ÍNDICE

SISTEMA ALIMENTACIÓN Y FILTRACIÓN	PÁG
BOMBAS DE ACEITE	110
BOMBAS DE COMBUSTIBLES MANUALES	48
BOMBAS DE COMBUSTIBLE ELÉCTRICAS Y MECÁNICAS	147
• GUÍA BOMBAS ELÉCTRICAS	149
• JUNTAS BOMBA	151
• JUNTAS VST	149
• KITS BOMBA	151
• MEMBRANAS	150
CABLES ACELERADOR	147
CARBURADORES COMPLETOS	142
• BOYAS	146
• GUÍA KITS CARBURADOR	145
• KITS AGUJAS	145
• KITS CARBURADOR	142
CONECTORES	49
FILTROS ACEITE	52
FILTROS AIRE	52
MANGUERAS COMBUSTIBLE	48
FILTROS DE COMBUSTIBLE	49
• BRACKETS	49
• RACORDS	51
GUÍA BOMBAS GASOLINA	153
PASAMAMPAROS	49

SISTEMA ELÉCTRICO	PÁG
ALTERNADORES	64
INTERRUPTORES	76
MOTORES DE ARRANQUE	59
MOTORES DE TRIM Y POWER TRIM	63
MÓDULOS Y LIMITADORES	75
REGULADORES Y RECTIFICADORES	65
SENSORES	75
SOLENOIDES Y RELÉS	62
• GUÍA DE RELÉS	63

SISTEMA DE ENCENDIDO	PÁG
BOBINAS	73
BUJIAS	77
CABLES PARA BUJÍA	81
CAJAS NEGRAS	68
GUÍA DE CAJAS NEGRAS, STARTOR, TRIGGER, REGULADOR	70
LLAVES DE ARRANQUE	76
MUELLES DE ARRANQUE	59
PLATINOS Y CONDENSADORES	77
STATORS	65
TIGGERS	67

SISTEMA DE REFRIGERACIÓN	PÁG
BOMBA DE AGUA	197
• ACOPLE INOX	200
• KITS REPARACIÓN BOMBA AGUA	197
• CUERPOS BOMBA DE AGUA	199
• KITS CUERPOS BOMPA AGUA	200
• GUIA BOMBAS DE AGUA	204
• TAPA	200
• BASES Y KITS	201
• JUNTAS	202
• KITS RETENES	212
• GUÍA KITS RETENES COLA	214
• GUÍA KITS RETENES ACEITE	215
IMPULSORES	203
TERMOSTATOS	160
• CUERPO	161
• KITS	161
• JUNTAS	162
• JUNTAS TAPA	163
• COMPONENTES CUERPO	163
• GUÍA TERMOSTATOS	161

PARTES DE MOTOR	PÁG
CIGÜEÑAL	118
• GUÍA DE CIGÜEÑAL	119
• GUÍA DE COJINETES, RETES Y AROS TÓRICOS	119
COJINETES	112
CORREAS	53
DESPIECE DE MOTOR (4 TIEMPOS)	82
DESPIECE DE MOTOR (2 TIEMPOS)	97
GUÍA AROS PARA PISTONES	116
GUÍA DE BIELAS, CIGÜEÑAL Y PISTÓN	113
GUÍA DE COJINETES	117
GUÍA DE PISTONES	114
GUÍA RETENES ACEITE	131
JUNTA ADMISIÓN	135
JUNTA BASE MOTOR	132
JUNTA COLECTOR	139
JUNTA CULATA	122
• GUÍA JUNTAS DE CULATA	128
JUNTA CULATÍN	138
JUNTA ESCAPE	139
JUNTA TAPA REFRIGERACIÓN	134
PISTONES, AROS, RODAMIENTOS Y BULONES	110
RETENES CULATA	131

COLAS Y COMPONENTES	PÁG
ÁNODOS	53
COLAS	165
COMPONENES DE COLA	216
DESPIECE COLAS	168
GUÍA KITS PIÑONES	192
GUÍA PIÑONES	192
EJES HÉLICE	196
HÉLICES Y GUIA DE APLICACIÓN	224
SELECTORES	194
• GUÍA DE SELECTORES	194
SILENBLOCKS	81
HERRAMIENTAS	166
GUÍA DE MANTENIMIENTO	**219**

TABLE OF CONTENTS

FUEL & FILTRATION SYSTEM	PÁG
OIL PUMP	110
PRIMER BULB MANUAL	48
ELECTRIC & MANUAL FUEL PUMP	147
• ELECTRIC FUEL PUMP GUIDE	149
• GASKET PUMP	151
• VST GASKET	149
• KITS PUMP	151
• DIAPHRAGMS	150
THROTLE CABLE	147
CARBURATOR	142
• FLOATS	146
• CARBURATOR SET GUIDE	145
• NEEDLE VALVE SETS	145
• KITS CARBURATOR	142
CONNETORS	49
FUEL LINE	48
OIL FILTERS	52
AIR FILTERS	52
FUEL FILTERS	49
• BRACKETS	49
• RACORDS	51
FUEL PUMP GUIDE	153
THRU HULL	49

ELECTRIC SYSTEM	PÁG
ALTERNATOR	64
CUT OFF SWITCHES	76
STARTER	59
TRIM & POWER TRIM	63
MODULES & LIMITATORS	75
REGULATOR & RECTIFIERS	65
SENDERS	75
SOLENOID & RELAYS	62
• RELAY GUIDE	63

IGNITION SYSTEM	PÁG
COILS	73
SPARK PLUGS	78
SPARK PLUGS WIRES	81
POWER PACKS	68
POWER PACKS, STARTOR, TRIGGER, REGULATOR GUIDE	70
IGNITION STARTER SWITCH	76
REWIND SPRING	59
POINTS & CONDENSERS	77
STATORS	65
TIGGERS	65

COOLING SYSTEM	PÁG
WATER PUMP	197
• PUMP CAPS	200
• WATER PUMP SERVICE KITS	197
• WATER PUMP HOUSING	199
• WATER PUMP HOUSING KITS	200

• WATER PUMP GUIDE 202
• WATER PUMP PLATE 200
• WATER PUMP BASE ASSEMBLY & KITS 201
• GASKETS 202
• SEAL KIT APPLICATIONS 212
• GEARCASE SEAL KITS APPLICATIONS 214
• OIL SEAL APPLICATIONS 215
IMPELLERS 203
THERMOSTAT 160
• HOUSING 161
• KITS 161
• GASKETS 162
• COVER GASKET 163
• HOUSING COMPONENTS 163
• THERMOSTAT GUIDE 161

ENGINE PARTS PÁG
CRANKSHAFT 118
• CRANKSHAFT GUIDE 119
• BEARINGS, OIL SEAL & O-RING GUIDE 119
BEARING 112
BELTS 53
ENGINE PARTS (4 STOKES) 82
ENGINE PARTS (2 STROKES) 97
STANDARD PISTON RINGS 116
CONNECTING ROAD, CRANKSHAFT & PISTON GUIDE 113
BEARING CUIDE 117
PISTON GUIDE 114
OIL SEAL GUIDE 131
INTAKE GASKET 135
GASKET CYLINDER 132
OIL PAN GUIDE 139
GASKET CYLINDER HEAD 122
• GASKET CYLINDER HEAD GUIDE 128
GASKET HEAD COVER 138
EXHAUST GASKET 139
GASKET, EXHAUST INNER COVER 134
PISTONS, RINGS, PINS & BEARING 110
GASKET CYLINDER SEALS 131

UNIT DRIVES & COMPONENTS PÁG
ANODES 53
GEARCASE 165
GEARHOUSING COMPONENTS 216
GEARCASE COMPONENTS 168
GEAR SETS 192
PINIONS APPLICATIONS 192
PROP SHAFT 196
PROPELLERS & GUIDE 224
CLUTCH DOGS 194
• CLUTCH DOGS APPLICATIONS 194
SILENBLOCKS 81
TOOLS 166
MANTENANCE GUIDE 219

INDICE

SISTEMA ALIMENTAZIONE E FILTRAZIONE PÁG
POMPE OLIO 110
POMPE COMBUSTIBILE 48
POMPE COMBUSTIBILE ELETTRICA E MANUALE 147
• GUIDA POMPA DE BENZINE ELETTRICA 149
• GUARNIZIONE POMPA 151
• GUARNIZIONE VST 149
• KITS POMPA 151
• MEMBRANA 150
CAVO ACCELLERATORE 147
CARBURATORE COMPLETO 142
• GALLEGGIANTI 146
• GUIDA KITS CARBURATORE 145
• KITS SPILLO CONICO 145
• KITS CARBURATORE 142
ATTACCO 49
TUBO BENZINA 48
FILTRI OLIO 52
FILTRI ARIA 52
FILTRI BENZINA 49
• SUPPORTO 49
• RACORDO 51
GUIDA POMPA BENZINA 153
PASSASCAFO 49

SISTEMA ELETRICO PÁG
ALTERNATORE 64
INTERRUTORI 76
MOTORINI AVVIAMENTO 59
MOTORINI TRIM E POWER TRIM 63
MODULI E LIMITATORI 75
REGOLATORI E RADDRIZZATORI 65
SENSORE 75
SOLENOIDI E RELE 62
• GUIDA DE RELE 63

SISTEMA DI ACCENSIONE PÁG
BOBINE 73
CANDELE 77
CAVO PER CANDELE 81
CENTRALINE 68
GUIDA DE CENTRALINE, STARTOR, TRIGGER, REGULATORE 70
CHIAVE DI AVVIAMENTO 76
MOLLE AVVIAMENTO 59
PUNTINE E CONDENSATORE 77
STATORS 65
TIGGERS 68

SISTEMA DI REFREDDAMENTO PÁG
POMPA ACQUA 197
• CAPUCCIO INOX 200
• KITS RICAMBI POMPA ACQUA 197
• CORPO POMPA ACQUA 199
• KITS CORPO POMPA ACQUA 200
• GUIDA POMPA ACQUA 204
• PIASTRA 200
• BASE POMPA ACQUA E KIT 201
• GUARNIZIONE 202
• GUIDA KIT TENUTA 212
• GUIDA KIT TENUTA PIEDE 214
• GUIDA KIT PARAOLIO 215
GIRANTI 203
TERMOSTATI 160
• CORPO 161
• KIT 161
• GUARNIZIONE 162
• GUARNIZIONE COPPERCHIO 163
• COMPONENTI CORPO 163
• GUIDA TERMOSTATO 161

PARTI DEL MOTORE PÁG
ALBERO MOTORE 118
• GUIDA ALBERO MOTORE 119
• GUIDA CUSCINETTO, TENUTE E FASCE 119
CUSCINETTO 112
CINGHIE 53
PARTI DEL MOTORE (4 TEMPI) 82
PARTI DEL MOTORE (2 TEMPI) 97
GUIDA FASCE PER PISTONI 116
GUIDA BIELLE, ALBERO MOTORE E PISTONE 113
GUIDA CUSCINETTO 117
GUIDA PISTONE 114
GUIDA PARAOLIO 131
GUARNIZIONE ASPIRAZIONE 135
GUARNIZIONE BASE MOTORE 132
GUARNIZIONE COLLETTORE 139
GUARNIZIONE TESTATA 122
• GUIDA GUARNIZIONE TESTATA 128
GUARNIZIONE COPERCHIO TESTA 138
GUARNIZIONE SCARICO 139
GUARNIZIONE COPERCHIO REFREDAMENTO 134
PISTONE, FASCE, CUSCINETTI E BULLONI 110
PARAOLIO COPERCHIO TESTATA 130

PIEDI E COMPONENTI PÁG
ANODI 53
PIEDI 165
COMPONENTI DI PIEDI 214
PARTI PIEDI 168
GUIDA CUSCINETTO 192
GUIDA KIT CUSCINETTO 192
ASSE ELICHE 196
ELICHE E GUIDA APPLICAZIONE 224
SELETTORI 194
• GUIDA SELETTORI 194
SILENBLOCKS 81
ATTREZZI 166
GUIDA MANUTENZIONE 219

CONECTORES COMBUSTIBLE
FUEL FITTINGS
ATTACCHI BENZINA

BOMBA DE COMBUSTIBLE
PRIMER BULB
POMPA BENZINA

Ref.	Manguera Hose Tubo	Envase Pack Qnt
GS31090	5/16”	1 x blister
GS31095	3/8”	1 x blister
GS31187	1/4”	1 x blister
CEF500621	8 mm	1 x bolsa / bag / borsa

GOLDENSHIP

Universal / Universal / Universale

cef

CEF500621

Fabricada con elastómeros termoplásticos inyectados, resistentes al alcohol y rayos UV.
Premium quality bulb resistence to alcohol as well as UV and ozone.
Fabbricata con elastomero termoplastico, resistente ai solventi e ai raggi UV.

Ref.	R.O. OEM	Manguera Hose Tubo	Envase (x blister) Pack (x blister) Qnt (x blister)
SIE18-8004	Mercury/Mariner 98396A38	5/16”	1
	Johnson/Evinrude 174511		
SIE18-8005	Mercury/Mariner 98396A38	3/8”	1
	Johnson/Evinrude 174511		

Sierra

UNIVERSAL
Fabricada con elastómeros termoplásticos inyectados, resistentes al alcohol y rayos UV.
UNIVERSAL Premium quality bulb resistence to alcohol as well as UV and ozone.
UNIVERSALE
Fabbricata con elastomero termoplastico, resistente ai solventi e raggi UV.

Ref.	R.O.
REC858763	858763

NEW

MOTORES / ENGINES / MOTORI
30 HP - 90 HP

LÍNEA DE COMBUSTIBLE
FUEL LINE ASSEMBLY
TUBO CARBURANTE

Ref.	R.O. OEM	Manguera Hose Tubo	Envase (x bolsa) Pack (x bag) Qnt (x borsa)
GS31189		3/8”	1

GOLDENSHIP

MADE IN THE USA

Bomba GS31188.
Con 2 m de manguera resistente al alcohol.
Primer GS31188. With 2 m alcohol resistant hose.
Pompa GS31188 con 2 m di tubo resistente ai solventi.

Ref.	R.O. OEM	Manguera Hose Tubo	Envase (x bolsa) Pack (x bag) Qnt (x borsa)
GS31097		3/8”	1
GS31099		8 mm	1
SIE18-8013		5/16”	1
SIE18-8015		3/8”	1
CEF500600		8 mm	1

Universal. Con 2 m de manguera resistente al alcohol.
Universal. With 2 m alcohol resistant hose.
Universale con 2 m di tubo resistente ai solventi.

GOLDENSHIP

MADE IN THE USA

GS31097

GOLDENSHIP

GS31099

Sierra

SIE18-8013, SIE18-8015

cef

CEF500600

MANGUERA DE COMBUSTIBLE
FUEL HOSE
TUBO BENZINA

Ref.	Ø Int	Largo Lengh Long	Envase Pack Qn
TRI305-0566	5/16” = 7,92 mm	15 m	Caja / Box / Cassa
TRI305-0386	3/8” = 9,53 mm	15 m.	Caja / Box / Cassa

MADE IN THE USA

CE CERTIFIED

TRIDENT

Manguera Trident para líneas de combustible. Con refuerzo termoplástico que le permite excelente flexibilidad y resistencia a los rayos UV. Color gris. Resistente al alcohol. **Especialmente indicado para motores fueraborda.** Cumple las normas: SAEJ1527, ISO-8469 Tipo B1 y Certificación CE. Garantía: 3 años.
Marine fuel hose (distribution and vent) **for outboards.** Fuel resistant thermo-plastic formulation with 2 spiral reinforcement provides excelent bendability and resistance to UV, aging and permeation by all marine fuels (gasoline/petrol and diesel) including alcohol blends.
Meets or exceeds: SAEJ1527, ISO-8469 Tipo B1 & Certification CE.
Warranty: 3 years.
Tubo Trident per linea combustibile. Con rinforzo termoplastico che gli permette un’eccellente flessibilità e resistenza ai raggi UV. Colore grigio. Resistente ai solventi. **Indicato per i motori fuoribordo.**
Conforme alla norma: SAEJ1527, ISO-8469 Tipo B1 e Certificazione CE.
Garanzia: 3 anni.

PASAMAMPAROS
THRU HULL
PASSASCAFO

Ref.	R.O. OEM	Manguera Hose Tubo	Envase (x blister) Pack (x blister) Qnt (x blister)
GS31064		3/8"	1

GOLDENSHIP

Para atravesar mamparos de hasta 12 mm. Fabricado en latón.
For bulkhead up to 12 mm. Made in machined brass.
Per attraversare paratie fino a 12 mm. Fabbricato in ottone.

CONECTORES
CONNECTOR
ATTACCO

Ref.	Rosca Thread Passo	Envase (x blister) Pack (x skinpack) Qnt (x Blister)
GS31068	1/4" NPT	1

CODO DEPOSITO
Fabricado en latón.
TANK ELBOW
Made in machined brass.
GOMITO SERBATOIO
Fabbricato in ottone.

GOLDENSHIP

Ref.	Rosca Thread Passo	Envase (x blister) Pack (x skinpack) Qnt (x Blister)
GS31069	1/4" NPT	1

CONECTOR "T"
Para conectar dos motores a un sólo depósito, o viceversa. Fabricado en latón.
CONNECTOR "T"
To connect two motors to a single deposit, or vice versa. Made in machined brass.
CONNETTORE "T"
Per collegare due motori ad un solo serbatoio, o viceversa. Fabbricato in ottone.

GOLDENSHIP

CONECTOR COMBUSTIBLE
FUEL CONNECTOR
ATTACCO COMBUSTIBLE

Ref.	R.O. OEM	Manguera Hose Tubo	Envase (x blister) Pack (x blister) Qnt (x blister)
GS31026	22-142131	1/4"	1
GS31027	22-13563T-3	5/16"	1
GS31028	22-13563T-3	3/8"	1

GOLDENSHIP

Ref.	R.O. OEM	Manguera Hose Tubo	Envase (x blister) Pack (x blister) Qnt (x blister)
GS31082	22-13563T 7	3/8"	1

Modelos Nuevos. 4HP hasta V6, (1998+)
New Models. 4HP to V6 (1998+)
Nuovi Modelli. Dal 4HP al V6 (1998+)

Ref.	R.O. OEM	Manguera Hose Tubo	Envase (x blister) Pack (x blister) Qnt (x blister)
GS31078	22831T03	3/8"	1
GS31079	30185T3	5/16"	1
GS31080	30185T3	3/8"	1

GOLDENSHIP

GS31078

GS31079-GS31080

TOMA TANQUE COMBUSTIBLE
FUEL TANKS CONNECTOR
FILETTATURA PER SERBATOIO BENZINA

Ref.	Rosca Thread Passo			Envase (x blister) Pack (x skinpack) Qnt (x Blister)
GS31022	1/4" NPT	Mod. Standard	Vertical / Verticale	1
GS31023	1/4" NPT	Mod. New	Vertical / Verticale	1
GS31025	1/4" NPT			1
GS31081	1/4" NPT	Mod. New		1

Fabricado en latón.
Made in machined brass.
Fabbricato in ottone.

GOLDENSHIP

GS31022-GS31023

GS31025-GS31081

FILTROS COMBUSTIBLE Y ELEMENTOS
FUEL FILTERS AND ELEMENTS
SUPPORTI, FILTRI BENZINA E RACCORDI

BRACKET / BRACKET / SUPPORTO

Ref.	Braket Bracket Supporto	Tomas NTPF Ports Filetto
REC25000	Aluminio / Aluminium / Alluminio	1/4 "
REC25010	INOX AISI316 / S.S. AISI316	1/4"
REC25020	Aluminio / Aluminium / Alluminio	3/8 "
REC25030	INOX AISI316 / S.S. AISI316	3/8"
RECOBBRACKET	Plástico / Plastic / Plastica	1/4 "

Con 2 tapones de bronce y 2 tubos de extensión.
(2 entradas y 2 salidas).
With 2 brass plugs and 2 extension tubes.
(2 inputs & 2 outputs).
Con 2 tappi di bronzo e 2 tubi di estensione.
(2 ingressi entrata carburante e 2 uscite carburante).

REC25000 - REC25020

REC25010 - REC25030

RECOBBRACKET

FILTRO COMBUSTIBLE SEPARADOR DE AGUA
WATER SEPARATING FUEL FILTER
FILTRO SEPARATORE ACQUA-BENZINA

RACOR

Ref.	Micras Micron Micron	Altura Height Altezza
REC24942	10	4-7/16”
REC35-802893Q01	10	3-3/4”
REC855686	28	4-7/16”
REC35-802893Q	25	3-3/4”
RACPFF5510	10	4-7/16”

RACPFF5510

RECmar

REC24942

REC35-802893Q01

REC855686

REC35-802893Q

FILTRO ORIGINAL
OEM FILTER
FILTRO BENZINA ORIGINALE

Ref.	Micras Micron Micron	Altura Height Altezza
RM35-802893Q	10	3-3/4”

Ref.	R.O.
REC35-18458Q4	35-18458Q4

MOTORES / ENGINES / MOTORI
V-135 DFI 2.5L (2001-03)
V-150 DFI/EFI 2.5L (2000-10)
V-175 DFI/EFI 2.5L (2000-03)
V-200/200 EFI 2.5/3.0L (2000-10)
225 DEFI/EFI 3.0L (1998-09)
250 EFI 3.0L (1998-09)
200-210-250 HP Jet Drive (2001-10)
200-225-300 HP Mercury Racing (2001-05)

FILTRO CON BRACKET
OEM FILTER WITH BRACKET
FILTRO BENZINA CON SUPPORTO

Ref.	Micras Micron Micron	Tomas NPTF Ports Filetto	Flujo Flow Flusso
REC24950	25	1/4”	50 GPH
REC24952	10	1/4”	50 GPH

Bracket de Aluminio. Con 2 tapones de bronce y 1 tubo de extensión.
Cast Aluminium Bracket. With 2 brass plugs & 1 extension tube.
Supporto in alluminio. Con 2 tappi di bronzo e 1 tubo di estensione.

FILTRO DECANTADOR COMBUSTIBLE CON VASO TRANSPARENTE
COMPLETE FUEL FILTER WITH TRANSPARENT BOWL
FILTRO DI DECANTAZIONE BENZINA COMPLETO CON VASCHETTA TRASPARENTE

Filtro Bracket Aluminio Alluminum bracket filter Filtro con Bracket in alluminio	Filtro Bracket Plástico Plastic Bracket filter Filtro con Bracket in plastica	Elemento Element Cartuccia
RAC320R-RAC-01	RAC320R-RAC-03	RACS3213
		LENS3213

RACOR

Incluye soporte
Includes bracket
Con supporto

LENS3213

RACS3213

Filtro completo Complet filter Filtro completo	Cartucho recambio Replacement element Cartuccia di ricambio	Capacidad Máx. Max. Capacity Capacità massima
REC90794-46866	REC90794-46868	117l/h

RECmar

LLAVE PARA FILTRO
FILTER KEY
CHIAVE DA FILTRO

Ref.
RECYS-225-15

Filtro completo Complet filter Filtro completo	Cartucho recambio Replacement element Cartuccia di ricambio	Capacidad Máx. Max. Capacity Capacità massima
RECOBFILTER	RECOBELEMENT	150 l/h
	LENS3213	

RECmar

Filtro completo Complet filter Filtro completo	Micras Micron Micron	Rosca Thread Filettatura	Capacidad Máx. Max. Capacity Capacità massima
RAC490R-RAC-01	10	3/8” NPTF	340 l/h

RACOR

CON PURGADOR. Para motores fueraborda superiores a 150 HP.
WITH PRIMMING PUMP. For outboards engines more than 150 HP.
CON POMPETTA PER RIEMPIRE IL FILTRO. Per motori fuoribordo superiori a 150 hp.

Cartucho recambio
Replacement element
Cartuccia di ricambio

Ref.	R.O. / OEM
RACS3227	YMM-2E227-00
	YMM-2E227-01
LENS3227	

ADAPTADOR LÍNEA COMBUSTIBLE
FUEL LINE COUPLER
ADATTATORE LINIA COMBUSTIBILE

Ref.	R.O.
REC22-8M0001721	22-8M0001721

NEW

RACORS
RACORS
RACCORDO

Ref.	Rosca Thread Passo	Manguera Hose Tubo	Envase (x blister) Pack (x skinpack) Qnt (x blister)
GS31065	1/4" NPT	3/8" = 9.5 mm	2
GS31166	1/4" NPT	5/16" = 7.9 mm	2
GS31155	3/8" NPT	3/8" = 9.5 mm	2
GS31156	3/8" NPT	5/16" = 7.9 mm	2
GS31157	3/8" NPT	1/4" = 6.4 mm	2

Racor 90º fabricado en latón.
Made in machined brass.
Raccordo 90º prodotto in ottone

GOLDENSHIP

Ref.	Rosca Thread Passo	Manguera Hose Tubo	Envase (x blister) Pack (x skinpack) Qnt (x blister)
GS31066	1/4" NPT	5/16" = 7.9 mm	2
GS31067	1/4" NPT	3/8" = 9.5 mm	2

Fabricado en latón.
Made in machined brass.
Prodotto in ottone

GOLDENSHIP

Ref.	R.O.
REC22-424254	22-424254

NEW

MOTORES / ENGINES / MOTORI
40- 200 HP

VÁLVULA
CHECK VALVE
VALVOLA

Ref.	R.O.
REC22-8189941	22-8189941

NEW

MOTORES / ENGINES / MOTORI
60 - 275 HP

FILTRO COMBUSTIBLE
FUEL FILTER
FILTRO COMBUSTIBILE

Ref.	Capacidad Capacity Capacità	Manguera Hose Tubo	Envase (x blister) Pack (x skinpack) Qnt (x blister)
GS31001	50 lt/h	6-8 mm	1 x skinpack
GS31002	150 lt/h	8-10 mm	1 x skinpack

Filtro transparente para gasolina o gasoil.
Transparent plastic in line filter for petrol and diesel.
Filtro trasparente per benzina.

GOLDENSHIP

Ref.	Manguera Hose Tubo	Envase (x blister) Pack (x skinpack) Qnt (x blister)
GS30435	6, 8, 10 mm	1

GOLDENSHIP

FILTRO TRANSPARENTE
De metal y cristal. Racors para mangueras de 6-8-10 mm.
TRANSPARENT FILTER
Clear body permits visual inspection. Racors 6-8-10 mm.
FILTRO TRASPARENTE
Di metallo e vetro. Montaggio in linea. Raccordi per tubo da 6-8-10 mm.

Ref.	Ø Manguera Ø Hose ØTubo
REC40145	1/4"
REC40155	5/16"
REC40165	3/8"
REC40135	5/16" Entrada In Entrata
	3/8" Salida Out Uscita

De plástico / Plastic / In plastica

Ref.	R.O.
REC35-80365M	646-24251-02

MOTORES / ENGINES / MOTORI
2-8 HP 2T / 2 Strokes / 2 Tempi
8-15 HP 4T / 4 Strokes / 4 Tempi

Ref.	R.O.
REC35-87946Q04	35-87946Q3, 35-87946Q04

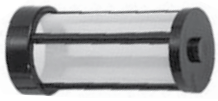

MOTORES / ENGINES / MOTORI
6 HP - 60 HP

Ref.	R.O.
REC65L-24563-00	35-888289T2

MOTORES / ENGINES / MOTORI
75 HP 4T / 4 Strokes / 4 Tempi (2000+)
90 HP 4T / 4 Strokes / 4 Tempi (2000+)
115 HP EFI 4T / 4 Strokes / 4 Tempi (2001+)
225 HP EFI 4T / 4 Strokes / 4 Tempi

Ref.	R.O.
REC6C5-13915-00	35-881323001

NEW

MOTORES / ENGINES / MOTORI
75 - 100HP (EFI 4T / 4 Strokes / 4 Tempi)

Ref.	R.O.
REC35-879885T	35-879885T

MOTORES / ENGINES / MOTORI
4T / 4 Strokes / 4 Tempi
135/150/175 HP Verado (1B227000+)
200/225 HP Verado (S/P 0T980000+)
250/275/300 HP Verado (S/N 0T801000+)
30HP - 115HP EFI

Ref.	R.O.
REC1399-3938	1399-3938

MOTORES / ENGINES / MOTORI
Para carburadores
For carburators
Per carburatori
AJ, KA, KB, KC, KD, WM, WMC

Ref.	R.O.
PAF15-07080000	35-826964T

NEW

MOTORES / ENGINES / MOTORI
8K / 15K / 25K / 40K

Ref.	R.O.
REC68V-24563-00	881540

MOTORES / ENGINES / MOTORI
75/80/90 HP 4T / 4 Strokes / 4 Tempi
80/90/100/115 HP EFI 4T / 4 Strokes / 4 Tempi

Ref.	R.O.
RAC31871	35-884380T, 35-8M0020349 8M0060041

NEW

RACOR

MOTORES / ENGINES / MOTORI
Verados
75, 90, 115 DFI 3 cyl
200 HP DFI
225 HP DFI incl. 3.0L DFI

Ref.	R.O.
PAF4-05000300	35-16248

MOTORES / ENGINES / MOTORI
4-9.8 HP 2T / 2 Strokes / 2 Tempi
4-25 HP 4T / 4 Strokes / 4 Tempi

Ref.	R.O.
REC35-877565T	35-877565T1

MOTORES / ENGINES / MOTORI
4T / 4 Strokes / 4 Tempi

25HP	(1998+)	40 Carb. 3Cyl.	(2002+)
30HP	(99-01)	50HP 4cyl.	(01-02)
30HP 3cyl.	(99-01)	60HP - 75HP	(2000+)
40HP	(98-01)	90HP 4T	(2000+)
40HP 4cyl.	(01-02)		

Ref.	R.O.
REC66K-13915-00	808504, 808504T1

MOTORES / ENGINES / MOTORI
150 - 250HP EFI
Sport Jet 240

NEW

FILTROS AIRE
AIR FILTERS
FILTRI ARIA

Ref.	R.O.
REC35-853333T	35-853333T

MOTORES / ENGINES / MOTORI
115 DFI (2000)
130 DFI (1998+)
150 DFI (1998+)
175 DFI (2001+)
200 DFI (1998-02)
225 DFI (1998-02)

Ref.	R.O.
REC35-896247	35-896247

MOTORES / ENGINES / MOTORI
135/150/175 HP Verado
NºSº (1B227000+)

Ref.	R.O.
REC35-893318T02	35-893318T01, 35-893318T02

MOTORES / ENGINES / MOTORI
200/225 HP Verado NºSº (0T980000+)
250/275 HP Verado NºSº (0T801000+)

Ref.	R.O.
RM35-8M0082911	35-897575T01, 35-897575T02

MOTORES / ENGINES / MOTORI
75 / 80 / 90 / 100 / 115 EFI

NEW

FILTROS ACEITE
OIL FILTERS
FILTRI OLIO

Ref.	R.O.
REC6G8-13440-00	825467T02/A1

MOTORES / ENGINES / MOTORI
9.9 HP S/N (0H00058-0H017099) (1995-98)
8 HP (BONDENSEE)
9.9 HP 232 cc

Ref.	R.O.
REC35-822626Q03	35-822626Q1, 35-822626Q03

MOTORES / ENGINES / MOTORI
8 HP (2001-04) 323cc
9.9 HP (1999-04) 323cc
13.5 HP / 15 HP (1998+) 323cc
15 HP
20 HP (2008+) 492cc
30 HP (2006+) 492cc

Ref.	R.O.
REC35-822626Q04	35-822626Q2, 35-822626Q04

MOTORES / ENGINES / MOTORI
25 HP (1998-05) 498cc
30 HP (1999-05) 747cc
40/50/60 HP (1995+)
75/90 HP Carburated (2000-05)
100/115EFI (S/N 1B366822+)

Ref.	R.O.
REC35-877761Q01	35-877761Q01, 35-877761K01

MOTORES / ENGINES / MOTORI
75/80/90/115 HP (S/N 1B366823+)
(2006+)

NEW

Ref.	R.O.
REC35-896546T	35-896546T 35-877767K01 35-877767Q01

MOTORES / ENGINES / MOTORI
Verado 135/150/175/200 (S/N 1B227000+)
(4 en línea / 4 in line / 4 in rete)

Ref.	R.O.
REC35-883701K01	35-883701K01, 35-877769Q01

MOTORES / ENGINES / MOTORI
Verado 200/225/250/275/300 HP
(6 en línea / 6 in line / 6 in rete)

Ref.	R.O.
REC35-822626Q15	35-822626T7, 35-822626Q15

MOTORES / ENGINES / MOTORI
225 HP EFI. (NO / NOT / NON Verado)

CORREAS
BELTS
CINGHIE

Ref.	R.O.
REC892318	57-892318, 8M0012623 8M0026410

MOTORES / ENGINES / MOTORI

75 DFI (2005-06)
90 DFI (2005-06)
150 DFI (2004-06)

Ref.	R.O.
REC828507Q4	57-828507Q4

MOTORES / ENGINES / MOTORI

135 DFI (1998+)
150 DFI (1998+)
175 DFI (2001+)

Ref.	R.O.
REC57-880566Q14	57-880566Q14

MOTORES / ENGINES / MOTORI

135 - 400HP, VERADOS

Ref.	R.O.
REC57-828507Q01	57-828507 1

MOTORES / ENGINES / MOTORI

200 DFI (1997+)
225 DFI (1998+)

Ref.	R.O.
PAF15-07000002	57-835392Q

NEW

MOTORES / ENGINES / MOTORI

8 HP (Bodensee) 4 Tiempos / Strokes / Tempi (inter.)
9.9 HP (323 cc) 4 Tiempos / Strokes / Tempi
13.5 HP 4 Tiempos / Strokes / Tempi (inter.)
15 HP 4 Tiempos / Strokes / Tempi

Ref.	R.O.
PAF25-05000023	831294, 57-8M0065179

NEW

MOTORES / ENGINES / MOTORI

25 - 60 HP 4 Tiempos / Strokes / Tempi

Ref.	R.O.
PAF8-05000004	57-895120

NEW

MOTORES / ENGINES / MOTORI

8 HP 4 Tiempos / Strokes / Tempi (209 cc)
9.9 HP 4 Tiempos / Strokes / Tempi (209 cc)

ÁNODOS
ANODES
ANODI

Ref.	R.O.		Peso Weight Peso
CM34762	34762A1	Cinc / Zinc / Zinco	0,24 kg
CM34762A	34762A1	Aluminio / Aluminium / Alluminio	0,09 kg

Ánodo cola
Drive anode
Anodo piede

Ref.	R.O.		Peso Weight Peso
CM34127	34127T2	Cinc / Zinc / Zinco	0,59 kg
CM34127A	34127T2	Aluminio / Aluminium / Alluminio	0,22 kg

Ánodo cola
Drive anode
Anodo piede

Ref.	R.O.		Peso Weight Peso
CM892227	893404	Cinc / Zinc / Zinco	0,50 kg
CM892227A	893404	Aluminio / Aluminium / Alluminio	0,20 kg

MOTORES / ENGINES / MOTORI

Verado V6

Ref.	R.O.		Peso Weight Peso
CM880653	880653	Cinc / Zinc / Zinco	0,50 kg
CM880653A	880653	Aluminio / Aluminium / Alluminio	0,20 kg

MOTORES / ENGINES / MOTORI

Verado V6

Ref.	R.O.		Peso Weight Peso
CM818298	818298A1	Cinc / Zinc / Zinco	0,66 kg
CM818298A	818298A1	Aluminio / Aluminium / Alluminio	0,26 kg

MOTORES / ENGINES / MOTORI

Ánodo Transom
Gimbal anode
Anodo Transom

Ref.	R.O.		Peso Weight Peso
CM43396	43396	Cinc / Zinc / Zinco	0,66 kg
CM43396A	43396	Aluminio / Aluminium / Alluminio	0,25 kg

MOTORES / ENGINES / MOTORI

Ánodo Transom
Gimbal anode
Anodo Transom

Ref.	R.O.		Peso Weight Peso
CM89949	89949A1	Cinc / Zinc / Zinco	1,07 kg
CM89949A	89949A1	Aluminio / Aluminium / Alluminio	0,42 kg

MOTORES / ENGINES / MOTORI

Ánodo Transom
Gimbal anode
Anodo Transom

Ref.	R.O.		Peso Weight Peso
CM825271	8252711	Cinc / Zinc / Zinco	0,29 kg
CM825271A	8252711	Aluminio / Aluminium / Alluminio	0,11 kg

MOTORES / ENGINES / MOTORI

25 / 30 / 40 HP 4 Tiempos / Strokes / Tempi

Ref.	R.O.		Peso Weight Peso
CM8239121	8239121	Cinc / Zinc / Zinco	0,91 kg

MOTORES / ENGINES / MOTORI
50 / 75 / 90 / 100 HP
Super America 80HP / 155 HP

Ref.	R.O.		Peso Weight Peso
CM826134	826134	Cinc / Zinc / Zinco	0,25 kg
CM826134A	826134	Aluminio / Aluminium / Alluminio	0,10 kg

Ánodo cola
Drive anode
Anodo piede

Ref.	R.O.		Peso Weight Peso
CM09411	09411	Cinc / Zinc / Zinco	0,05 kg

MOTORES / ENGINES / MOTORI
4 - 7 HP

Ref.	R.O.		Peso Weight Peso
CM47820	47820	Cinc / Zinc / Zinco	0,33kg

MOTORES / ENGINES / MOTORI
20 HP

Ref.	R.O.		Peso Weight Peso
CM42121A2	42121A2	Cinc / Zinc / Zinco	0,30kg

Ánodo cola
Drive anode
Anodo piede

Ref.	R.O.		Peso Weight Peso
CM17264	17264T2	Cinc / Zinc / Zinco	0,46kg

Formula 60 HP
Ánodo cola / Drive

Ref.	R.O.		Peso Weight Peso
CM822157T2	822157T2	Cinc / Zinc / Zinco	0,48 kg

Ánodo cola
Drive anode
Anodo piede

Ref.	R.O.		Peso Weight Peso
CM984325	98432Q6	Cinc / Zinc / Zinco	0,42 kg
CM984325A	98432Q6	Aluminio / Aluminium / Alluminio	0,11 kg

Ánodo cola
Drive anode
Anodo piede

Ref.	R.O.		Peso Weight Peso
CM822777	822777Q1	Cinc / Zinc / Zinco	0,67kg

Ánodo cola
Drive anode
Anodo piede

Ref.	R.O.		Peso Weight Peso
CM942860	94286T1	Cinc / Zinc / Zinco	0,28kg

Fueraborda 25HP. Ánodo cola.
Outborad 25 HP. Drive anode.
Fuoribordo 25 HP. Anodo piede.

Ref.	R.O.		Peso Weight Peso
CM76214	76214	Cinc / Zinc / Zinco	0,28 kg
CM762145A	76214	Aluminio / Aluminium / Alluminio	0,11 kg

Ánodo cola
Drive anode
Anodo piede

Ref.	R.O.		Peso Weight Peso
CM89026	89026	Cinc / Zinc / Zinco	0,23kg

Ánodo cola
Drive anode
Anodo piede

Ref.	R.O.		Peso Weight Peso
CM67F-11325-00	894079002	Cinc / Zinc / Zinco	0,07kg

Fueraborda 90 HP. 4T. Ánodo cola.
Outborad 90 HP. 4 Strokes. Drive anode.
Fuoribordo 90 HP. 4 Tempi. Anodo piede.

Ref.	R.O.		Peso Weight Peso
CM826887M	826887M	Cinc / Zinc / Zinco	0,33kg

Ánodo motor.
Anode engine.
Anodo motore.

Ref.	R.O.		Peso Weight Peso
CM820503	8205031	Cinc / Zinc / Zinco	0,02kg

Ref.	R.O.		Peso Weight Peso
TEN00800	31640	Cinc / Zinc / Zinco	0,480kg

MOTORES / ENGINES / MOTORI
50HP

Ref.	R.O.		Peso Weight Peso
TEN00801	34127	Cinc / Zinc / Zinco	0,600kg

MOTORES / ENGINES / MOTORI
80 - 140 HP

Ref.	R.O.		Peso Weight Peso
TEN00802	94286	Cinc / Zinc / Zinco	0,270kg

MOTORES / ENGINES / MOTORI
25 HP

Ref.	R.O.		Peso Weight Peso
TEN00803	47820	Cinc / Zinc / Zinco	0,310kg

MOTORES / ENGINES / MOTORI
20 HP

Ref.	R.O.		Peso Weight Peso
TEN00804	46399	Cinc / Zinc / Zinco	0,400kg

MOTORES / ENGINES / MOTORI
50 - 140 HP

Ref.	R.O.		Peso Weight Peso
TEN00805	46396	Cinc / Zinc / Zinco	0,670kg

MOTORES / ENGINES / MOTORI
25 - 50 - 60- 75 - 80 - 90 - 100 - 115 - 190 HP

Ref.	R.O.		Peso Weight Peso
TEN00806	43994	Cinc / Zinc / Zinco	0,900kg

MOTORES / ENGINES / MOTORI
Alpha Gen II, Bravo.

Ref.	R.O.		Peso Weight Peso
TEN00806BIS	821631	Cinc / Zinc / Zinco	0,890kg

Ref.	R.O.		Peso Weight Peso
TEN00807	55989	Cinc / Zinc / Zinco	0,100kg

MOTORES / ENGINES / MOTORI
Alpha One, Bravo I.

Ref.	R.O.		Peso Weight Peso
TEN00808	34762	Cinc / Zinc / Zinco	0,270kg

Ref.	R.O.		Peso Weight Peso
TEN00809	85824	Cinc / Zinc / Zinco	0,030kg

MOTORES / ENGINES / MOTORI
4.5 - 9 HP

Ref.	R.O.		Peso Weight Peso
TEN00810	42121	Cinc / Zinc / Zinco	0,030kg

MOTORES / ENGINES / MOTORI
6 - 9.9 HP

Ref.	R.O.		Peso Weight Peso
TEN00811	09411	Cinc / Zinc / Zinco	0,050kg

MOTORES / ENGINES / MOTORI
4.5 - 7 HP

Ref.	R.O.		Peso Weight Peso
TEN00812	98432	Cinc / Zinc / Zinco	0,350kg

MOTORES / ENGINES / MOTORI
25 HP (1990+)

Ref.	R.O.		Peso Weight Peso
TEN00813	823912-1	Cinc / Zinc / Zinco	0,010kg

MOTORES / ENGINES / MOTORI
4.5 HP

Ref.	R.O.		Peso Weight Peso
TEN00814	821629	Cinc / Zinc / Zinco	0,700kg

MOTORES / ENGINES / MOTORI
Alpha One, Alpha Gen II.

Ref.	R.O.		Peso Weight Peso
TEN00815	821630	Cinc / Zinc / Zinco	0,980kg

MOTORES / ENGINES / MOTORI
Bravo I, II, III.

Ref.	R.O.		Peso Weight Peso
TEN00816	818298	Cinc / Zinc / Zinco	0,640kg

MOTORES / ENGINES / MOTORI
40 a V6 135 - 150 - 175 HP.
Verado.

Ref.	R.O.		Peso Weight Peso
TEN00817	806189	Cinc / Zinc / Zinco	0,120kg

MOTORES / ENGINES / MOTORI
Pistón Alpha
Piston Alpha
Pistone Alpha

Ref.	R.O.		Peso Weight Peso
TEN00818	806190	Cinc / Zinc / Zinco	0,340kg

MOTORES / ENGINES / MOTORI
Pistón Bravo
Piston Bravo
Pistone Bravo

Ref.	R.O.		Peso Weight Peso
TEN00819	806105	Cinc / Zinc / Zinco	0,230kg

MOTORES / ENGINES / MOTORI
Alpha One, Alpha Gen II.

Ref.	R.O.		Peso Weight Peso
TEN00820	76214-5	Cinc / Zinc / Zinco	0,340kg

MOTORES / ENGINES / MOTORI
Alpha.

Ref.	R.O.		Peso Weight Peso
TEN00821	89949	Cinc / Zinc / Zinco	1,180kg

MOTORES / ENGINES / MOTORI
150 - 200 HP.

Ref.	R.O.			Peso Weight Peso
TEN00822	825271		Cinc / Zinc / Zinco	0,290kg

MOTORES / ENGINES / MOTORI
30 - 40 HP.

Ref.	R.O.			Peso Weight Peso
TEN00823	823912	Ø 20 mm	Cinc / Zinc / Zinco	0,010kg
TEN00824	823913	Ø 24 mm	Cinc / Zinc / Zinco	0,020kg

Ref.	R.O.			Peso Weight Peso
TEN00825	826134		Cinc / Zinc / Zinco	0,240kg

MOTORES / ENGINES / MOTORI
75 HP - V6 40-50-115 EFI 4T / Strokes / Tempi

Ref.	R.O.			Peso Weight Peso
TEN00826	76214		Cinc / Zinc / Zinco	0,310kg

MOTORES / ENGINES / MOTORI
Verado - Bravo

Ref.	R.O.			Peso Weight Peso
TEN00827	17264		Cinc / Zinc / Zinco	0,510kg

MOTORES / ENGINES / MOTORI
Formula 60 HP.

Ref.	R.O.			Peso Weight Peso
TEN00828	806188		Cinc / Zinc / Zinco	0,170kg

MOTORES / ENGINES / MOTORI
Bravo I, III.

Ref.	R.O.			Peso Weight Peso
TEN00829	822157		Cinc / Zinc / Zinco	0,440kg

MOTORES / ENGINES / MOTORI
F25 - F50

Ref.	R.O.			Peso Weight Peso
TEN00830	822777		Cinc / Zinc / Zinco	0,680kg

MOTORES / ENGINES / MOTORI
35 HP, V6 - MCM

Ref.	R.O.			Peso Weight Peso
TEN00831	826887M		Cinc / Zinc / Zinco	0,020kg

Ánodo motor.
Anode engine.
Anodo motore.

Ref.	R.O.			Peso Weight Peso
TEN00832	80653		Cinc / Zinc / Zinco	0,490kg

MOTORES / ENGINES / MOTORI
Verado 215- 275

Ref.	R.O.			Peso Weight Peso
TEN00833	893404		Cinc / Zinc / Zinco	0,110kg

MOTORES / ENGINES / MOTORI
Verado 215- 275

Ref.	R.O.			Peso Weight Peso
TEN00834	875208		Cinc / Zinc / Zinco	0,030kg

MOTORES / ENGINES / MOTORI
4T - 4 - 9.9 HP

Ref.	R.O.		Peso Weight Peso
TEN00835	76214-4	Cinc / Zinc / Zinco	0,260kg

Ánodo motor.
Anode engine.
Anodo motore.

TECNOSEAL save your dreams

Ref.	R.O.		Peso Weight Peso
TEN00836	865182	Cinc / Zinc / Zinco	0,520kg

MOTORES / ENGINES / MOTORI
Bravo III

TECNOSEAL save your dreams

Ref.	R.O.		Peso Weight Peso
TEN00837	8M0012083	Cinc / Zinc / Zinco	0,330kg

MOTORES / ENGINES / MOTORI
Verado 350 CI - 6 Cil. 4T

TECNOSEAL save your dreams

Ref.	R.O.		Peso Weight Peso
TEN00838	847635001	Cinc / Zinc / Zinco	1,000kg

MOTORES / ENGINES / MOTORI
Verado 350 CI - 6 Cil. 4T

TECNOSEAL save your dreams

Ref.	R.O.		Peso Weight Peso
TEN00839	853762	Cinc / Zinc / Zinco	0,150kg

Ánodo motor.
Anode engine.
Anodo motore.

TECNOSEAL save your dreams

Ref.	R.O.		Peso Weight Peso
TEN00840	8239121	Cinc / Zinc / Zinco	0,510kg

Ánodo motor.
Anode engine.
Anodo motore.

TECNOSEAL save your dreams

Ref.	R.O.		Peso Weight Peso
TEN00841	804043	Cinc / Zinc / Zinco	0,040kg

Ánodo motor.
Anode engine.
Anodo motore.

TECNOSEAL save your dreams

Ref.	R.O.		Peso Weight Peso
TEN00842	8M0057772	Cinc / Zinc / Zinco	0,858kg

Ánodo motor.
Anode engine.
Anodo motore.

TECNOSEAL save your dreams

Ref.	R.O.		Peso Weight Peso
TEN00843AL	87915QA65	Aluminio / Aluminium / Alluminio	0,890kg

Ánodo motor.
Anode engine.
Anodo motore.

TECNOSEAL save your dreams

KIT ANODOS PARA FUERABORDAS
KIT ANODES FOR OUTBOARDS
KIT ANODI PER FUORIBORDO

Ref.	
CMVERADO6KITA	Aluminio / Aluminium / Alluminio
CMVERADO6KITM	Magnesio / Magnesium / Magnesio

MOTORES / ENGINES / MOTORI
Verado 6 cyl.

Ref.	
CMVERADO4KITA	Aluminio / Aluminium / Alluminio
CMVERADO4KITM	Magnesio / Magnesium / Magnesio

MOTORES / ENGINES / MOTORI
Verado 4 cyl. / Optimax.

MUELLE DE ARRANQUE
REWIND SPRING
MOLLA AVVIAMENTO

Ref.	R.O.
REC24-13421	24-29340A1-T1

Modelo HP HP Model Modello HP	series serial serie
Merc 4	2498136 - 4107219
Merc 4.5	4107220 +
Merc 6	1408611 - 2387383
Merc 7.5	2529895 +
Merc 9.8	Todos / All / Tutti
Mark (10) 10	Todos / All / Tutti
Merc 10	1290910 - 1455239
Mark (15) 15	Todos / All / Tutti
Merc 15	1288910 - 1349697
Merc 20	3537531 - 6443972
Merc 20	1292910 - 3537530
Mark (28) 22	Todos / All / Tutti
Merc 25	1467499 - 1499331
Merc 30	1271885 - 1356947
Merc 35	1217222 - 1271884
Merc 35	1356948 - 1448139
Merc 35 (*)	1571114 - 1960826
Mark (55) 40	831021 +.
Merc 40	1279685 - 1476509
Mark (58) 45	1139538 +
Merc 45	1476510 - 1531568
Merc 50	1421113 - 2116317
Mark (75) 60	Todos / All / Tutti
Merc 60	Todos / All / Tutti
Merc 65	1542745 - 1765043
Mark (78) 70	Todos / All / Tutti
Merc 70	Todos / All / Tutti

(*) Excepto 4 cyl. / Except 4 cyl. / Eccetto 4 cyl.

MOTORES DE ARRANQUE
STARTERS
MOTORINI AVVIAMENTO

Ref.	R.O.	Tiempos Strokes Tempi	Dientes Tooth Denti
PH130-0020	50-60594A, 50-60594A1, 50-60594T01	2	10

MOTORES / ENGINES / MOTORI

2.0 & 2.4L V6
2.5L Racing Series

Ref.	R.O.	Tiempos Strokes Tempi	Dientes Tooth Denti
PH130-0021	50-90983T1, 5090983A1, 50893889T, 8M0033984	2	10

MOTORES / ENGINES / MOTORI

6 - 25 HP (1977-06)

Ref.	R.O.	Tiempos Strokes Tempi	Dientes Tooth Denti
PH130-0061	50-803835T02	4	10

MOTORES / ENGINES / MOTORI

8, 9.9HP (209cc)

Ref.	R.O.	Tiempos Strokes Tempi	Dientes Tooth Denti
PH130-0014	50-825991A2	4	10

MOTORES / ENGINES / MOTORI

8, 9.9HP
(Bodensee, Inter.) 232 cc

Ref.	R.O.	Tiempos Strokes Tempi	Dientes Tooth Denti
PH130-0034	50-852570T, 50-859168, 50-859168T, 50-857065	4	9

MOTORES / ENGINES / MOTORI

8, 9.9, 13.5, 15 HP

Ref.	R.O.	Tiempos Strokes Tempi	Dientes Tooth Denti
PH130-0006	50-853805T03	4	9

MOTORES / ENGINES / MOTORI

10 Carb (2 cyl)
15 Carb (2 cyl) / JCI
20 Carb (2 cyl)
25 EFI (3 cyl)
25 Jet EFI (3 Cyl)
30 EFI (3 cyl)

Ref.	R.O.	Tiempos Strokes Tempi	Dientes Tooth Denti
PH130-0049	50-97693M, 50-96359M, 50-814980M	2	11

MOTORES / ENGINES / MOTORI

MARINER 20-40HP (1977-92)

Ref.	R.O.	Tiempos Strokes Tempi	Dientes Tooth Denti
PH130-0029	50-830308T, 50-859169T, 50-888151T, 50-893886T	4	9

MOTORES / ENGINES / MOTORI

25 HP (1998-06)

Ref.	R.O.	Tiempos Strokes Tempi	Dientes Tooth Denti
PH130-0028	50-854636T, 50-859170T, 50-884045T, 50-888160T, 50-893897T, 854636T 859170T, 893887T	4	9

MOTORES / ENGINES / MOTORI

30-40 HP (1999+)

Ref.	R.O.	Tiempos Strokes Tempi	Dientes Tooth Denti
PH130-0024	50-822462, 50-822462T1, 50-893890T, 822462T1, 893890T	2	10

MOTORES / ENGINES / MOTORI

30-60 HP (1994-10)

Ref.	R.O.	Tiempos Strokes Tempi	Dientes Tooth Denti
PH130-0072	50-41583, 50-41583T	2	10

MOTORES / ENGINES / MOTORI

35, 40 HP (1980-89)

Ref.	R.O.	Tiempos Strokes Tempi	Dientes Tooth Denti
PH130-0040	50-55601A, 50-55601A2, 50-30829, 50-32403, 50-37345, 50-38890, 50-38890A1	2	9

MOTORES / ENGINES / MOTORI

35, 50 HP (1980-89)

Ref.	R.O.	Tiempos Strokes Tempi	Dientes Tooth Denti
PH130-0033	50-859377T, 50-884044T, 50-888161T 50-893888T	4	9

MOTORES / ENGINES / MOTORI

40, 50, 60 HP (2001+) 4 Cyl

Ref.	R.O.	Tiempos Strokes Tempi	Dientes Tooth Denti
PH130-0062	50-814980M	2	11

MOTORES / ENGINES / MOTORI

40HP (Twin Carb) (1986-92)

NEW

Ref.	R.O.	Tiempos Strokes Tempi	Dientes Tooth Denti
PH130-0011	50-73521, 50-73521T 50-44369A1, 50-44369	2	10

MOTORES / ENGINES / MOTORI

40-60 HP (1976-06)

Ref.	R.O.	Tiempos Strokes Tempi	Dientes Tooth Denti
ARC5362	50-834749, 50-859171T, 50-898265001	4	9

MOTORES / ENGINES / MOTORI

NEW

40 HP
40 ITALY
45 BONDESEE
50
50 BigFoot

Ref.	R.O.	Tiempos Strokes Tempi	Dientes Tooth Denti
PH130-0041	50-65436, 50-44369A1, 50-57485, 50-60315, 50-66015, 50-66015-2, 50-88119, 50-893891T	2	10

MOTORES / ENGINES / MOTORI

40-100 HP (1979-10)

Ref.	R.O.	Tiempos Strokes Tempi	Dientes Tooth Denti
PH130-0015	50-44369A1, 50-73521	2	10

MOTORES / ENGINES / MOTORI

40-45-50-55-60 HP (1984-06)

Ref.	R.O.	Tiempos Strokes Tempi	Dientes Tooth Denti
PH130-0022	50-820193, 50-820193-1, 50-820193-T1	2	13

MOTORES / ENGINES / MOTORI

40-50 HP (1992-99)

Ref.	R.O.	Tiempos Strokes Tempi	Dientes Tooth Denti
PH130-0025	50-819271, 50-820193A1	2	13

MOTORES / ENGINES / MOTORI

40-50HP (1991-94)

Ref.	R.O.	Tiempos Strokes Tempi	Dientes Tooth Denti
PH130-0007	97072M, 81490M, 50-92669M	2	9

MOTORES / ENGINES / MOTORI

50-60HP (2 Cyl) (1977-87)

NEW

Ref.	R.O.	Tiempos Strokes Tempi	Dientes Tooth Denti
PH130-0010	50-673341, 50-87788, 50-55304A-1, 50-48643, 50-45822, 50-37274, 50-32411, 50-31976, 50-30842, 50-29105	2	10

MOTORES / ENGINES / MOTORI

65-125HP (2 Cyl) (1977-87)

Ref.	R.O.	Tiempos Strokes Tempi	Dientes Tooth Denti
PH130-0019	50-66015, 50-66015T1	2	8

MOTORES / ENGINES / MOTORI

65-125HP (1976-11)
JET DRIVE & Outboard
4 cyl. en línea / inline / in rete.

Ref.	R.O.	Tiempos Strokes Tempi	Dientes Tooth Denti
PH130-0042	50-60975, 50-72467, 50-57465A1, 50-58330	2	10

MOTORES / ENGINES / MOTORI

65-175HP, V115, V140

Ref.	R.O.	Tiempos Strokes Tempi	Dientes Tooth Denti
PH130-0047	480955, 490955, 50-819085, 50-819085-1, 50-819085-T1, 50-583869, 50-616955-1	2	9

MOTORES / ENGINES / MOTORI

70-150HP (1983-99)

Ref.	R.O.	Tiempos Strokes Tempi	Dientes Tooth Denti
PH130-0057	50-881368T, 50-881368T1, 50-881368T2	4	13

MOTORES / ENGINES / MOTORI

75/80/90/100/115HP (EFI)
(2001-06)

Ref.	R.O.	Tiempos Strokes Tempi	Dientes Tooth Denti
PH130-0055	50-804312T1	4	13

MOTORES / ENGINES / MOTORI

75, 90HP (2000-05)

Ref.	R.O.	Tiempos Strokes Tempi	Dientes Tooth Denti
REC86976	50-856996T, 50-86976	2	9

MOTORES / ENGINES / MOTORI

115-250 V6 (2000-03)
200-225 V6 (1978-88)
Con volante de 135 dientes.
With 135 tooth flywheel.
Per volano da 135 denti.

Ref.	R.O.	Tiempos Strokes Tempi	Dientes Tooth Denti
PH130-0066	50-892339T, 50-853329T, 50-853329T01, 50-893892T	2 / 4	14

MOTORES / ENGINES / MOTORI

75, 90, V135, V150, V175, V200, 2.5L DFI, 0T178500 +,
200HP, 250HP, 3.0L, 0T467442 +,
4 - 6 cyl. en línea / inline / 4 - 6 cil. in linea.
Verados.
Funcionan con solenoides Bendix.
Models with solenoid operated Bendix.
Funzionano con solenoidi Bendix.

Ref.	R.O.	Tiempos Strokes Tempi	Dientes Tooth Denti
PH130-0009	50-819968, 50-819968-1, 50-819968-2, 50-819968-3, 50-819968-4, 50-819968T4, 50-853869, 50-853869-T	2	9

MOTORES / ENGINES / MOTORI

90-135HP (1993-00) JET DRIVE & Outboard

Ref.	R.O.	Tiempos Strokes Tempi	Dientes Tooth Denti
PH130-0046	50-79472, 50-44415, 50-79472 1, 50-77141, 50-884238T	2	8

MOTORES / ENGINES / MOTORI

100-250HP (1976-05)

Ref.	R.O.	Tiempos Strokes Tempi	Dientes Tooth Denti
PH130-0030	50-833153, 50-833153-1, 50-833153-2, 50-833153-5	2	9
	50-833153-3	4	9

MOTORES / ENGINES / MOTORI

V6 DFI, 135 - 150 DFI (2.5L), 200 - 225 DFI (1997-99)

Ref.	R.O.	Tiempos Strokes Tempi	Dientes Tooth Denti
PH130-0031	50-832997 1, 50-832997 2	2	8

MOTORES / ENGINES / MOTORI

MOTORES SPORT JET V6, 2.5L (1997-05)

Ref.	R.O.	Tiempos Strokes Tempi	Dientes Tooth Denti
PH130-0023	50-818445-2, 50-818445-3, 50-818445-5	2	8

MOTORES / ENGINES / MOTORI
225-250HP (1994-01)

Ref.	R.O.	Tiempos Strokes Tempi	Dientes Tooth Denti
PH130-0074	50-888333T, 50-888333T1	4	13

MOTORES / ENGINES / MOTORI
225 EFI (2003-06)

SOLENOIDES Y RELÉS
SOLENOID AND RELAYS
SOLENOIDI E RELÉ

Ref.	R.O.
PH375-0031	65057A1

(2T / 2 strokes / 2 Tempi)
Arranque solenoide
Starter solenoid
Avviamento solenoide

Ref.	R.O.
REC89-825096T01	89-825096T, 89-825096T01

MOTORES / ENGINES / MOTORI
(2& 4T / strokes / Tempi)

Ref.	R.O.
REC89-96054T	89-96054

MOTORES / ENGINES / MOTORI
15 - 200 HP
(2T / 2 strokes / 2 Tempi)

Ref.	R.O.
PHSEL-239	89-96158

MOTORES / ENGINES / MOTORI
35 - 300 HP
(2T / 2 strokes / 2 Tempi)

Ref.	R.O.
PH375-0011	25661-1

MOTORES / ENGINES / MOTORI
40 - 150 HP (1970-1985)
(2T / 2 strokes / 2 Tempi)
Arranque solenoide
Starter solenoid
Avviamento solenoide

Ref.	R.O.
PH375-0036	89-825842A1, 89-850188A1, 89-818999A1, A2

MOTORES / ENGINES / MOTORI
65 - 3.0L
(2T / 2 strokes / 2 Tempi)
(4T / 4 strokes / 4 Tempi)

Ref.	R.O.
PH375-0037	89-817109A1, 89-817109A2, 89-817109A3

MOTORES / ENGINES / MOTORI
65 - 250 HP
(2&4 T / 2&4 strokes / 2&4 Tempi)

Ref.	R.O.
REC54293A10	54293A10

MOTORES / ENGINES / MOTORI
75 HP (4 Cyl)
V-150 - V-200 HP (2T / 2 strokes / 2 Tempi)

Ref.	R.O.
PH375-0034	89-818997A1, 89-850187T1

MOTORES / ENGINES / MOTORI
30 - 225 HP (2T / 2 strokes / 2 Tempi)
25, 30, 40 HP (4T / 4 strokes / 4 Tempi)

Ref.	R.O.
PH375-0028	89-68258A4

MOTORES / ENGINES / MOTORI
100 - 250 HP (1976-1995)
(2T / 2 strokes / 2 Tempi)
Arranque
Starter
Avviamento

Ref.	R.O.
REC89-818864T	89-818864T

MOTORES / ENGINES / MOTORI
V-150 - V-200 HP
XR-4
(2T / 2 strokes / 2 Tempi)

Ref.	R.O.
REC87-18211	87-18211

12 Volt., 30 Amp.
35 - V-200 (2T / 2 strokes / 2 Tempi)

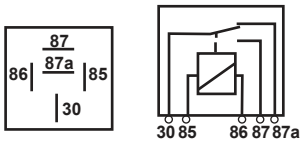

Ref.	R.O.
REC882751A1	882751A1, 828151, 828151A1, 882751A2

MOTORES / ENGINES / MOTORI
(2& 4T / strokes / Tempi)

Ref.	R.O.
REC821509	821509

MOTORES / ENGINES / MOTORI
(2& 4T / strokes / Tempi)

Ref.	R.O.
REC882751A04	882751A04

MOTORES / ENGINES / MOTORI
Verado
(4T / 4 strokes / 4 Tempi)

GUÍA RELÉS
RELAY GUIDE
GUIDA RELE

HP	SERIE SERIAL SERIE	RELÉ ARRANQUE STARTER RELAY AVVIAMENTO RELÉ	RELÉ POWER TRIM POWER TRIM RELAY RELE POWER TRIM
9.9 (323cc)	OG760300 - OT979999	REC89-825096T01	
15 (323cc)	OG760300 - 1B727495	REC89-825096T01	
25 (4T/4 stroke / 4 tempi)	OG590000 +	PH375-0034	REC882751A1
30 (Carb)	OG760300 +		REC882751A1
30 (EFI)	OT409000 - 1B226999	REC89-825096T01	REC882751A1
40 (3 Cyl, Carb)	OG760300 +		REC882751A1
40 (3 Cyl, EFI)	OT40900 +	REC89-825096T01	REC882751A1
40 (4 Cyl, Carb)	OT228405 - OT598999	REC89-825096T01	REC882751A1
40 (4 Cyl, EFI)	OT409000 +	REC89-825096T01	REC882751A1
45 (Bondesee)	OG231123 - OG472132	REC89-825096T01	REC821509
45 (Bondesee)	OG472133 - OT178499	REC89-825096T01	REC882751A1
50 (4 Stroke)	OG231123 - OT178499	REC89-825096T01	REC821509
50 (4Cyl, Carb. 996cc)	OT178500 - OT598999	REC89-825096T01	REC882751A1
50 (4Cyl, EFI 996cc)	OT409000 +	REC89-825096T01	REC882751A1
60 (4Cyl, Carb. 996cc)	OT178500 - OT800999	REC89-825096T01	REC882751A1
60 (4Cyl, EFI 996cc)	OT409000 +	REC89-825096T01	REC882751A1
75 (Carb, 1596cc)	OG960500 - 1B226999	REC89-825096T01	
75 (EFI 1596cc)	1B366823 +	PH375-0036	
90 (Carb 1596cc)	OG960500 - 1B226999	REC89-825096T01	
90 (EFI 1731cc)	1B366823 +	REC89-825096T01	
115 (EFI w/ 2 relay Trim)	OT178500 - OT800999		REC882751A1
115 (EFI 1731cc)	OT809000 - 1B366822		REC882751A1
115 (EFI 1731cc)	1B366823 +	REC89-825096T01	
Verado 4 & 6yl. (Todos / Alls / Tutti)	Todos / Alls / Tutti	REC882751A04	REC882751A04

TRIM & POWERTRIM

VÁLVULA DE ALIVIO
MANUAL RELEASE VALVE
VALVOLA DI SCARICO MANUALE

Ref.	R.O.
REC893929A01	893929A01, 813442A2, 813442A1, 811618A1, 811618, 812843A1, 99660A1

LATIGUILLOS TRIM
TRIM HOSES
TUBO TRIM

Ref.	R.O.
REC32-88005	32-88005
REC32-88006	32-88006

MOTORES / ENGINES / MOTORI
35 HP (2 cyl)
50, 60, 70 HP (3 cyl)
45, 50 HP (4 cyl)

TRIM COMPLETO
COMPLETE TRIM ASSEMBLY
MOTORINO TRIM COMPLETO

Ref.	R.O.
REC827675A1	827675A1

MOTORES / ENGINES / MOTORI

2 cables / 2 wires / 2 cavi
25 - 50 HP

Ref.	R.O.
PH200-T033	824051, 830250A6

MOTORES / ENGINES / MOTORI

3 cables / 3 wires / 3 cavi
65 & 80 JET, 75 & 90 (3 cyl)
100,115 & 125 (4 cyl)

Ref.	R.O.
PH200-T010	828708, 8782654A2, 828708T, 878265A4

MOTORES / ENGINES / MOTORI

Último modelo V6 / Late model V6 / Ultimo modello V6
135, 150XR6, 175, 200, 225, 250, (EFI / DFI)
300X (3.0L EFI)
MAGNUM III, 105-140 JET

Ref.	R.O.
REC826729A10	99186, 99186T, 99186-1, 826729A4, 826729A4/07, 826729A/08

MOTORES / ENGINES / MOTORI

Con sistema TRIM, Design I
With TRIM system, Design I
Con il sistema di TRIM, Design I
40 - 220HP O/B (1985-92)

Ref.	R.O.
PH200-T003	818903A1, 819762A4-A7, 819479A1, 809885A2, 819480A1, 81977A8-A9, 822870A1, 830250A3-T3, 832021A1-T4-A2-T2, 855654A1-T2, 19217A1-A5

MOTORES / ENGINES / MOTORI

2 cables / wires / cavi

30 JET & 4T / 4 strokes / 4 Tempi, 35,
40 2,3 y 4 cyl., 40 & 45 4T / 4 strokes / 4 Tempi, & BIGFOOT,
50 3 cyl., 4T / 4 strokes / 4 Tempi, & BIGFOOT,
55 3 cyl., 60 3 cyl. & BIGFOOT,
65 JET, 75 3 cyl. & 4T / 4 strokes / 4 Tempi,
80 JET,90 3 cyl. & 4T / 4 strokes / 4 Tempi,
100,115 & 125 4 cyl.

Ref.	R.O.
PH200-T008	823653A5/A9, 92459A4

MOTORES / ENGINES / MOTORI

225-250-275HP
V-3.4L

Ref.	R.O.
PH200-T015	17649A1/A02

MOTORES / ENGINES / MOTORI

V150 / V175 / V200 / V225 / V3.4L

Ref.	R.O.
REC878265A6	811628, 878265A6

MOTORES / ENGINES / MOTORI

Con sistema TRIM, Design II
With TRIM system, Design II
Con il sistema di TRIM, Design II
40 - 225HP (1985+)

ALTERNADOR
ALTERNATOR
ALTERNATORE

Ref.	R.O.
PH300-0048	892940T/T01

MOTORES / ENGINES / MOTORI

Verado (Todos / all / tutti) 135 HP+
(4 & 6 cyl)
12 Volt. 70 Amp

Ref.	R.O.
PH300-0030	881248T, 875285T1, 889955

MOTORES / ENGINES / MOTORI

2.5 L
12 Volt. 50 Amp

No reemplaza Nipponeso
4 Polea serpentín
Not replace Nipponeso
4 Groove Pulley
Non sostituisce Nipponeso
4 Puleggia a serpentina

Ref.	R.O.
PH300-0031	881247A1, 875286A1, 889956

MOTORES / ENGINES / MOTORI

3.0 L
12 Volt. 50 Amp

No reemplaza Nipponeso
4 Polea serpentín
Not replace Nipponeso
4 Groove Pulley
Non sostituisce Nipponeso
4 Puleggia a serpentina

Ref.	R.O.
PH300-0019	821663A1, 821663

MOTORES / ENGINES / MOTORI

3.0 L
200 / 225 Carb & EFi
12 Volt. 50 Amp

Ref.	R.O.
MES3164M	828506, 875286TA1, 881247A1 889956

MOTORES / ENGINES / MOTORI

3.0 L
200 / 225 DFi
12 Volt. 50 Amp
4 Polea serpentín / Groove Pulley / Puleggia a serpentina

Ref.	R.O.
PH300-0047	50-897755T, 8M0063970

NEW

MOTORES / ENGINES / MOTORI

75 / 80 / 90 / 100 / 115 HP EFi
(4T / Strokes / Tempi)
12 Volt. 50 Amp
4 Polea serpentín / Groove Pulley / Puleggia a serpentina

REGULADORES Y RECTIFICADORES
REGULATOR AND RECTIFIERS
REGOLATORI E RADDRIZZATORI

Ref.	R.O.
PH350-0003	332-2910, 62351, 816770, 78614

MOTORES / ENGINES / MOTORI

7.5 - 200HP

Ref.	R.O.
PAF15-07060001	853811008

NEW

MOTORES / ENGINES / MOTORI

8, 9.9HP (209cc) 4T / 4 stroke / 4 tempi

Ref.	R.O.
REC664-81970-62	810937M, 810937T, 8M0091976

NEW

MOTORES / ENGINES / MOTORI

9.9C (682-) Series / serial / serie
15C (684-) Series / serial / serie
55 (663-) Series / serial / serie

Ref.	R.O.
REC893640T01	883072T2, 854515T2, 893640T01, T1

MOTORES / ENGINES / MOTORI

2, 3, 4, 6 cyl.
(Para 6 cyl. requiere 2 unidades
For 6 cyl. requiered 2 units
Per 6 cil. richiede 2 unità.)

25HP- 2 cyl. (1999-05)
30-40 HP - 3 cyl. (2002-05)
40, 50, 60 HP - 4 cyl. (2002-07)
135, 140, 150, 175, 200, 240 HP - 6 cyl. (2000-05)
30/40/50/60 HP (EFI 4T / 4 stroke / 4 tempi)

Ref.	R.O.
REC881346T	881346T

NEW

MOTORES / ENGINES / MOTORI

75, 80, 90, 100, 115 HP
(EFI 4T / 4 stroke / 4 tempi)

Ref.	R.O.
REC67F-81960-12	804278T11, 804278T, 804278T1

NEW

MOTORES / ENGINES / MOTORI

Design I
75 HP (4T / 4 stroke / 4 tempi) (OG960500 - 1B226999)
90 HP (4T / 4 stroke / 4 tempi) (OG960500 - 1B226999)

Ref.	R.O.
REC883072T	81579-1-2-3-4-5, 815279T-2-4-5, 815279A1-2-3, 817411, 830179-2, 830179A1-2-3, 830179T, 854515, 854515T1, 883072T, 854515T1, 883072T

MOTORES / ENGINES / MOTORI

105HP, 225 HP (1989-91)
105 - 225HP (1992-05)

STARTOR
STARTOR
STARTORI

Ref.	R.O.
REC398-5454A17	398-5454A2, A5, A6, A7, A8, A9, A17, A18, A55

MOTORES / ENGINES / MOTORI

6 Cyl. (1978-88) 9 Amp

Ref.	R.O.
REC398-5454A35	398-5454A11-A15-A16-A30-A31-A32-A34-A35-A36-A61-A64-A66

MOTORES / ENGINES / MOTORI

16 Amp. 6 cyl.
(1980-88)

Ref.	R.O.
REC339-6120A1	339-5212A1, 339-5313A1, 339-5589A1, 339-5590A1, 339-6119A1, 339-6120A1

Sólo 2 bobinas
2 coils only
Solo 2 bobine

2 cyl.

Ref.	R.O.
CDI174-5454K1	398-5454A4/A21/A22/A24/A25/A26/A41/A42/A56/A62/A63, 398-5704A2/A4/A5/A7, 398-5919A2/A3/A6/A7/A8/A10, 398-18535A15, 398-852075A20

MOTORES / ENGINES / MOTORI

9 Amp. 3, 4 cyl.

Ref.	R.O.
REC86617A20	86617A2-A3-A5-A9-A11-A13-A17-A20

MOTORES / ENGINES / MOTORI

2 Cyl. Kit.
6 - 25 HP

Ref.	R.O.
REC398-852386T8	398-852386T8, 398-852386A4

MOTORES / ENGINES / MOTORI

NEW

25, 30, 40 HP (4T / Strokes / Tempi)
16 Amp
Arranque manual
Manual Start
Avviamento manual
(2 & 3 cyl)

Ref.	R.O.
REC398-852387T9	398-852387T9, 398-852387A4

MOTORES / ENGINES / MOTORI

NEW

25, 30, 40 HP (4T / Strokes / Tempi)
16 Amp
Arranque eléctrico
Electric Start
Avviamento elettrico
(2 & 3 cyl)

Ref.	R.O.
PH400-0002	398-832075A3-A4-A5-A6-A9-A12, 398-9873A22-A28

MOTORES / ENGINES / MOTORI

16 Amp. 2, 3, 4 cyl.

30 HP - 2 cyl. (1996-99)
3, 40, 50, 55, 65, 75, 90 HP - 3 cyl. (1997-07)
80, 115, 125 HP - 4 cyl. (1996-06)
100, 120 HP - 4 cyl. (1995-00)

Ref.	R.O.
REC398-832074A4	398-9710A11-12-14-15-22-23-25-28-30-31-33-34-36-38-39-43-45-46-47-48-49, 398-9873A9-17-19-24-25-28-29-32-33-35-38-39, 398-818535A17-18, F747095

MOTORES / ENGINES / MOTORI

16 Amp. 2, 3, 4 cyl.

40, 50, 55, 60, 65, 70, 75, 80, 90, 95 HP - 3 cyl. (1987-97)
30 Jet, 40, 80, 100, 115, 120, 125 HP - 4 cyl. (1989-97)
Se debe usar con regulador REC883072T.
Must be used with regulator REC883072T.
Bisogna utilizzarlo con regolatore REC883072T.

Ref.	R.O.
REC398-8778A29	398-8778A10-16-17-18-21-22-23-24-25-26-27-28-29, 398-818535A3-5-8-9-10-13-14-15, F749095

MOTORES / ENGINES / MOTORI

9 Amp. 2, 3, 4 cyl.
Se puede usar tanto con regulador como con rectificador.
It can be used with either a voltage regulator or a rectifier.
Si più utilizzae sia con il regolatore che con il retificatore.

40 HP - 4 cyl. (1989-91)
70-80 HP (1987-89)
90 HP (1987-92)
90 HP- 3 cyl. (1993)
100 HP (1988-96)
115 HP (1989-93)
125 HP - 4 cyl. (1994-96)

Ref.	R.O.
REC398-5704A7	398-5704A2-A4-A5-A7,

NEW

MOTORES / ENGINES / MOTORI

9 Amp
50, 60 HP - 3 cyl. (1984-90)
65 HP- 3 cyl. (1976)
70 HP - 3 cyl. (1977-85)

Ref.	R.O.
REC398-9610A18	398-9610A18

MOTORES / ENGINES / MOTORI
Kit conversión de arranque.
Kit starter conversion.
Kit conversione Starter

40 Amp.
135-200 HP
V-models

Ref.	R.O.
REC398-9610A19	398-9610A3 / A5 / A6 / A9 / A 14 / A19 / A22 / A24 / A 33

MOTORES / ENGINES / MOTORI

135 HP +
40 Amp, 6 cyl

TIGGERS

Ref.	R.O.
REC98450A10	98450A1-A3-A5-A10

MOTORES / ENGINES / MOTORI
6 - 25 HP - 2 Cyl.

Ref.	R.O.
REC96455A8	68162A3, 68162A6, 96455A1, 96455A8

MOTORES / ENGINES / MOTORI
3 Cyl.
50, 60 HP (1984-90)
65 HP (1976-79)
70 HP (1977-87)

Ref.	R.O.
REC99021A14	99021A14, 99021A11

MOTORES / ENGINES / MOTORI
30 - 40 HP - 2 Cyl. (1994-99)
Motores con módulos TPM.
Engines w/TPM Modules.
Motori con moduli TPM.

Ref.	R.O.
REC853960T	853960T, 855747A1

MOTORES / ENGINES / MOTORI
30 - 40 HP - 2 Cyl. (1998-05)

Ref.	R.O.
REC854512T	854512T, 834520T, 855745A12

MOTORES / ENGINES / MOTORI
30, 40, 50, 65, 75, 90 HP
(1996-05)

Ref.	R.O.
REC96452A4	73372A1, 73410A1, 76681A1, 770002, 96452A1-A4-A5

MOTORES / ENGINES / MOTORI
4 Cyl.
40, 45 HP (1989-97)
45 HP (1981-89)
50 HP (1976-85)
80 HP (1978-79)
85 HP (1976-77)

Ref.	R.O.
REC99021A16	99021A3, A5, A8, A13, A15, A16

MOTORES / ENGINES / MOTORI
70, 75, 80, 90 HP - 3 Cyl.

Ref.	R.O.
REC96455A9	681621, A5, A8, 96455A4, A6, A9

MOTORES / ENGINES / MOTORI
90 - V225 HP - 6 Cyl.
Jet, MagnumII, MagnumIII (105, 150 HP)
XR4, XR6 (150, 175 HP)
Promax, Super Magnum (150, 200, 225 HP)

Ref.	R.O.
REC854513T	834821T, 855748A2, 854513T

MOTORES / ENGINES / MOTORI

100 -115 -125 HP - 80JET- 4 Cyl.

Ref.	R.O.
REC99021A6	99021A2, A6, K2

MOTORES / ENGINES / MOTORI

Mariner 100, 115, 125 HP - 4 Cyl.
JET 80 HP

Ref.	R.O.
CDI134-6456-18	96455A18, 96455T18

MOTORES / ENGINES / MOTORI

135 - 240 HP - 6 Cyl. 6 PIN CONNECTOR
135, 150, 175, 200 - XR6 HP 2.5L, 240 HP
2T / 2 Strokes / 2 Tempi
(2000 - 2007)

CAJAS NEGRAS
POWER PACKS
CENTRALINE

Ref.	R.O.
REC803034T	823034T

MOTORES / ENGINES / MOTORI

2.5, 3.3, 3 HP - 1 Cyl.

Ref.	R.O.
REC16061T04	16061T04

MOTORES / ENGINES / MOTORI

4, 5 HP - 1 Cyl.
2 T / 2 Strokes / 2 Tempi

Ref.	R.O.
REC339-6222A10	339-5287, 339-6222A1-4-6-8-10, 339-778A1-3-5-6-9-12, 332-5524A1-2

MOTORES / ENGINES / MOTORI

4 - 20 HP - 2 Cyl.

Ref.	R.O.
REC855713A3	855713A3, 855713A4

MOTORES / ENGINES / MOTORI

6 - 25 HP - 2 Cyl.

Ref.	R.O.
REC696-85540-12	41305M

NEW

MOTORES / ENGINES / MOTORI

Mariner 6C/D, 8C, W-48/W-55

Ref.	R.O.
REC6G9-85540-29	825667, 825667T

NEW

MOTORES / ENGINES / MOTORI

8 Bodensee (4T / 4 Strokes / 4 Tempi) Inter.
USA (OH017100+)

9.9 (232 cc) (4T / 4 Strokes / 4 Tempi)
USA (OH000058-OH016909)

Ref.	R.O.
REC803704	803704T

NEW

MOTORES / ENGINES / MOTORI

Mercury 9.9, 15, 18 HP (Inter.) 2 Cyl.

Ref.	R.O.
REC695-85540-11	430775/M

NEW

MOTORES / ENGINES / MOTORI

Mariner 9.9C, 15C, 15K, W15, 20C, 25C

Ref.	R.O.
REC3G2-06060-2	803706A3, 8M0047313, 8M0071855

NEW

MOTORES / ENGINES / MOTORI

9.9, 15, 18 HP - 2 Cyl. (Inter.)

Ref.	R.O.
REC18495A30	18495A9, A14, A15, A20, A21, A25, A30

MOTORES / ENGINES / MOTORI

15 - 25 HP - 2 Cyl.

Ref.	R.O.
REC899883230	339-7452 A2, A3, 899883230

MOTORES / ENGINES / MOTORI

18 - 20 HP (1979-87) - 2 Cyl.

Ref.	R.O.
REC339-7452A19	339-7452A1, A2, A3, A7, A8, A9, A10, A11, A14, A15, A21

MOTORES / ENGINES / MOTORI

20 - 35 HP - 2 Cyl.

Ref.	R.O.
REC332-4911A8	332-4911A2-3-5-8, 338-4733A2

MOTORES / ENGINES / MOTORI

20 - 40 HP - 2 Cyl.

Ref.	R.O.
REC300-03107	332-5772A5, 332-5772A1, 332-5772A2, 332-5772A3, 332-5772A7

MOTORES / ENGINES / MOTORI

30 - 115 HP - 4 Cyl.

Ref.	R.O.
REC6F5-85540-22	11737T

NEW

MOTORES / ENGINES / MOTORI

Mariner K40 HP

Ref.	R.O.
REC18495A13	18495A4-5-6-8-13

MOTORES / ENGINES / MOTORI

40 - 50 HP - 2 Cyl.

No para / not for / Non per
A9-14-16-20-21-30

Ref.	R.O.
REC19052A8	19052A1, 2, 3, 4, 5, 6, 8

MOTORES / ENGINES / MOTORI

45 - 60 HP - 3 Cyl.

Ref.	R.O.
REC663-85540-15	3030T/M

NEW

MOTORES / ENGINES / MOTORI

MARINER 48 / 55 / W-48,
60 HP - 2 Cyl.

Ref.	R.O.
REC300-01852	332-5524,A1, 332-7778, A1, A3, A5, A6, A9, A12, A14

MOTORES / ENGINES / MOTORI

50 - 250 HP

Ref.	R.O.
REC18495A26	18495-A10-12-15-18-19-26

MOTORES / ENGINES / MOTORI

65 - 95 HP - 3 cyl.

Ref.	R.O.
REC332-2986A27	332-2986A22, 332-2986A21, 332-2986A25, 332-2986A27

MOTORES / ENGINES / MOTORI

65 - 150 HP - 4/6 Cyl.

GUÍA / APPLICATION / GUIDE

HP	Modelo Model Modello	Cyl.	Año Year Anno	Serie Serial Seriale	Caja Negra Switch Centraline	Startor	Trigger	Regulador Regulator Regolatore
2		1		OT884302 +	REC803034T			
2.5, 3.3		1		OP017000 +	REC803034T			
4	Gnat	2	1976-80	9075839-5595531	REC339-6222A10	REC339-6120A1		
	40	2	1980	5589202-5595531	REC339-6222A10	REC339-6120A1		
6		2	1986-96	A197112-OG289100	REC339-7452A19	REC86617A20	REC98450A10	
7.5	75	2	1974-86	3801458-A197111	REC339-6222A10	REC339-6120A1		PH350-0003
8		2	1986-96	A197112-OG289100	REC339-7452A19	REC86617A20	REC98450A10	
9.8	110	2	1974-78	3795659-5206549	REC339-6222A10	REC339-6120A1		PH350-0003
		2	1979-85	5206550-6620196	REC339-6222A10	REC339-6120A1		
9.9		2	1986-96	A197112-OG289100	REC339-7452A19	REC86617A20	REC98450A10	
10		2	1986-96	A197112-OG289100	REC339-7452A19	REC86617A20	REC98450A10	
15	S15	2	1988-93	B238464-OG044365	REC339-7452A19	REC86617A20	REC98450A10	
	XD/S15	2	1996-97	OG438000-OG760299	REC339-7452A19	REC86617A20	REC98450A10	PH350-0003
	Sea Pro	2	1996-97	OG438000-OG760299	REC339-7452A19	REC86617A20	REC98450A10	PH350-0003
	SEAPRO XD	2	1994-97	OG044027-437999	REC18495A30	REC86617A20	REC98450A10	PH350-0003
	SUPER	2	1994-97	OG044027-437999	REC18495A30	REC86617A20	REC98450A10	PH350-0003
18		2	1980-93	5837437-OG044026	REC899883230	REC86617A20	REC98450A10	
	XD	2	1979-87	5837437-B114230	REC899883230	REC86617A20	REC98450A10	
20	200	2	1973-77	3537531-4709592	REC332-4911A8			
		2	1977-81	4709593-5837436		REC339-6120A1		
	XD	2	1979-87	5837437-B114230	REC899883230	REC86617A20	REC98450A10	
		2	1980-87	5705532 - B238463	REC339-7452A19	REC86617A20	REC98450A10	
		2	1980-87	5705532 - B238463	REC899883230	REC86617A20	REC98450A10	
		2	1988-94	B238464-OG044026	REC339-7452A19	REC86617A20	REC98450A10	
	JET	2	1994-97	OG044027-437999	REC18495A30	REC86617A20	REC98450A10	PH350-0003
		2	1994-97	OG044027-437999	REC18495A30	REC86617A20	REC98450A10	PH350-0003
	Sea Pro	2	1996-97	OG438000-OG760299	REC339-7452A19	REC86617A20	REC98450A10	PH350-0003
		2	1997-98	OG438000-OG760299		REC86617A20	REC98450A10	PH350-0003
25	XD	2	1979-87	5837437-B114230	REC899883230	REC86617A20	REC98450A10	
		2	1979-87	5705532 - OB238463	REC899883230	REC86617A20	REC98450A10	
		2	1979-87	5705532 - OB238463	REC339-7452A19	REC86617A20	REC98450A10	
		2	1988-93	OB238464-OG044365	REC339-7452A19	REC86617A20	REC98450A10	
	Jet 20	2	1994-97	OG044027-OG437999		REC86617A20	REC98450A10	PH350-0003
	MARATHON		1994-97	OG044027-437999	REC18495A30	REC86617A20	REC98450A10	PH350-0003
	SEA PRO	2	1994-97	OG044027-437999	REC18495A30	REC86617A20	REC98450A10	PH350-0003
	Sea Pro	2	1996-97	OG438000-OG760299	REC339-7452A19	REC86617A20	REC98450A10	PH350-0003
	4T / 4 Stroke / 4 Tempi (Man. Start) 16 Amp	2		-0G960499		REC398-852386T8		REC883072T
	4T / 4 Stroke / 4 Tempi (Elect. Start) 16 Amp	2		-0G960499		REC398-852387T9		REC883072T
30	Man.-Elec.		1998-99	OG590000 -OG760299			REC853960T	
	Man.-Elec.		1999-06	OG760300 -OT979999			REC853960T	
	JET	4	1989-97	C159200-OG589999	REC300-03107	REC398-5704A7	REC96452A4	PH350-0003
	4T / 4 Stroke / 4 Tempi (Man. Start) 16 Amp	3		-0G960499		REC398-852386T8		REC883072T
	4T / 4 Stroke / 4 Tempi (Elect. Start) 16 Amp	3		-0G960499		REC398-852387T9		REC883072T
35		2	1984-89	6445653-B393190	REC899883230	REC86617A20	REC98450A10	PH350-0003
		2	1984-89	6445653-B393190	REC339-7452A19	REC86617A20	REC98450A10	
40	402 Elect. Start.	2	1975-77	4117710-4860102	REC332-4911A8			PH350-0003
	Man. Start	2	1975-81	4117710-5823917	REC332-4911A8			
	Elect. Start	2	1978-81	4860103 - 5823917	REC332-4911A8			PH350-0003
	Elect. Start	2	1981-84	5823918-6052942	REC899883230	REC86617A20		PH350-0003
	Elect. Start	2	1981-84	6052943-6999999	REC899883230	REC86617A20		PH350-0003
	Man. Start	2	1981-84	5823918-6999999	REC899883230	REC86617A20		

HP	Modelo Model Modello	Cyl.	Año Year Anno	Serie Serial Seriale	Caja Negra Switch Centraline	Startor	Trigger	Regulador Regulator Regolatore
40	Elect. Start	4	1989-91	C159200 - D055047	REC300-03107	REC398-5704A7	REC96452A4	PH350-0003
	Man. Start	4	1989-91	C159200 - D055047	REC300-03107	REC398-5704A7	REC96452A4	
	Elect. Start	4	1991-96	D055048-OG291031	REC300-03107	REC398-832074A4	REC96452A4	REC883072T
	Man. -Elec.		1998-05	OG760300 -OT979999			REC853960T	
		3	1997-99	OG531301-OG760300		PH400-0002		
	JET	4	1989-97	C159200 - OG589999	REC300-03107	REC398-5704A7	REC96452A4	PH350-0003
	4T / 4 Stroke / 4 Tempi (Man. Start) 16 Amp	3		-0G960499		REC398-852386T8		REC883072T
	4T / 4 Stroke / 4 Tempi (Elect. Start) 16 Amp	3		-0G960499		REC398-852387T9		REC883072T
45	Elect. Start	4	1981-89	5531630-B393190	REC300-03107	REC398-5704A7	REC96452A4	PH350-0003
	Man. Start	4	1981-89	5531630-B393190	REC300-03107		REC96452A4	
	JET	3	1991-99	D000750-OG589999	REC19052A8	REC398-832074A4		REC883072T
50	Elect. Start	4	1976-79	4357640-5531629	REC300-03107	REC398-5704A7	REC96452A4	PH350-0003
	Man. Start	4	1976-79	4357640-5531629	REC300-03107		REC96452A4	
	Elect. Start	4	1980-85	5531630-6586624	REC300-03107	REC398-5704A7	REC96452A4	PH350-0003
	Man. Start	4	1980-85	5531630-6586624	REC300-03107		REC96452A4	
		3	1984-90	6428681-D000749	REC300-01852	REC398-5704A7	REC96455A8	PH350-0003
		3	1991-99	D000750-OG589999	REC19052A8	REC398-832074A4		REC883072T
	Man. Start	3	1997-99	OG531301-OG760300		PH400-0002		
	Elect. Start	3	1997-00	OG531301-OG760300		PH400-0002		
55		3	1991-99	D000750-OG589999	REC19052A8	REC398-832074A4		REC883072T
	Elect. Start	3	1996-98	G290585-OG589999	REC19052A8	REC398-832074A4		
	Man. Start	3	1996-98	G290585-OG589999	REC19052A8			
60		3	1984-90	6428681-D000749	REC300-01852	REC398-5704A7	REC96455A8	PH350-0003
		3	1991-97	D000750-OG589999	REC19052A8	REC398-832074A4		PH350-0003
65	650	4	1967	2119749-2309310	REC332-2986A27			PH350-0003
		4	1969-71	2503991-3293183	REC332-2986A27			PH350-0003
		3	1976-79	4382057-4571651	REC300-01852	REC398-5704A7	REC96455A8	PH350-0003
	Jet Elect Start	3	1994-96	D283222-OG437999	REC18495A26	REC398-832074A4		REC883072T
	Jet Man Start	3	1994-96	D283222-OG437999	REC18495A26			
70		3	1977-87	4571652-A730815	REC300-01852	REC398-5704A7	REC96455A8	PH350-0003
	9 Amp	3	1987-93	A996142 - D283221	REC300-01852	REC398-8778A29		PH350-0003
	16 Amp	3	1987-93	A996142 - D283221	REC300-01852	REC398-832074A4		REC883072T
75		4	1984-88	6432901-B279480	REC300-03107	CDI174-5454K1	REC96455A8	PH350-0003
	9 Amp	3	1987-93	A996142 - D283221	REC300-01852	REC398-8778A29	REC99021A16	PH350-0003
	16 Amp	3	1987-93	A996142 - D283221	REC300-01852	REC398-832074A4	REC99021A16	REC883072T
	Elect. Start	3	1994-96	D283222-OG437999	REC18495A26	REC398-832074A4	REC99021A16	REC883072T
	Man. Start	3	1994-96	D283222-OG437999	REC18495A26		REC99021A16	
		3	1996-00	OG438000-OG760299		PH400-0002		
80	800	4	1969	2559001-2991033	REC332-2986A27			PH350-0003
	800	4	1970	3052381-3059820	REC332-2986A27			PH350-0003
	800	4	1971-72	3307347-3493912	REC332-2986A27			PH350-0003
	9 Amp	3	1987-93	A996142-D283221	REC300-01852	REC398-8778A29	REC99021A16	PH350-0003
	16 Amp	3	1987-93	A996142-D283221	REC300-01852	REC398-832074A4	REC99021A16	PH350-0003
	JET	4	1994-97	D283222-OG437999	REC300-03107	REC398-832074A4	REC99021A6	PH350-0003
	JET	4	1996-06	0G438000-IB000001			REC854513T	
	850	4	1973-75	3493913-4366801	REC332-2986A27			PH350-0003
	850	4	1976-77	4366802-4831998	REC300-03107	CDI174-5454K1	REC96452A4	PH350-0003
90	Inline		1978-79	845301-5299505	REC332-2986A27			PH350-0003
	Inline	6	1979-86	5299506 - B110053	REC300-01852	REC398-5454A17	REC96455A9	PH350-0003
	Elect. Start	3	1987-92	A996142 - C221999	REC300-01852	REC398-8778A29	REC96455A8	PH350-0003
	Elect. Start	3	1993-96	C222000-OG437999	REC18495A26	REC398-832074A4	REC99021A16	REC883072T
	Man. Start	3	1994-96	D283222-OG437999	REC18495A26		REC99021A16	
		3	1996-99	OG438000-OG760299		PH400-0002		
	Sport Jet	3	1995	E021000-E095087	REC300-01852	REC398-8778A29		REC883072T
	Sport Jet	3	1995-96	E080400-E145579	REC18495A26	REC398-8778A29		REC883072T
95	950	6	1966-67	2101743-2318585	REC332-2986A27			PH350-0003
	XRSprtJet	3	1995-97	E141089 - E315900	REC18495A26	REC398-832074A4		REC883072T
100	1000 Inline	6	1967-69	2641855-3253111	REC332-2986A27			
		4	1988-93	B209468 - D283221	REC300-03107	REC398-8778A29	REC99021A6	REC883072T
	9 Amp	4	1994-96	D283222-OG437999	REC300-03107	REC398-8778A29	REC99021A6	REC883072T
	16 Amp	4	1994-96	D283222-OG437999	REC300-03107	REC398-832074A4	REC99021A6	REC883072T
105	JET	6	1992-95	D082000-OG201874	REC300-01852	PH400-0002	REC96455A9	REC883072T
	JET	6	1996-00	OG303046-OG840500	REC300-01852	PH400-0002	REC96455A9	REC883072T
110	1100 Inline	6	1967	2113898-2314955	REC332-2986A27			PH350-0003

HP	Modelo Model Modello	Cyl.	Año Year Anno	Serie Serial Seriale	Caja Negra Switch Centraline	Startor	Trigger	Regulador Regulator Regolatore
115	150SSInlin	6	1970-79	2836019-5314655	REC332-2986A27			PH350-0003
	Inline	6	1979-80	5314656-5600966	REC300-01852	REC398-5454A17	REC96455A9	PH350-0003
	Inline	6	1980-82	5600967-6051525	REC300-01852	REC398-5454A17	REC96455A9	PH350-0003
	Inline	6	1982-89	6051526-C10000	REC300-01852	REC398-5454A17	REC96455A9	PH350-0003
	9 Amp	4	1989-93	C100000-D252460	REC300-03107	REC398-8778A29	REC99021A6	REC883072T
	16 Amp	4	1989-97	C100000-OG437999	REC300-03107	REC398-832074A4	REC99021A6	REC883072T
120	XRSprtJet	4	1995-97	E141089 - E315900		PH400-0002		REC883072T
125	1250 Inline	6	1968-69	2314956-3253111	REC332-2986A27			PH350-0003
	9 Amp	4	1994-96	D283222-OG437999	REC300-03107	REC398-8778A29	REC99021A6	REC883072T
	16 Amp	4	1994-96	D283222-OG437999	REC300-03107	REC398-832074A4	REC99021A6	REC883072T
135	1350 Inline	6	1970-71	2839369-3293233	REC332-2986A27			PH350-0003
	V-135	6	1985-88	A904646-C100860	REC300-01852	REC398-5454A17	REC96455A9	PH350-0003
	V-135	6	1989-90	C100861-C239552	REC300-01852	REC398-9610A19	REC96455A9	
	V-135 16 Amp	6	1990-91	C239553-D081999	REC300-01852	REC398-832074A4	REC96455A9	PH350-0003
	V- 135 40 Amp	6	1990-91	C239553-D081999	REC300-01852	REC398-9610A19	REC96455A9	
	V-135 40 Amp	6	1992-95	D082000-OG201874	REC300-01852	REC398-9610A19	REC96455A9	REC883072T
	V-135 40 Amp	6	1996-00	G303046-G840500	REC300-01852	REC398-9610A19	REC96455A9	REC883072T
	V-135	6	1900-01	OG960500-OT178499			CDI134-6456-18	
140	1400 Inline	6	1972	3293234-3502805	REC332-2986A27			PH350-0003
	Inline	6	1978-79	4855153-5314655	REC332-2986A27			PH350-0003
	Inline	6	1979	5327663-5625107	REC300-01852	REC398-5454A17	REC96455A9	PH350-0003
	140	6	1980	5625108-5669999	REC300-01852	REC398-5454A17	REC96455A9	PH350-0003
	Jet	6	1992-95	D082000-OG201874	REC300-01852	REC398-9610A19	REC96455A9	REC883072T
	Jet	6	1996-99	OG303046-OG760300	REC300-01852	REC398-9610A19	REC96455A9	REC883072T
	Jet	6	2000-01	OG960500-OT178499			CDI134-6456-18	
150	1500 Inline	6	1973-77	3502806-4868997	REC332-2986A27			
	XR2 Mag	6	1978-86	4868998-OA904645	REC300-01852		REC96455A9	PH350-0003
	V-135	6	1985-88	A904646-C100860	REC300-01852	REC398-5454A17	REC96455A9	PH350-0003
	V-150	6	1989-90	C100861-C239552	REC300-01852	REC398-9610A19	REC96455A9	
	V-150 16 Amp	6	1990-91	C239553-D081999	REC300-01852	REC398-5454A17	REC96455A9	PH350-0003
	V-150 40 Amp	6	1990-91	C239553-D081999	REC300-01852	REC398-9610A19	REC96455A9	
	V-150 40 Amp	6	1992-95	D082000-OG201874	REC300-01852	REC398-9610A19	REC96455A9	REC883072T
	V-150 40 Amp	6	1996-00	OG303046-OG840500	REC300-01852	REC398-9610A19	REC96455A9	REC883072T
	V-150 2T	6	2000-05	OG960500-OT178499			CDI134-6456-18	
175	Black Max	6	1976-79	4301235-5393736	REC300-01852	REC398-5454A17	REC96455A9	PH350-0003
	Black Max	6	1979-84	5593737-6618750	REC300-01852	REC398-5454A17	REC96455A9	PH350-0003
	V-175 9 Amp	6	1985-88	6618751-C100860	REC300-01852	REC398-5454A17	REC96455A9	PH350-0003
	V-175 15 Amp	6	1985-88	6618751-C100860	REC300-01852	REC398-5454A35	REC96455A9	PH350-0003
	V-175 40 Amp	6	1989-90	C100861-C239552	REC300-01852	REC398-9610A19	REC96455A9	
	V-175 16 Amp	6	1990-91	OC239553-OD081999	REC300-01852	REC398-5454A35	REC96455A9	PH350-0003
	V-175 40 Amp	6	1990-91	OC239553-OD081999	REC300-01852	REC398-9610A19	REC96455A9	
	XRi 40Amp	6	1992-95	OD082000-OG201874	REC300-01852	REC398-9610A19	REC96455A9	REC883072T
	XRi 40Amp	6	1996-00	OG303046-OG840500	REC300-01852	REC398-9610A19	REC96455A9	REC883072T
	XR2 SptJet	6	1997-99	OE151580 -OE345000	REC18495A26		REC96455A9	REC883072T
	V-175 EFI 2T	6	2000-01	OG960500-OT178499			CDI134-6456-18	
200	Black Max	6	1978-79	4839034 - 5363917	REC300-01852	REC398-5454A17	REC96455A9	PH350-0003
	Black Max	6	1979-81	5363918-6073191	REC300-01852	REC398-5454A17	REC96455A9	PH350-0003
	V-200 15 Amp	6	1982-90	6073192-C239553	REC300-01852	REC398-5454A17	REC96455A9	PH350-0003
	V-200 16 Amp	6	1985-90	6625221-C239553	REC300-01852	REC398-5454A17	REC96455A9	PH350-0003
	V-200 16 Amp	6	1989-95	C100861-OG201874	REC300-01852	REC398-5454A17	REC96455A9	PH350-0003
	V-200 Xri 40Amp	6	1989-91	C100861-OG303045	REC300-01852	PH400-0002	REC96455A9	
	V-200 16 Amp	6	1992-99	D082000-OG201874	REC300-01852	REC398-5454A17	REC96455A9	REC883072T
	V-200 40 Amp	6	1989-91	OG201875-OG30345	REC300-01852	REC398-9610A19	REC96455A9	
	V-200 2T	6	2000-05	OG960500-OT178499			CDI134-6456-18	
	EFI	6	1992-99	D082000-OG840500	REC300-01852	REC398-9610A19	REC96455A9	REC883072T
	EFI	6	2000-05	OG960500-OT178499			CDI134-6456-18	
	V-200	6	1987-88	B117316-C100860	REC300-01852	REC398-5454A17	REC96455A9	PH350-0003
225	V-225	6	1981-93	5628028-D280812	REC300-01852	REC398-5454A17	REC96455A9	PH350-0003
250	2.5L 16 Ap	6	1989-94	C101891-D280900	REC300-01852	REC398-5454A17		PH350-0003
	2.5L 40 Ap	6	1989-94	C101891-D280900	REC300-01852	REC398-9610A19		
275	16 Amp	6	1989-94	C101891-D280900	REC300-01852	REC398-5454A17		PH350-0003
	40 Amp	6	1989-94	C101891-D280900	REC300-01852	REC398-9610A19		
300	3.4L	6	1980-87	5611648-A996135	REC300-01852	REC398-5454A17		PH350-0003

BOBINAS
COILS
BOBINE

BOBINA DE IGNICIÓN
COIL IGNITION
BOBINE INIEZIONE

Ref.	R.O.	Tiempos / Strokes / Tempi
REC823033	823033	2

MOTORES / ENGINES / MOTORI
2.5, 3, 3.3 HP

Ref.	R.O.	Tiempos / Strokes / Tempi
REC815113T02	16064A1	2

MOTORES / ENGINES / MOTORI
4, 5 HP (1 cyl)

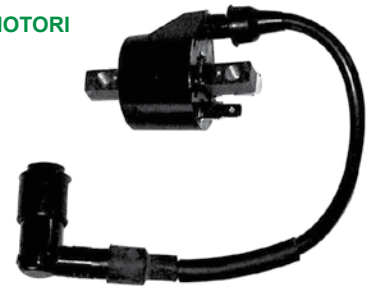

Ref.	R.O.	Tiempos / Strokes / Tempi
REC6E7-85570-19	95188T	

MOTORES / ENGINES / MOTORI
MARINER 8K, K40 HP (2 cyl)

Ref.	R.O.	Tiempos / Strokes / Tempi
PAF15-07000600	855685T	4

MOTORES / ENGINES / MOTORI
8 HP (BONDENSE)
9.9 HP (323 cc)
13.5 HP (inter.)
15 HP (4 T / 4 Strokes / 4 Tempi)

Ref.	R.O.	Tiempos / Strokes / Tempi
REC803844T01	339-803844T01	4

MOTORES / ENGINES / MOTORI
8, 9.9 HP (209 cc)

Ref.	R.O.	Tiempos / Strokes / Tempi
REC8M0071855	339-803706A1	2

MOTORES / ENGINES / MOTORI
9.9, 15, 18 HP (inter.) - 2 cyl

Ref.	R.O.	Tiempos / Strokes / Tempi
REC300-08309	339-7370A13	

MOTORES / ENGINES / MOTORI
10 - 220 hp
XR-4 / XR-6 / XR10

Ref.	R.O.	Tiempos / Strokes / Tempi
REC8M0047311	160643	2

MOTORES / ENGINES / MOTORI
25, 30 HP (inter) - 2 Cyl.

Ref.	R.O.	Tiempos / Strokes / Tempi
PAF25-05120000	339-859738T1	4

MOTORES / ENGINES / MOTORI
25 HP (2 cyl)
40, 50, 60 HP (4 cyl)

Ref.	R.O.	Tiempos / Strokes / Tempi
REC339-825101T	339-825101T	4

MOTORES / ENGINES / MOTORI

40 HP Italy
45 HP Bodensee
50 HP Bigfoot (4 T / 4 Strokes / 4 Tempi)

Ref.	R.O.	Tiempos / Strokes / Tempi
REC697-85570-00	97077M	

MOTORES / ENGINES / MOTORI

MARINER 55, 60, W48 (2 cyl)

Ref.	R.O.	Tiempos / Strokes / Tempi
REC398-173	398-173	2

MOTORES / ENGINES / MOTORI

60 - 250 HP

Ref.	R.O.	Tiempos / Strokes / Tempi
REC339-8M0077471	339-8M0077471, 339-879984A01, 339-879984T01, 339-879984T00	2

MOTORES / ENGINES / MOTORI

Modelo Model Modello	Series USA USA serial Serie USA	Series BEL BEL serial Serie BEL
75 DFI (3 Cyl) (1.5L)	0T980000 +	
80 Jet (3 Cyl) (1.5L)	1B586067 +	
90 DFI (3 Cyl) (1.5L)	0T801000 +	
115 DFI (3 Cyl) (1.5L)	0T801000 +	
115 Pro Xs (3 Cyl) (1.5L)	1B751825	
125 DFI (3 Cyl) (1.5L)	1B736885	
200 (DFI) 3.0L	1B504989 - 1B912785	
200 Pro Xs (DFI) 3.0L	1B504989 - 1B912785	
200 (DFI) 3.0L	1B504989 +	
200 (DFI) 3.0L	1B528615 +	
30 EFI (3 Cyl) (4 T / 4 Stroke / 4 Tempi)	0T409000 -1B226999 / 1C109093+	0P153500 - 0P400999
40 EFI (3 Cyl) (4 T / 4 Stroke / 4 Tempi)	0T409000 +	0P153500 - 0PP515896
40 EFI (4 Cyl) (4 T / 4 Stroke / 4 Tempi)	0T409000 +	0P153500 +
50 EFI (4 Cyl) (4 T / 4 Stroke / 4 Tempi)	0T409000 +	0P153500 +
60 EFI (4 Cyl) (4 T / 4 Stroke / 4 Tempi)	0T409000 +	0P153500 +

Ref.	R.O.	Tiempos / Strokes / Tempi
REC339-880615T01	339-880615T01	4

MOTORES / ENGINES / MOTORI

75/80/90/100/115 HP EFI
135 - 400 Verado

Ref.	R.O.	Tiempos / Strokes / Tempi
REC339-8M0077473	339-8M0077473, 339-883778A01, 339-883778A02	2

MOTORES / ENGINES / MOTORI

110 Jet (2.5 L), 150 ProXS (2.5L) (1B690542+)
200 (3.0L DFI) DTS, 200 (DFI) 3.0L, 200 ProXS (DFI) 3.0L (1B504989+)
225 (3.0L DFI) DTS, 225 (DFI) 3.0L (1B504989+)
250 (DFI) 3.0L (1B528615+)

Ref.	R.O.	Tiempos / Strokes / Tempi
REC300-08310	339-85699A1	2

MOTORES / ENGINES / MOTORI

200 DFI, 225DFI, V135DFI (2.5L),
V150DFI (2.5L)
3.0 DFI

Ref.	R.O.	Tiempos / Strokes / Tempi
REC1463-9382	32193A2, 806529A1	2

MOTORES / ENGINES / MOTORI

Usar con resistencia externa.
Use external resistor.
Utilizzare con resistenza esterna.
800 (6 cyl)

BOBINA DE CARGA
COIL CHARGER
BOBINE DI CARICA

Ref.	R.O.	Tiempos / Strokes / Tempi
REC803702	803702T	2

MOTORES / ENGINES / MOTORI

9.9, 15, 18, 25, 30 HP (intern) (2 cyl)

Ref.	R.O.	Tiempos / Strokes / Tempi
PAF8-05090000W	855944T01	4

MOTORES / ENGINES / MOTORI
8, 9.9HP (209cc)

BOBINA DE EXCITACIÓN
COIL EXCITER
BOBINE LUCE

Ref.	R.O.	Tiempos / Strokes / Tempi
REC16058	16058T	2

MOTORES / ENGINES / MOTORI
4, 5 HP - 1cyl.

Ref.	R.O.	Tiempos / Strokes / Tempi
PAF8-05000300	803844T01	4

MOTORES / ENGINES / MOTORI
8, 9.9HP (209cc)

MÓDULOS Y LIMITADORES
MODULES & LIMITATORS
MODULI E LIMITATORI

MODULO ALARMA ACEITE
OIL WARNING MODULE
MODULO DI ALLARME OLIO

Ref.	R.O.
REC14857A16	14857A10, A16

MOTORES / ENGINES / MOTORI
30 Jet, 40, 45 Jet, 50, 55, 60 HP
(3 & 4 cyl)

LIMITADOR R.P.M.
R.P.M. LIMITER
LIMITATORE R.P.M.

Ref.	R.O.
REC821889A50	821889A9, A22, A29, A34, A38, A40, A42, A46, A50, A51

MOTORES / ENGINES / MOTORI
5.200 r.p.m.

MÓDULO CMD
CMD MODULE ASSY
MODULO CMD

Ref.	R.O.	Tiempos / Strokes / Tempi
REC827509A10	827509A10,T7	2

MOTORES / ENGINES / MOTORI
30 - 250 HP (1997+)
(3 & 4 cyl)

SENSORES
SENDERS
SENSORE

SENSOR POSICIÓN CIGÜEÑAL
POSITION CRANCKSHAFT SENDER
SENSORE POSICIONE ALBERO

Ref.	R.O.	Tiempos / Strokes / Tempi
REC16066004	16066004	4

MOTORES / ENGINES / MOTORI
8 HP (209 cc)
9.9 HP (209 cc)

SENSOR DE PICADO
KNOCK SENDERS
SENSORE ANTIDETONAZIONE

Ref.	R.O.
REC8M6000623	

MOTORES / ENGINES / MOTORI
V-135 - V-175 DFI (2.5 L)
110 JET (2.5 L)
175 PRO XS (2.5 L)

SENSOR PRESIÓN ACEITE
OIL PRESURE SENSOR
SENSORE PRESIONE OLIO

Ref.	R.O.	Tiempos / Strokes / Tempi
PAF15-07010100	87-803538	4

MOTORES / ENGINES / MOTORI
4-25 HP

SENSOR TEMPERATURA
TEMPERATURE SENDER
SENSORE TEMPERATURA

Ref.	R.O.	Rosca / Thread / Passo
REC12415	12415	1/8"-27NPT

NEW

MOTORES / ENGINES / MOTORI
30 Jet
40 / 100 / 115 (4 cyl)
40 / 50 / 60 /70 / 75 / 80 / 90 (3 cyl)
300 (3.4L)
v-50 Work / XR-2
V-135 - V-200

SENSOR MAP
MAP SENDERS
SENSORE MAP

Ref.	R.O.
REC854445	854445

NEW

MOTORES / ENGINES / MOTORI
100 EFI, 115 EFI, 90 EFI (4 T / 4 Strokes / 4 Tempi)
90, 115 DFI (3 Cyl.) 1.5 L
200 DFI (3 Cyl.) 1.5 L
200 (3.0 L DFI) (EFI) (DTS)
225 (3.0 L DFI) (EFI) (DTS) Seapro
250 (3.0 L EFI) (DFI)
40, 30 EFI (3 Cyl.) (4 T / 4 Strokes / 4 Tempi)
40, 50, 60 EFI (4 Cyl.) (4 T / 4 Strokes / 4 Tempi)
75 DFI (3 Cyl.) (1.5 L)
75, 80 EFI (4 T / 4 Strokes / 4 Tempi)
V-115 - V-175 DFI (2.5 L)
V-150 - V-200 EFI (2.5 L)

LLAVES DE ARRANQUE
IGNITION STARTER SWITCHES
CHIAVE DI AVVIAMENTO

Ref.	R.O. OEM	Terminales Terminals Terminali	Posiciones Positions Posizione	Envase Pack Qnt
MP41070	87-17009A2, 87-17009A5	6	3	1 x blister
MP41000	87-88107A5	6	3	1 x blister

MP41070
Llave de arranque de 3 posiciones con retroceso, Off-Contacto-Arranque (Choke). Fabricada en poliéster anticorrosión. Terminales: 6 cables.
3 positions, Off-Run-Start. 6 Wires. Magneto
Chiave di avviamento a 3 posizioni con ritorno: Off-Contatto-Avviamento. In poliestere anticorrosione. Terminali: 6 cavi.

MP41000
Llave de arranque de 3 posiciones con retroceso, Off-Contacto-Arranque (Choke). Fabricada en poliéster anticorrosión. Terminales: 6 tornilllos.
3 positions, Off-Run-Start. 6 screws. Magneto.
Chiave di avviamento a 3 posizioni con ritorno: Off-Contatto-Avviamento. In poliestere anticorrosione. Terminali: 6 viti.

INTERRUPTORES
CUT OFF SWITCHES
INTERRUTORI

DESCONECTADOR DE SEGURIDAD
IGNITION KILL SWITCH
INTERRUTTORE DI SICUREZZA

Ref.	R.O. OEM	Envase Pack Qnt
REC200		1 x blister
REC688-82575-01	87-97682M	1 x blister
REC6E9-82575-02	87-97757M	1 x blister
REC6A0-82550-01	87-93102M	1 x blister

RECmar®

REC200

REC688-82575-01

REC6E9-82575-02

REC6A0-82550-01

Ref.	Características Features Caractteristiche	Envase Pack Qnt
REC40970	Conjunto completo / Complete kit / Kit completo	1 x blister
REC40990	Cuerda tirador recambio / Spare / Corda tirante ricambio	1 x blister
GS11290	Conjunto completo / Complete kit / Kit completo	1 x blister
GS11291	Cuerda tirador recambio / Spare / Corda tirante ricambio	1 x blister
GS11292	Kit completo / Complete kit / Kit completo	1 x blister

Interruptor de encendido para todo tipo de motores fueraborda o intraborda.
Emergency and stop switch for inboard or outboards.
Interruttore di accensione per tutti i tipi di motori entrobordo e fuoribordo.

RECmar®

REC40970- REC40990

GOLDENSHIP

GS11290 - GS11291

GOLDENSHIP
GS11292

Ref.	R.O. OEM	Envase Pack Qnt
REC87-823609A17	87-823609A17	1 x blister

MOTORES / ENGINES / MOTORI
6 - 25 HP

RECmar®

KIT LLAVES
KILL SWITCH KEYS
KIT CHIAVI

Ref.	Envase / Pack / Qnt
GS11294	1 x blister

GOLDENSHIP

Kit de 8 llaves de recambio para:
Kit of 8 spare keys for:
Kit da 8 chiavi di ricambio per:
J/E - OMC - Mercury - Yamaha - Honda -Suzuki - Tohatsu.

PLATINOS Y CONDENSADORES
POINTS & CONDENSERS
PUNTINE E CONDENSATORE

PLATINOS
POINTS
PUNTINE

Ref.	R.O.
REC398-174	398-174

MOTORES / ENGINES / MOTORI
60 / 100 / 110 / 150 / 200 / 250

Ref.	R.O.
REC398-2202	398-2202

MOTORES / ENGINES / MOTORI
39, 40 HP (1 cyl)
60 / 75 / 110 / 350

Ref.	R.O.
REC394-1100A3	394-1100A3

MOTORES / ENGINES / MOTORI
300 / 350

CONDENSADORES
CONDENSER
CONDENSATORI

Ref.	R.O.
REC394-1130A1	394-1130A1

MOTORES / ENGINES / MOTORI
500

Ref.	R.O.
REC398-693	398-693

MOTORES / ENGINES / MOTORI
60 / 100 / 110 / 150 / 200 / 250

KITS

Ref.	Platino Point Puntino	Condensador Condenser Condensatore
REC18-5007	398-174	398-693
REC18-5012	394-1100A3	394-1130A1

JUNTAS DISTRIBUIDOR
DISTRIBUTOR GASKET
GUARNIZIONE DISTRIBUTORE

Ref.	R.O.
REC27-25725	27-25725

MOTORES / ENGINES / MOTORI
40-65 HP

Ref.	R.O.
REC27-47190	27-47190

MOTORES / ENGINES / MOTORI
500
650 (4 cyl) (1970-75)

Ref.	R.O.
REC27-46351	27-46351

MOTORES / ENGINES / MOTORI
650 (4 cyl)
950 (6 cyl)

BUJÍAS
SPARK
CANDELE

4 TIEMPOS STROKES — MERCURY

Modelo Model Modello	Tiempos Strokes Tempi	HP	Años Years Anni	Ref. NGK	Ref. NGK IRIDIUM	Ref. CHAMPION
2.5 HP 85cc 1 cyl	4	2.5	2006-11	NGKDCPR6E	NGKCDPR6EIX	CHARA8HC
3.5 HP 85cc 1cyl	4	3.5	2006-11	NGKDCPR6E	NGKDCPR6EIX	CHARA8HC
4 HP 123cc 1 cyl	4	4	2000-11	NGKDCPR6E	NGKDCPR6EIX	CHARA8HC
5 HP 123 cc 1 cyl	4	5	2000-11	NGKDCPR6E	NGKDCPR6EIX	CHARA8HC
6 HP 123cc 1 cyl	4	6	2000-11	NGKDCPR6E	NGKDCPR6EIX	CHARA8HC
8 HP 208cc 2 cyl	4	8	2005-11	NGKDCPR6E	NGKDCPR6EIX	CHARA8HC
9.9	4	9.9	1999-02	NGKDPR6EA-9		CHARA8HC
9.9	4	9.9	1995-98	NGKCR6HS		
9.9 HP, Bigfoot, Prockicker 2008cc 2cyl	4	9.9	2001-11	NGKDCPR6E	NGKDCPR6EIX	CHARA8HC
15 Bigfoot	4	15	1998-06	NGKDPR6EA-9		CHARA8HC
15 HP, Prokicker, Bigfoot 351cc 2cyl	4	15	2007-11	NGKDCPR6E	NGKDCPR6EIX	CHARA8HC
20HP 351cc 2 cyl	4	20	2008-11	NGKDCPR6E	NGKDCPR6EIX	CHARA8HC
25	4	25	1998-05	NGKDPR6EA-9		CHARA8HC
25 EFI 526cc 3cyl	4	25	2006-11	NGKDCPR6E	NGKDCPR6EIX	CHARA8HC
30, 30 EFI 526cc, 3 cyl	4	30	1999-11	NGKDPR6EA-9		CHARA8HC
40, Big Foot 4cyl	4	40	2001-06	NGKDPR6EA-9		CHARA8HC
40 EFI, Bigfoot 995cc 4 cyl	4	40	2007-11	NGKDCPR6E	NGKDCPR6EIX	CHARA8HC
45 Bodensee 4 cyl	4	45	1995-02	NGKDPR6EA-9		CHARA8HC
50, Bigfoot 4cyl	4	50	1995-00	NGKDPR6EA-9		CHARA8HC
50 EFI, Bigfoot 995cc 4cyl	4	50	2006-11	NGKDCPR6E	NGKDCPR6EIX	CHARA8HC
60 EFI, Bigfoot 995cc 4 cyl	4	60	2001-11	NGKDPR6EA-9		CHARA8HC
75 EFI 1.7L 4cyl	4	75	2000-11		NGKLFR5A-11	
90 EFI 1.7L 4 cyl	4	90	2000-11		NGKLFR5A-11	
150 Verado 1.7L 4cyl Supercharged	4	150	2006-11		NGKLFR5A-11	
250 Verado, Pro Four Stroke 2.6L Supercharged	4	250	2004-11		NGKLFR5A-11	
275 Verado 6 cyl Supercharged	4	275	2004-10		NGKLFR5A-11	
300 Verado, Pro FourStroke 2.6L 6cyl Supecharged	4	300	2008-11		NGKLFR5A-11	

2 TIEMPOS STROKES — MERCURY

Modelo Model Modello	Tiempos Strokes Tempi	HP	Años Years Anni	Ref. NGK	Ref. NGK IRIDIUM	Ref. CHAMPION
Classic 1 cyl	2	2.5	1993-05	NGKBP6HS		CHAL87YCC
2.5 EFI High Performance Engine	2	2.5	1994-97	NGKBUZHW		
3.0	2	3.0	1990-92	NGKBPR6HS-10		
3.3	2	3.3	1993-06	NGKBPR6HS-10		
3.5	2	3.5	1983-85	NGKBP6HS		CHAL87YCC
3.6	2	3.6	1980-82	NGKBP7HS-10		CHAL82YC
39	2	3.9	1967-68	NGKBR5HS		CHAL90C
39	2	3.9	1964-66	NGKBR6S		CHARJ8C
Classic 1 cyl	2	4	1988-05	NGKBPR7HS-10		CHARL82YC
4.0	2	4	1986-87	NGKBUZHW-2		
4.0	2	4	1980-82	NGKBPR7HS	NGKBR7HIX	CHARL82YC
40 Gnat	2	4	1976-79	NGKBR6HS		CHARL86C
40	2	4	1970-74	NGKBUZHW-2		
40	2	4	1969	NGKBR5HS		CHAL90C
4.5	2	4.5	1985-75	NGKBUZHW-2		
Classic 1 cyl	2	5	1988-06	NGKBPR7HS-10		CHARL82YC
6.0	2	6	1986-03	NGKBPZ8HN-10		CHAQL78YC
60	2	6	1967-68	NGKBR6HS		CHARL86C
60	2	6	1963-66	NGKBR6S		CHARJ8C
75	2	7.5	1979-85	NGKB9HS-10		CHAL77JC4
75	2	7.5	1975-78	NGKBUZHW-2		
75	2	7.5	1970-73	NGKBUZHW-2		
75	2	7.5	1974	NGKBUZHW		
75	2	7.5	1969	NGKBR6HS		CHARL86C
8.0	2	8	2001-06	NGKBPZ8HN-10		CHAQL78YC
8.0 Bodensee	2	8	1995-06	NGKCR6HS		
8.0	2	8	1986-00	NGKBP8HN-10		
9.8	2	9.8	1979-85	NGKB9HS-10		CHAL77JC4
110	2	9.8	1970-73	NGKBUZHW-2		
110	2	9.8	1967-69	NGKBR7HS		CHARL82C
100, 110	2	9.8	1960-66	NGKBR6S		CHARJ8C
110	2	9.8	1974	NGKBUZHW		
110	2	9.8	1975-78	NGKBUZHW-2		
9.9	2	9.9	2001-06			
9.9	2	9.9	1995-00	NGKBP8HS-15		
9.9	2	9.9	1986-94	NGKBP8HN-10		
10 Sea Pro 2 cyl	2	10	2001-02			
10, XR10, Sea Pro 2cyl	2	10	1991-00	NGKBP8HS-15		
15 Sea Pro	2	15	2001-06			
15 Sea Pro	2	15	1989-00	NGKBP8HS-15		
150	2	15	1960-61	NGKBR6S		CHARJ8C
18, XD	2	18	1981-85	NGKBP8HN-10		
20, Jet, Sea Pro 2 cyl	2	20	2001-06	NGKBPZ8HN-10		CHAQL78YC
20, Jet 2cyl	2	20	1986-00	NGKBP8HN-10		
20, 200	2	20	1970-80	NGKBUZHW-2		
200	2	20	1967-69	NGKBR7HS		CHARL82C
200	2	20	1960-66	NGKBR6S		CHARJ8C
25	2	25	2001-06	NGKBPZ8HN-10		CHAQL78YC
25, XD, Sea Pro	2	25	1980-00	NGKBP8HN-10		
250	2	25	1962	NGKBR6S		CHARJ8C
30, Sea Pro, Jet 2cyl	2	30	2001-02	NGKBPZ8HN-10		CHAQL78YC
30, Sea Pro, Jet 2cyl	2	30	1995-00	NGKBP8HN-10		
30 3cyl	2	30	1995-97	NGKBUZHW-2		
300 4cyl	2	30	1960	NGKBR6S		CHARJ8C
35	2	35	1984-91	NGKBUZHW		
350	2	35	1967-69	NGKBR7HS		CHARL82C
350	2	35	1961-6			CHAJ6C
40, Sea Pro 2 cyl	2	40	2001-06	NGKBPZ8HN-10		CHAQL78YC
40 3 cyl	2	40	2001-02	NGKBPZ8HN-10		CHAQL78YC
40 3 cyl	2	40	1998-00	NGKBP8HN-10		
40, Sea Pro 2 cyl	2	40	1995-00	NGKBP8HN-10		
40 4cyl	2	40	1988-97	NGKBUZHW-2		
40, 400, 402 2 cyl	2	40	1970-83	NGKBUZHW		
400	2	40	1960-61	NGKBR6S		CHARJ8C
40HP, EFI 747cc 3cyl	2	40	2003-11	NGKDPR6EA-9		CHARA8HC
45 Jet 3 cyl	2	45	2001-02	NGKBPZ8HN-10		CHAQL78YC
45 Jet 3 cyl	2	45	1995-00	NGKBP8HN-10		

Modelo Model Modello	Tiempos Strokes Tempi	HP	Años Years Anni	Ref. NGK	Ref. NGK IRIDIUM	Ref. CHAMPION
45	2	45	1986-89	NGKBUZHW-2		
450	2	45	1962	NGKBR6S		CHARJ8C
50 3cyl	2	50	2001-06	NGKBPZ8HN-10		CHAQL78YC
50 3cyl	2	50	1991-00	NGKBP8HN-10		
50 3cyl	2	50	1986-90	NGKBUZHW		
50, 500	2	50	1978-85	NGKBUZHW-2		
500, 500SS	2	50	1967-77	NGKBUZHW		
500	2	50	1961-66			CHAJ6C
500M, 500S	2	50	1967	NGKBR7HS		CHARL82C
55, Sea Pro, 3cyl	2	55	2001-06	NGKBPZ8HN-10		CHAQL78YC
55, Sea Pro, 3cyl	2	55	1992-00	NGKBP8HN-10		
60, Sea Pro, 3cyl	2	60	2001-06	NGKBPZ8HN-10		CHAQL78YC
60, Sea Pro, Bigfoot, 3cyl	2	60	1991-00	NGKBP8HN-10		
60	2	60	1984-90	NGKBUZHW		
600 6 cyl	2	60	1960-61	NGKBR6S		CHARJ8C
65 Jet 3cyl	2	65	2001-02	NGKBUZHW-2		
65 Jet 3cyl	2	65	1995-00	NGKBUZHW-2		
650	2	65	1972-76	NGKBUZHW		
650S	2	65	1968-71	NGKBUZHW		
650SS	2	65	1967-71	NGKBUH		CHAL20V
650	2	65	1963-66			CHAJ6C
650S	2	65	1967-68	NGKBR7HS		CHARL82C
70	2	70	1987-89	NGKBUZHW-2		
70	2	70	1979-83	NGKBUZHW		
700	2	70	1977-78	NGKBUZHW		
700 6cyl	2	70	1960-61	NGKBR6S		CHARJ8C
Walleye L4N4 Engine	2	75	2007	NGKLFR4AE		
75 3cyl	2	75	2001-06	NGKBUZHW-2		
75, Sea Pro 3cyl	2	75	1987-00	NGKBUZHW-2		
75XD 4cyl	2	75	1984-86	NGKBUZHW-2		
75 Jet 3cyl	2	75	2001-02	NGKBUZHW-2		
80 Jet 4cyl	2	80	1995-00	NGKBP8HN-10		
80 3cyl	2	80	1987-89	NGKBUZHW-2		
80 4cyl	2	80	1979-83	NGKBUZHW-2		
800	2	80	1970-72	NGKBUZHW		
800 6cyl	2	80	1960-61			CHAJ6C
80 Jet 4cyl	2	80	2001	NGKBPZ8HN-10		CHAQL78YC
800	2	80	1978	NGKBUZHW-2		
800	2	80	1969	NGKBUZHW		
850	2	85	1973-77	NGKBUZHW		
850 6cyl	2	85	1962-64			CHAJ6C
Walleye L4N4 Engine	2	90	2007	NGKLFR4AE		
90 3cyl	2	90	1999-06	NGKBUZHW-2		
90	2	90	1987-98	NGKBUZHW-2		
90, 900 6cyl	2	90	1978-86	NGKBUZHW		
900	2	90	1965			CHAJ6C
950SS	2	95	1966-67	NGKBUZHW		
950	2	95	1966	NGKBR7HS		CHARL82C
100	2	100	1988-99	NGKBP8HN-10		
1000BP, 1000SS	2	100	1968-69	NGKBUZHW		
1000	2	100	1962-64			CHAJ6C
105 Jet	2	105	1995-98	NGKBU8H		CHAQL6VC
1100SS	2	110	1966-67	NGKBUZHW		
1100	2	110	1966	NGKBR7HS		CHARL82C
Walleye L4N4 Engine	2	115	2007	NGKLFR4AE		
115 4cyl	2	115	2001-06	NGKBPZ8HN-10		CHAQL78YC
115 4cyl	2	115	1989-00	NGKBP8HN-10		
115, 1150	2	115	1970-88	NGKBUZHW		
125 4cyl	2	125	2001-06	NGKBPZ8HN-10		CHAQL78YC
125 4cyl	2	125	1994-00	NGKBP8HN-10		

Modelo Model Modello	Tiempos Strokes Tempi	HP	Años Years Anni	Ref. NGK	Ref. NGK IRIDIUM	Ref. CHAMPION
1250 BP, SS	2	125	1968-69	NGKBUZHW		
135 6 cyl	2	135	2000-02	NGKBPZ8HS-10		CHAQL78YC
135	2	135	1986-99	NGKBU8H		CHAQL6VC
1350	2	135	1970-71	NGKBUZHW		
140 Jet	2	140	1995-99	NGKBU8H		CHAQL6VC
140	2	140	1979-80	NGKBUZHW		
1400	2	140	1972-78	NGKBUZHW		
1400	2	140	1970-73	NGKBUZHW		
150, EFI, XRI, XR-2, XR-4 6cyl	2	150	2000-06	NGKBPZ8HS-10		CHAQL78YC
150, 1500	2	150	1978-02	NGKBU8H		CHAQL6VC
1500	2	150	1973-77	NGKBUZHW		
175 Xri	2	175	1991-02	NGKBU8H		CHAQL6VC
175, EFI MFI 6 cyl	2	175	2000-01	NGKBPZ8HS-10		CHAQL78YC
175, EFI	2	175	1979-99	NGKBU8H		CHAQL6VC
1750	2	175	1976-78	NGKBUZHW		
200, EFI, MFI, 6 cyl	2	200	2000-06	NGKBPZ8HS-10		CHAQL78YC
200 Xri	2	200	1989-02	NGKBUZ8H		CHAQL6VC
200, EFI	2	200	1979-99	NGKBU8H		CHAQL6VC
200 EFI 6 cyl	2	200	2006	NGKBR8HS		CHAQL78C
Duece High EFI 2.0L	2	200	1997	NGKBUZ8H		CHAQL6VC
F1 EFI 2.0L	2	200	1997	NGKBUZHW		
200 SST, EFI, SS, XR2 2.0L	2	200	1997	NGKBUZHW		
2000	2	200	1978	NGKBUZHW		
V-220 Laser	2	220	1987-88	NGKBUZ8H		CHAQL6VC
225 EFI, Sea Pro, Xri, Work 6 cyl	2	225	1995-06	NGKBR8HS	NGKBR8HIX	CHAQL78C
225, Work 3.0l V-6	2	225	1994-97	NGKBPZ8HN-10		CHAQL78YC
225	2	225	1980-81	NGKBU8H		CHAQL6VC
2.5L	2	245	1995-96	NGKBU8H		CHAQL6VC
250 Xri EFI 6 cyl	2	250	1995-06	NGKBR8HS	NGKBR8HIX	CHAQL78C
250 3.4L	2	250	1989-90	NGKBU8H		CHAQL6VC
2.5L Offshore	2	260	1995-97	NGKBU8H		CHAQL6VC
2.5L SS Drag EFI	2	265	1997	NGKBU8H		CHAQL6VC
275	2	275	1989-94	NGKBU8H		CHAQL6VC
EFI Sport, SS, Offshore 2.5L	2	280	2002	NGKBZ7HS-10		
3.4L	2	300	1984-88	NGKBU8H		CHAQL6VC
300 4cyl	2	300	1981-83	NGKBU8H		CHAQL6VC
2.5L S3000 EFI	2	300	1997	NGKBU8H		CHAQL6VC
2.5L Carb High Performance	2		1991-93	NGKBUZHW		
21.9 cu in 25SS Racing	2			NGKBUZHW		
49.9 cu in 650X Racing	2			NGKBUZHW		
99.9 cu in Twister 11-x Racing	2			NGKBUZHW		
10X High Performance	2			NGKBP8HS-10		
150 Magnum Pro Max Super	2			NGKBUZHW		
2.0L F1 Carb/EFI High Performance	2			NGKBUZHW		
2.4L Bass High Performance	2			NGKBUZHW		
2.4L EFI High Performance	2			NGKBUZHW		
2.4L Mod VP High Performance	2			NGKBUZHW		
200 Magnum EFI Pro Max Super	2			NGKBUZHW		
225 Magnum EFI Pro Max Super	2			NGKBUZHW		
25SS High Performance	2			NGKBUZHW-2		
25XS High Performance	2			NGKBUZHW		
44XS High Performance	2			NGKBUZHW-2		
SST 140 High Performance	2			NGKBUZHW		
XR-2 Magnum High Performance	2			NGKBUZHW		

4 TIEMPOS STROKES — MARINER

Modelo Model Modello	Tiempos Strokes Tempi	HP	Años Years Anni	Ref. NGK	Ref. NGK IRIDIUM	Ref. CHAMPION
2.5 Carb	4	2.5		NGKDCPR6E	NGKDCPR6EIX	
3.5 Carb	4	3.5		NGKDCPR6E	NGKDCPR6EIX	
4.0	4	4	1999-02	NGKDCPR6E	NGKDCPR6EIX	
5.0	4	5	1999-02	NGKDCPR6E	NGKDCPR6EIX	CHARA8HC
6.0	4	6	2000-02	NGKDCPR6E	NGKDCPR6EIX	CHARA8HC
8.0 209cc	4	8		NGKDCPR6E	NGKDCPR6EIX	CHARA8HC
9.9	4	9.9	1999-02	NGKDPR6EA-9		
9.9 Big Foot, Sail Power	4	9.9	1995-02	NGKCR6HS		
9.9 209cc	4	9.9		NGKDCPR6E	NGKDCPR6EIX	
15	4	15	1998-02	NGKDPR6EA-9		
15 Carb 2 Cyl	4	15		NGKDCPR6E	NGKDCPR6EIX	CHARA8HC
20 Carb 2 Cyl	4	20		NGKDCPR6E	NGKDCPR6EIX	CHARA8HC
25	4	25	1998-02	NGKDPR6EA-9		
25 EFI 3Cyl	4	25		NGKDCPR6E	NGKDCPR6EIX	CHARA8HC
30 2 Cyl	4	30	1999-02	NGKDPR6EA-9		
40 3 Cyl	4	40	1998-01	NGKCPR6EA-9		
50 4 Cyl	4	50	1995-01	NGKDPR6EA-9		
75	4	75	2000		NGKLFR5A-11	
90	4	90	2000		NGKLFR5A-11	
225 Super Magnum EFI		225	1997-99	NGKBU8H		CHAQL6VC

2 TIEMPOS STROKES — MARINER

Modelo Model Modello	Tiempos Strokes Tempi	HP	Años Years Anni	Ref. NGK	Ref. NGK IRIDIUM	Ref. CHAMPION
2A 646	2	2		NGKBR6HS		CHARL86C
2B 6A1 (M011600+)	2	2		NGKBR6HS		CHARL86C
2B 6A1 (-M011600)	2	2		NGKBR6HS		CHARL86C
2.5	2	2.5	1990-02	NGKBPR6HS-10		
3.3	2	3.3	1993-02	NGKBPR6HS-10		
3.5 642 (-M23740)	2	3.5		NGKBR7HS		
3.5 642 (M23741+)	2	3.5		NGKBR6HS		
3.5 642 (ML41691+)	2	3.5		NGKBR6HS		
3.5 642 (-ML41690)	2	3.5		NGKBR7HS		
4.0	2	4	1990-02	NGKBPR7HS-10		CHARL82YC
4A 6E0	2	4		NGKBR7HS		CHARL82C
5.0	2	5	1990-02	NGKBPR7HS-10		CHARL82YC
5A 661	2	5		NGKBR7HS		CHARL82C
5C 6E3	2	5		NGKBR7HS		CHARL82C
6.0	2	6	1992-02	NGKBP8HN-10		CHARL82YC
6B 678	2	6		NGKBR5HS		CHAL90C
6C 6H8	2	6		NGKB7HS-10		CHAL82C
6D 6H6	2	6		NGKB7HS-10		CHAL82C
8.0	2	8	1993-02	NGKBP8HN-10		CHARA8HC
K8 680	2	8	1991-00	NGKBR6HS		CHARL86C
8.0 Bondensee	2	8	1995-99	NGKCR6HS		CHARL86C
8	2	8	1987-92	NGKBP8HS-10		
8A 647 / 655	2	8		NGKBR6HS		CHARL86C
8B 677	2	8		NGKBR7HS		CHARL82C
8C 6G1	2	8		NGKB7HS-10		CHAL82C
8 Marathon / W8 / 8 677	2	8		NGKBR7HS		CHARL82C
9.9	2	9.9	1995-00	NGKBP8HS-15		
9.9	2	9.9	1987-94	NGKBP8HS-10		
9.9C 682 CDI	2	9.9		NGKB7HS-10		
9.9C 682	2	9.9		NGKBR7HS		
10 Marathon	2	10	1991-02	NGKBP8HS-15		
10 Magnum	2	10	1991-98	NGKBP8HS-15		
15 Marathon	2	15	1997-02	NGKBP8HS-15		
15 2Cyl	2	15	1989-02	NGKBP8HS-15		
15 K15 6K4	2	15	1984-00	NGKB7HS-10		CHAL82C
15 Marathon	2	15	1992-96	NGKBP8HN-10		
15 Marathon 684 CDI	2	15		NGKB7HS-10		CHARL82C
15 Marathon 684	2	15		NGKBR7HS		
15A 651	2	15		NGKBR7HS		
15C 684 CDI	2	15		NGKB7HS-10		
15C 684	2	15		NGKBR7HS		
K15 669	2	15		NGKBR6HS		
K15 6M7	2	15		NGKB7HS-10		CHAL82C
W15 662	2	15		NGKBR7HS		
W15 684	2	15		NGKB7HS-10		CHARL82C
20	2	20	1985-02	NGK8H-N-10		
20 Jet	2	20	1995-01	NGKBP8HN-10		
20A 653	2	20		NGKBR6HS		CHARL86C
20C 6A9	2	20		NGKBR7HS		CHARL82C
25 Marathon	2	25	1993-02	NGKBP8HN-10		
25	2	25	1985-01	NGKBP8HN-10		
K25 6A4	2	25	1997-00	NGKBR7HS		CHARL82C
25 Marathon 648, 694, 695	2	25		NGKBR7HS		CHARL82C
25A, 25B, 25C	2	25		NGKBR7HS		
W25, WS25	2	25		NGKBR7HS		
25	2	25	1992	NGKBU8H		CHAQL6VC
28 664	2	28		NGKBR7HS		CHARL82C
30 Marathon	2	30	1995-02	NGKBP8HN-10		
30 Jet 3 Cyl	2	30	1998-01	NGKBP8HN-10		
30	2	30	1995-00	NGKBP8HN-10		
30 Jet 3 Cyl	2	30	1995-97	NGKBUZHW-2		
30A 689	2	30	1992-94	NGKBR7HS		
W30 689A	2	30	1992-93	NGKBR7HS		
W30 698B	2	30	1992-93	NGKBR7HS		
30 Marathon 698B	2	30		NGKBR7HS		CHARL82C
40 Marathon, 2 Cyl.	2	40	1995-02	NGKBP8HN-10		
40 2, 3 Cyl	2	40	1998-01	NGKBP8HN-10		
K40 6F5 2 Cyl	2	40	1984-00	NGKBR7HS		
40, 2 Cyl	2	40	1989-97	NGKBUZHW-2		
40 Marathon 6F6	2	40	1985-94	NGKBR7HS		
40C 6E9, 40A 676A, 40B 675B, W40 676B	2	40	1981-94	NGKBR8HS	NGKBR8HIX	CHAQL78C
W40 6F6	2	40		NGKBR7HS		
45 Jet 3 Cyl	2	45	1995-01	NGKBP8HN-10		
45 Bodensee 4 Cyl	2	45	1995-98	NGKDPR6EA-9		
45 4 Cyl	2	45	1986-89	NGKBUZHW-2		
48 670	2	48		NGKBR7HS		
W48 670	2	48		NGKBR7HS		
50	2	50	1991-01	NGKBP8HN-10		
50 4 Cyl	2	50	1986-90	NGKBUZHW		
50 4 Cyl	2	50	1980-85	NGKBUZHW-2		
55 Marathon	2	55	1991-02	NGKBP8HN-10		
M55 663 (E004041+ / EL315379+)	2	55		NGKB8HS-10		CHAL78C
M55 663 (-E004040 / -EL315378)	2	55		NGKBR8HS		CHAQL78C
Marathon 55 663 / W55 663	2	55		NGKBR8HS	NGKBR8HIX	CHAQL78C
60 Marathon	2	60	1995-02	NGK8H-N-10		
60	2	60	1991-01	NGK8H-N-10		
60 Big Foot	2	60	1995-99	NGKBP8HN-10		
60 3 Cyl. 849cc	2	60	1984-90	NGKBUZHW		
675 (S000781+ / L302051+)	2	60		NGKB8HS-10		CHAL78C
60 6F0	2	60		NGKB8HS-10		
60 675 (-L302050 / -L000780)	2	60		NGKBR8HS	NGKBR8HIX	CHAQL78C
65 Jet	2	65	1995-01	NGKBUZHW-2		
70 3 Cyl.	2	70		NGKBUZHW		
75 Marathon	2	75	1987-91	NGKBUZHW-2		
75	2	75	1987-01	NGKBUZHW-2		
75 4 Cyl	2	75		NGKBUZHW-2		
80 Jet	2	80	1995-01	NGKBP8HN-10		
80 4 Cyl	2	80		NGKBUZHW-2		
85	2	85		NGKBUZHW-2		
90	2	90	1987-01	NGKBUZHW-2		
90	2	90		NGKBUZHW		
100	2	100	1988-99	NGKBP8HN-10		
105 Jet, 6 Cyl	2	105	1995-99	NGKBU8H		CHAQL6VC
115 4Cyl	2	115	1989-02	NGKBP8HN-10		
115	2	115	1977-88	NGKBUZHW		
EFI, 4 Cyl (1B366823+)	2	115		NGKLFR6A-11		
125	2	125	1994-04	NGKBP8HN-10		
135	2	135	2000-01	NGKBPZ8HS-10		CHAQL78YC
135	2	135	1986-99	NGKBU8H		
135 Marathon	2	135	1986-99	NGKBU8H		
135 Work	2	135	1986-93	NGKBU8H		CHAQL6VC
140 Jet	2	140	1995-99	NGKBU8H		CHAQL6VC
140 6 Cyl	2	140		NGKBUZHW		

Modelo / Model / Modello	Tiempos / Strokes / Tempi	HP	Años / Years / Anni	Ref. NGK	Ref. NGK IRIDIUM	Ref. CHAMPION
150	2	150	2000-01	NGKBPZ8HS-10		
150 EFI	2	150	2000-01	NGKBPZ8HS-10		CHAQL78YC
150 EFI	2	150	1997-99	NGKBU8H		CHAQL6VC
150	2	150	1979-99	NGKBU8H		
150 Magnum EFI	2	150	1993-97	NGKBU8H		CHAQL6VC
150 Magnum III	2	150	1992-97	NGKBU8H		
150 Magnum II	2	150	1988-91	NGKBU8H		
150 Magnum	2	150		NGKBU8H		
150 Work	2	150		NGKBU8H		
175 EFI	2	175	1998-99	NGKBU8H		
175	2	175	1978-98	NGKBU8H		
175 Magnum EFI	2	175	1991-97	NGKBU8H		CHAQL6VC
175 SKI	2	175	1989-94	NGKBU8H		CHAQL78YC
175 EFI	2	175	2000-01	NGKBPZ8HS-10		
200 EFI	2	200	1998-99	NGKBU8H		
200	2	200	1979-99	NGKBU8H		
200 Magnum EFI	2	200	1989-97	NGKBU8H		CHAQL6VC
200	2	200	2000	NGKBPZ8HS-10		
200 EFI	2	200	2000	NGKBPZ8HS-10		CHAQL78YC
200 Super Magnum EFI	2	200	1997	NGKBU8H		CHAQL6VC
200 Magnum EFI	2	220	1987-88	NGKBU8H		
3.0L Marathon	2	225	1994-01	NGKBU8H	NGKBR8HIX	
225 EFI/Carb	2	225	1995-04	NGKBU8H	NGKBR8HIX	
Magnum EFI	2	250	1996-01	NGKBR8HS	NGKBR8HIX	CHAQL78C
250 3.4L	2	250	1989-90	NGKBU8H		CHAQL6VC
2.5L EFI	2	260	1995-98	NGKBU8H		
2.5L EFI	2	265	1997	NGKBU8H		CHAQL6VC
275 3.4L	2	275	1991-94	NGKBU8H		CHAQL6VC
2.5L Drag EFI V6	2	300	1997-98	NGKBUZHW		

JUEGOS DE CABLES, ALTO RENDIMIENTO
HD SPARK PLUG WIRE SET
KIT CAVI CANDELE, ALTE PRESTAZIONI

Núcleo del cable de Kevlar de 8 mm antimagnético. Funda de silicona amarilla. Terminales bujías con muelle de acero inox. Terminal del distribuidor de cobre. Terminales bobina. Silicona resistente a altas temperaturas. Garantía de 5 años.
Antimagnetic Kevlar core. Yellow silicone boot & jacket. SS snaplock. Brass distributor terminal. Coil terminals. High resistant silicone. 5 year warranty.
Nucleo del cavo di Kevlar da 8 mm antimagnetico. Copertura di silicone gialla. Terminali candele con molle di acciaio inox. Terminale lato spinterogeno in rame. Terminale Bobine. Silicone resistente alle alte temperature. Garanzia di 5 anni.

Ref.	R.O.		
REC15-201		5"	12,7 cm
REC15-202		7"	17,78 cm
REC15-203	84-813715A1	9"	22,86 cm
REC15-204		12"	30,48 cm

Ref.	R.O.
REC84-813715A8	84-813715A8

MOTORES / ENGINES / MOTORI
100, 115, 125 & 80 JET(4 Cyl)

Ref.	R.O.	Cables / Wires / Cavi	Motor / Engine / Motore
REC84-881908T3	84-881908T	3	Mercury 30-40- EFI 3 cyl
REC84-881908T4	84-881908T	4	Mercury 40-60- EFI 4 cyl

MOTORES / ENGINES / MOTORI
4 Tiempo / Stroke / Tempi

NEW

KIT CABLES / CABLE KIT / KIT CAVI

Ref.	R.O.
REC84-813706A26	84-99215A26, 84-813706A26

PIPA PARA BUJÍAS
SPARK PLUG PIPE
GOMITO PER CANDELE

Ref.	R.O.
CHAPROSU	

Pipa de silicona para bujía con resistor. Conexión a prueba de agua.
Silicone pipe with resistor. Waterproof conection.
Gomito in silicone per candele. Connessione a prova di acqua.

SILEMBLOCKS

Ref.	R.O.	Arandelas / Washer / Rondella
REC78249	78249	3/4"

MOTORES / ENGINES / MOTORI
105-140 JET
MAGNUM II, III
V-135 - V-225
XR4 & XR6

Ref.	R.O.	Arandelas / Washer / Rondella
REC78687T	78687	1"

MOTORES / ENGINES / MOTORI
105-140 JET
MAGNUM II, III
V-135 a/ to V-225
XR4 & XR6

Ref.	R.O.
PAF8-02000100	853771004
PAF8-00000002	803775006
PAF8-00000100	895167001

NEW

MOTORES / ENGINES / MOTORI
8, 9.8 HP (4T / 4 Strokes / 4 Tempi)
(209 cc)

DESPIECE MOTOR
ENGINE PARTS
PARTI DEL MOTORI

4 STROKES TIEMPOS

8 (BODENSEE) (INT.)
9.9 (232 CC)
(SERIES OH000058+, OH017100-->OH017265)

NEW

Ref.	R.O.
REC6G8-W0001-A3	27-825847A95

Kit de juntas
Gasket set
Kit de guarnizione

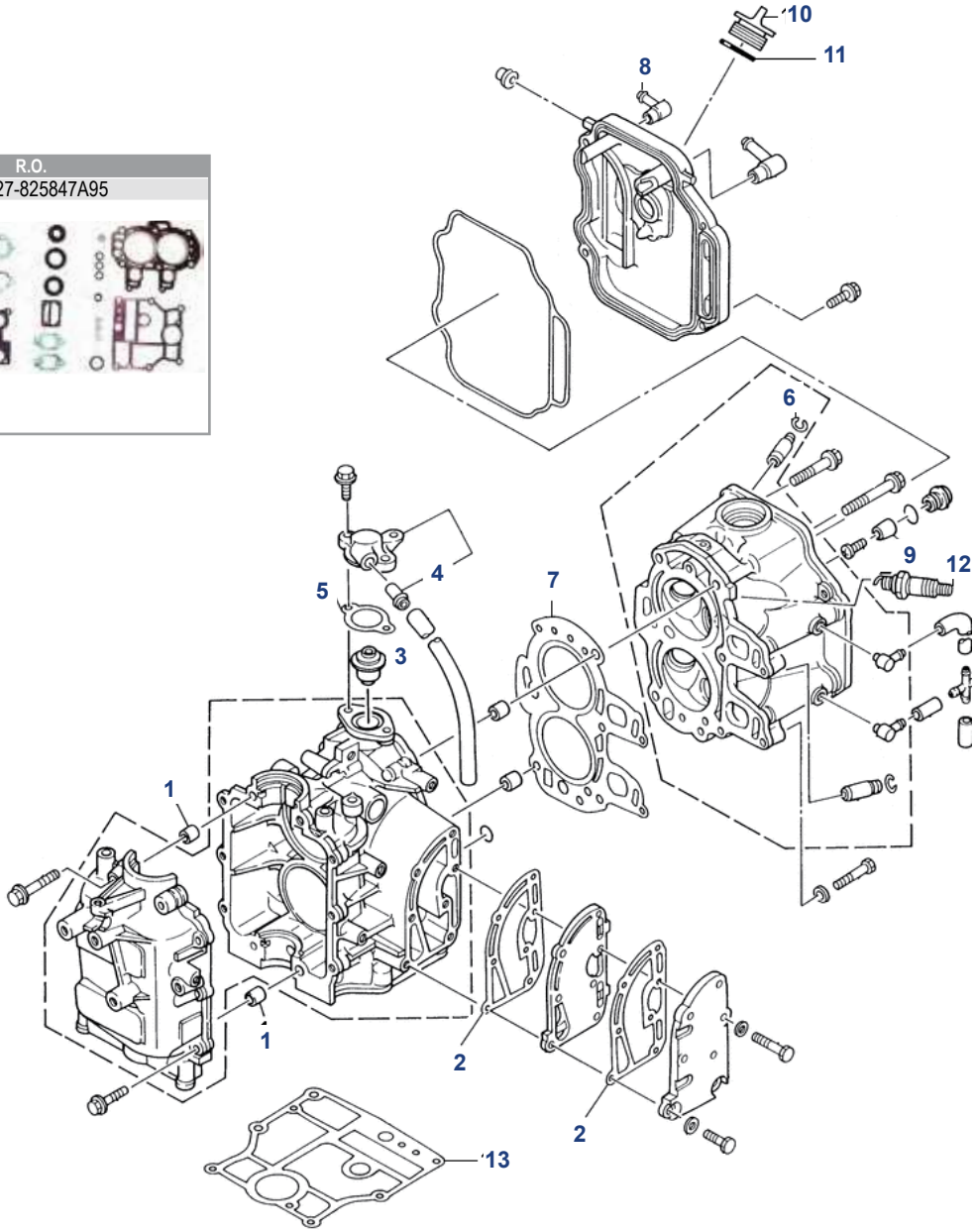

Nº	Ref.	R.O. OEM	Descripción	Description	Descrizione	Cantidad Quanty Quantità
1	**PAF15-07000001**	17-825689	PIN	PIN	SPINOTTO	2
2	**REC6G8-41112-02**	27-825693	JUNTA	GASKET	GUARNIZIONE	2
3	**PAT15-04000010**	825212T02	TERMOSTATO	THERMOSTAT	TERMOSTATO	1
4	**PAF15-07010006**	8830591	PIPA	UNION TUBE 2	TUBO	1
5	**REC6G8-12414-A0**	27-825701	JUNTA TAPA TERMOSTATO	GASKET	GUARNIZIONE COPERCHIO TERMOSTATO	1
6		53-825038	CIERRE	LOCK	FERMO	4
7	**REC6G8-11181-A1**	27-8254821	JUNTA CULATA	HEAD CYLINDER GASKET 1	GUARNIZIONE TESTATA	1
8	**PAF15-04000005**	22-83326M	PIPA	HOSE NIPLE	TUBO	2
9	**CM6G8-11325-00**	825435	ÁNODO	ANODE	ANODO	1
10	**PAF15-07050004**	859578A1	TAPÓN ACEITE	OIL PLUG	TAPPO OLIO	1
11	**PAJASOF40431-025**	25-8M0052669	TÓRICA	O-RING	O-RING	1
12	**NGKCR6HS**	33-827859	BUJÍA	SPARK PLUG	CANDELA	2
13	**REC6G8-11351-A0**	27-825847	JUNTA BASE MOTOR	GASKET ENGINE	GUARNIZIONE MOTORE	1

4 STROKES TIEMPOS

8 / 9.9 HP (209CC) (P32500+)

NEW

Ref.	R.O.
REC3V1-87121-0	27-835427A04

Kit de juntas
Gasket set
Kit de guarnizione

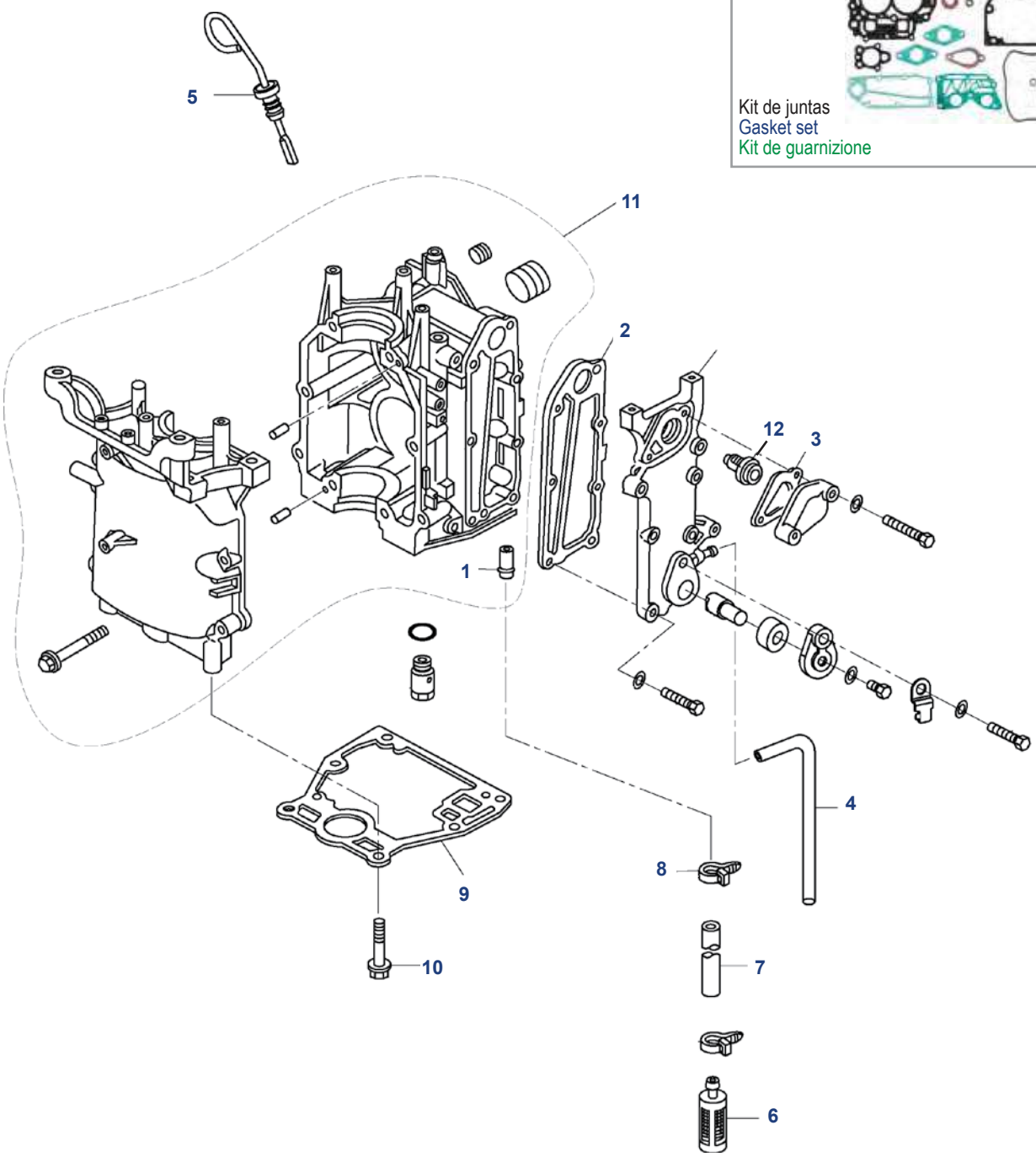

Nº	Ref.	R.O. OEM	Descripción	Description	Descrizione	Cantidad Quanty Quantità
1	**PAF8-05010002**	22-822644001	RACORD	NIPPLE	RACCORDO	1
2	**PAF8-05010004**	27-834952001	JUNTA ESCAPE	GASKET, EXHAUST COVER	GUARNIZIONE SCARICO	1
3	**PAF8-05010005**	27-853702005	JUNTA TERMOSTATO	GASKET, THERMOSTAT COVER	GUARNIZIONE TERMOSTATO	1
4	**PAF8-05000024**	35-851848003	TUBO	WATER PIPE	TUBO	1
5	**PAF8-00000200**	803512001	MEDIDOR NIVEL ACEITE	OIL LEVEL GAUGE	MISURATORE LIVELLO OLIO	1
6	**PAF8-05000800**	35-895152002	FILTRO ACEITE	OIL STRAINER	FILTRO OLIO	1
7	**PAF8-05000017**	32-895153	MANGUERA	HOSE	TUBO	1
8	**PAF8-05000025**	54-816311T	CLIP	HOOP	CLIP	2
9	**PAF8-00000004**	27-835427003	JUNTA BASE MOTOR	GASKET, ENGINE BASEMENT	GUARNIZIONE BASE MOTORE	1
10	**PAF8-00000003**	10-89514001	TORNILLO M8x35	BOLT M8x35	VITE M8x35	6
11	**PAF8-05010000**	878-815013T06	BLOQUE COMPLETO	CRANKCASSE ASSY	BLOCCO MOTORE	1
12	**RM855676002**	855676002	TERMOSTATO	THERMOSTAT	TERMOSTATO	1

4 STROKES TIEMPOS

8 / 9.9 HP (209CC) (P32500+)

NEW

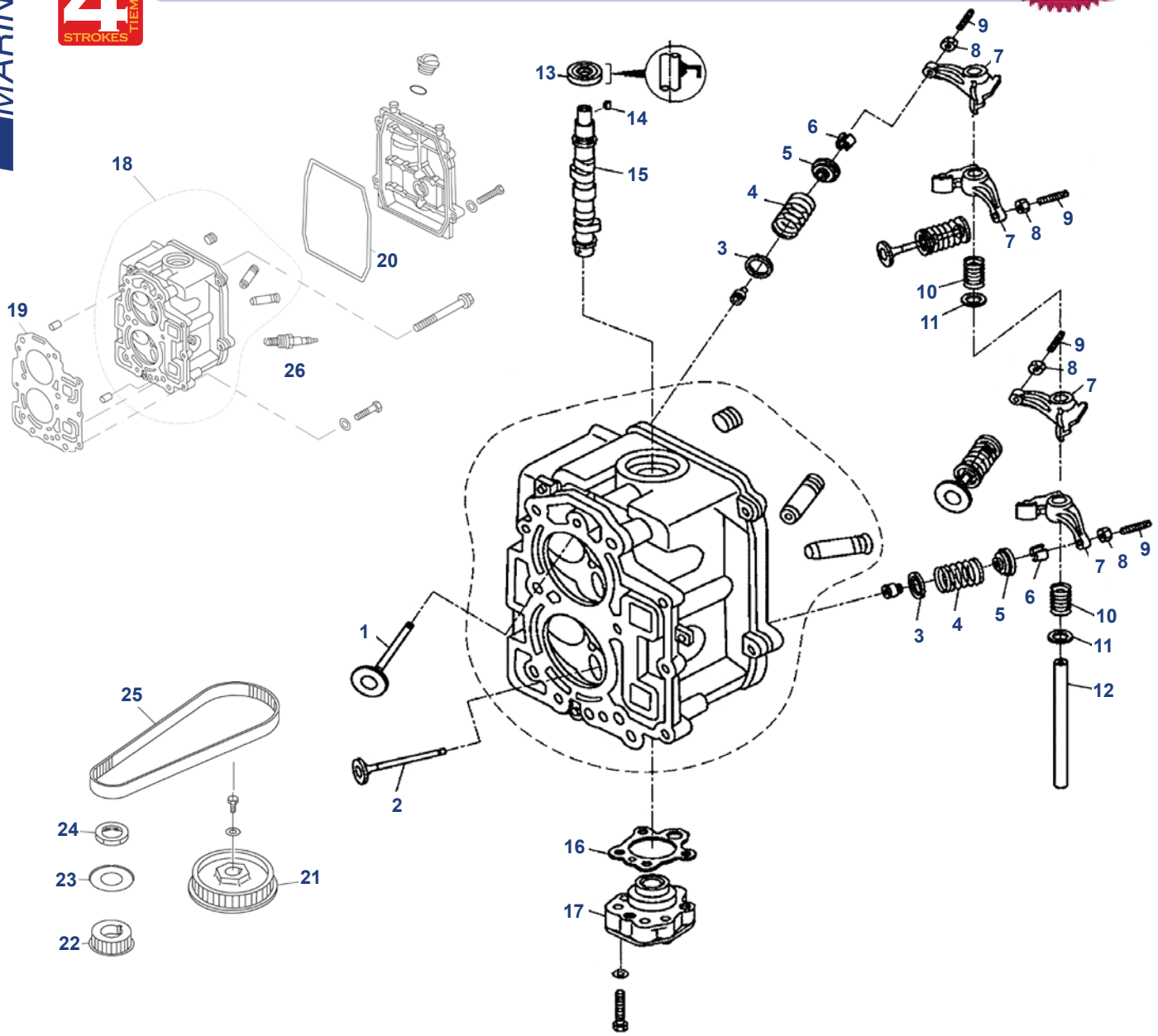

Nº	Ref.	R.O. OEM	Descripción	Description	Descrizione	Cantidad Quanty Quantità
1	**PAF8-05030001**	850838T01	VÁLVULA ADMISIÓN	VALVE INTAKE	VALVOLA ASPIRAZIONE	2
2	**PAF8-05030002**	850839T01	VÁLVULA ESCAPE	VALVE EXHAUST	VALVOLA SCARICO	2
3	**PAF8-05030004**	855959001	ASIENTO MUELLE	SEAL, VALVE SPRING	SIGILLO MOLLA	4
4	**PAF8-05030005**	24-803554005	MUELLE VÁLVULA	SPRING VALVE	VALVOLA MOLLA	4
5	**PAF8-05030006**	822650001	RESORTE VÁLVULA	RETAINER, VALVE SPRINGER	MOLLA VALVOLA	4
6	**PAF8-05030007**	28-803556	SEGURO	COTTER, VALVE	CHIUSURA DI SICUREZZA	8
7	**PAF8-05030200**	850841002	BALANCÍN	ROCKER	BILANCERE	4
8	**PAF15-07040304**	11-826150001	TUERCA	LOCK NUT	GHIERA	4
9	**PAF15-07040303**	10-825046001	TORNILLO AJUSTE	SCREW, VALVE ADJUSTING	VITE	4
10	**PAF8-05030009**	24-825452001	MUELLE	SPRING ROCKER	MOLLA	2
11	**PAF8-05030015**	12-895118001	ARANDELA	BUSHER, ROCKER SPRING	RONDELLA	2
12	**PAF8-005030010**	850842001	EJE	SHAFT ROCKER	ASSE	1
13	**PAF8-05030011**	26-825455001	RETÉN ACEITE	OIL SEAL 18x35x7.8 mm	PARAOLIO	1
14	**PAT3.6-04000006**	28-95229	CHAVETA	KEY	CHIAVETTA	1
15	**PAF8-05030008**	834956005	ÁRBOL DE LEVAS	CRAMSHAFT	ALBERO MOTORE	1
16	**PAF8-05030012**	27-853523001	JUNTA BOMBA ACEITE	OIL PUMP GASKET	GUARNIZIONE POMPA OLIO	1
17	**PAF8-05030300**	834967Y03	BOMBA ACEITE	OIL PUMP	POMPA OLIO	1
18	**PAF8-05030100**	900-835430T03	CULATA	CYLINDER HEAD ASSY	TESTATA	1
19	**PAF8-05000100**	27-850836001	JUNTA CULATA	CYLINDER HEAD GASKET	GUARNIZIONE TESTATA	1
20	**PAF8-05000002**	27-803508017	JUNTA TAPA CULATA	CYLINDER HEAD COVER GASKET	GUARNIZIONE COPERCHIO TESTATA	1
21	**PAF8-05030400**	43-834973001	POLEA	DRIVER PULLEY	PULEGGIA	1
22	**PAF8-05010014**	43-834955001	POLEA	DRIVER PULLEY	PULEGGIA	1
23	**PAF8-05010015**	895119	ARANDELA	BELT GUIDER	RONDELLA	1
24	**PAF8-05010016**	11-855679001	TUERCA	NUT	DADO	1
25	**PAF8-05000004**	57-895120	CORREA	TIMING BELT	CINGHIA DI DISTRIBUZIONE	1
26	**NGKDCPR6E**	33-803507	BUJÍA	SPARK PLUG	CANDELA	1

8 / 9.9 HP (209CC) (P32500+)

NEW

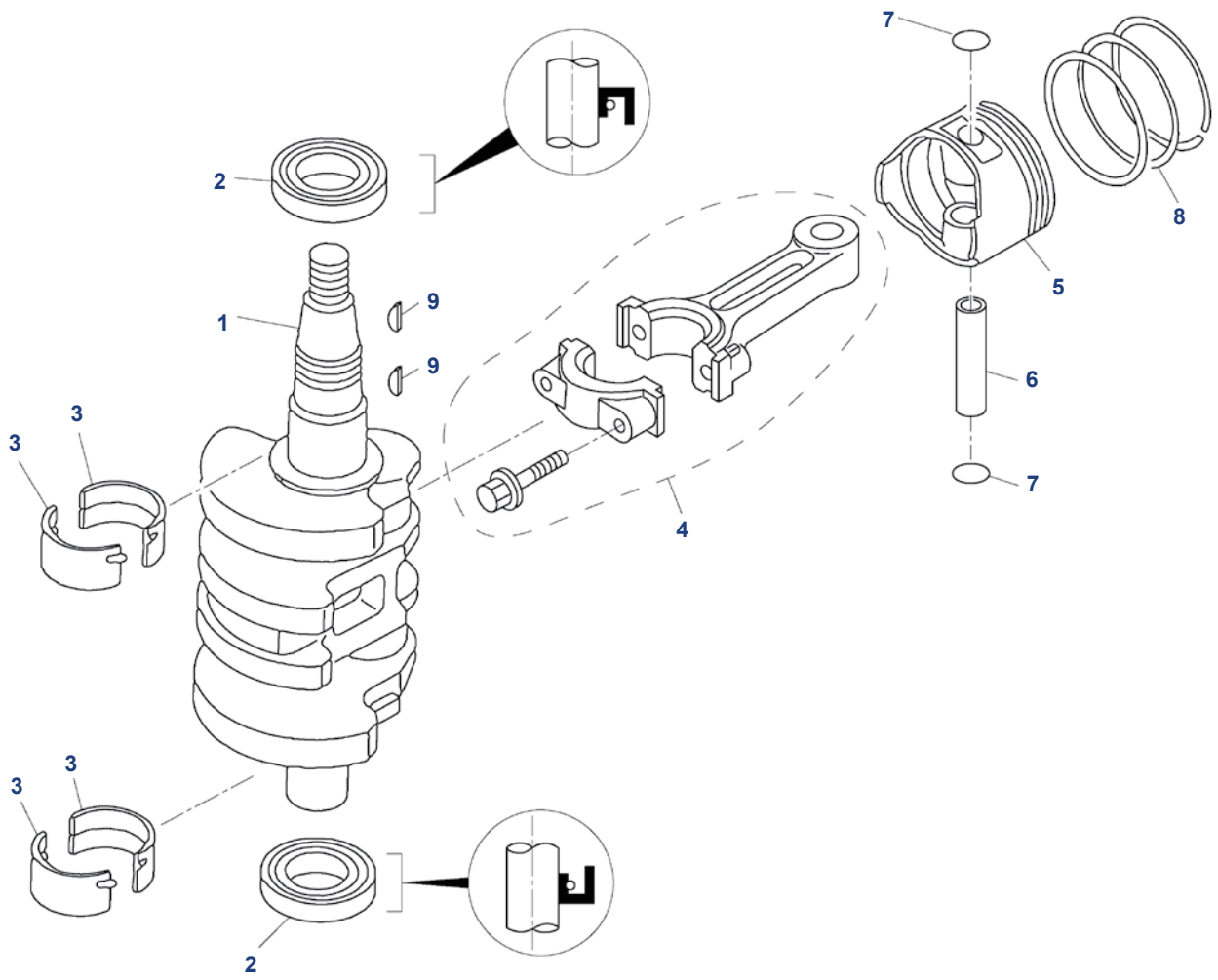

Nº	Ref.	R.O. OEM	Descripción	Description	Descrizione	Cantidad Quanty Quantità
1	**PAF8-05020001**	400-834957T01	CIGÜEÑAL	CRANK	ALBERO MOTORE	1
2	**PAF8-05010012**	26-855681001	RETÉN ACEITE	OIL SEAL	PARAOLIO	2
3	**PAF8-05010009**	31-834960T08	COJINETE	BUSH	BRONZINA	4
4	**PAF8-05020200**	600-834961002	BIELA	CONNENCTING ROD	BIELLA	2
5	**PAF8-05020101**	700-834963A02	PISTÓN	PISTON	PISTONE	2
6	**PAF8-05020105**	41-825713001	PIN	PIN, PISTON	SPINOTTO	2
7	**PAF15-07020005**	53-16057	CLIP	CIRCLIP	CLIP	4
8	**PAF8-05020102**	39-8M0055809	KIT AROS	RING SET	KIT FASCE	1
9	**PAF4-04000019**	28-825666001	CHAVETA	KEY	CHIAVETTA	2

4 STROKES TIEMPOS

8 (BONDESEE) (INT.) (OP086824 --> OP4000999)
9.9 (323 CC) (OP075166 --> OP400999)
13.5 (INT.) (OP134638+)
15 (9973100+)

NEW

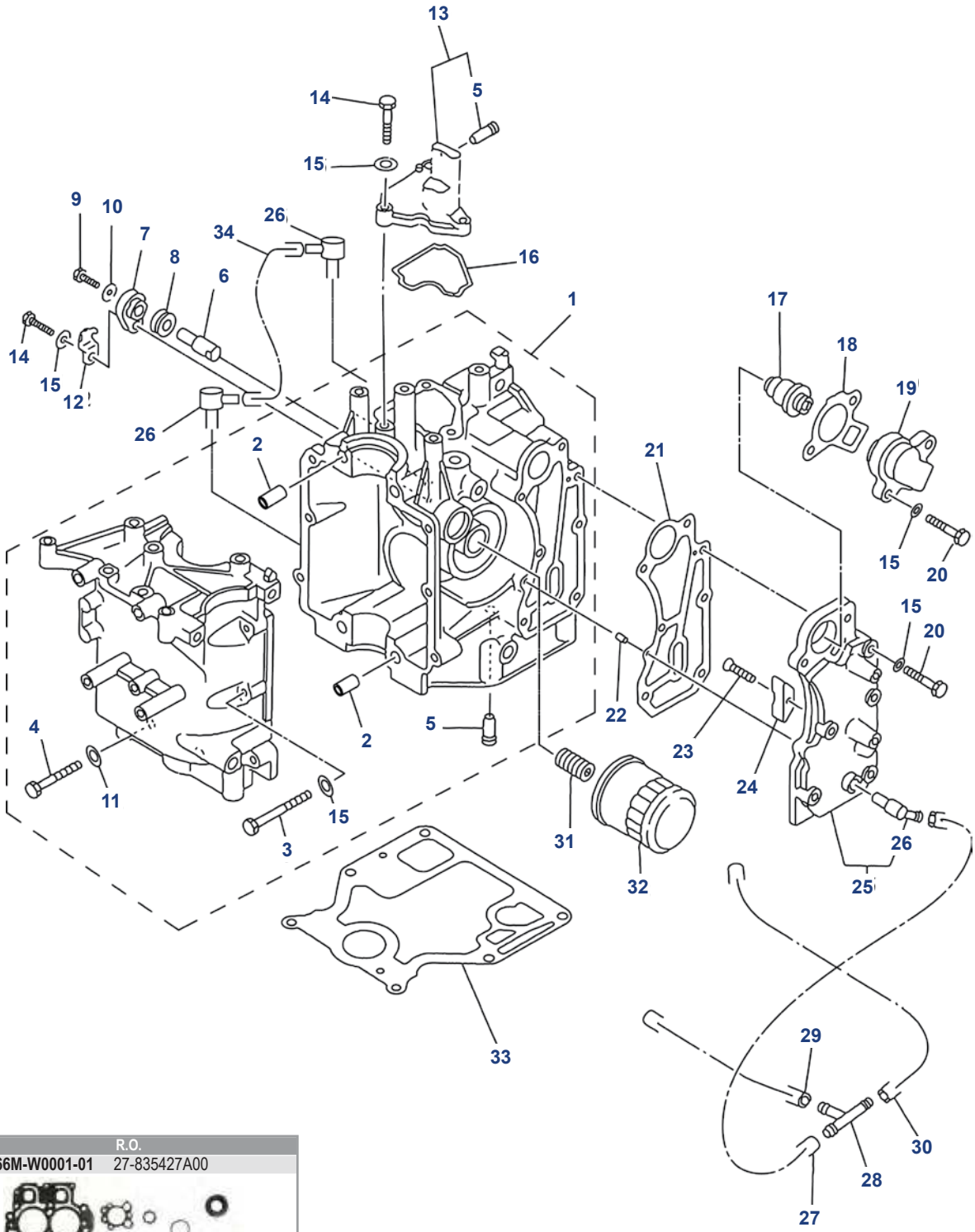

Ref.	R.O.
REC66M-W0001-01	27-835427A00

Kit juntas de motor
Power head gasket kit
Kit guarnizione motore

Nº	Ref.	R.O. OEM	Descripción	Description	Descrizione	Cantidad Quanty Quantità
1	**PAF15-07010000**	8M0055024	BLOQUE MOTOR	CRANKCASE ASSY	BLOCCO MOTORE	1
2	**PAF15-07000001**	17-825689	PIN	PIN, HOLLOW	SPINOTTO	2
3	**PAGB/T5783-2000**	10-43092M	TORNILLO	BOLT, HEXAGON	VITE	6
4	**PAGB/T5783-2000**	10-41884M	TORNILLO	BOLT, HEXAGON	VITE	4
5	**PAF15-07010006**	22-822644	PIPA	PIPE, JOINT	TUBO	2
6	**PAF15-07010008**	855678	ÁNODO	ANODE	ANODO	1
7	**PAF15-07010011**	855776	TAPA ÁNODO	COVER, ANODE	COPERTURA ANODO	1
8	**PAF15-07010009**	27-825040	ALOJAMIENTO ÁNODO	GROMMET, ANODE	ALLOGGIAMENTO ANODO	1
9	**PAGB/T5783-2000**	10-855778	TORNILLO	SCREW, PAN HEAD	VITE	1
10	**PAGB/T97.1-8**		ARANDELA	WASHER 5	RONDELLA	1
11	**PAGB/T97.1-8**		ARANDELA	WASHER 8	RONDELLA	4
12	**PAF15-07010012**	855779	PLACA ÁNODO	PLATE, ANODE	PIASTRA ANODO	1
13	**PAF15-07010013**	834974	TAPA	COVER, BREATHER	COPERCHIO	1
14	**PAGB/T5783-2000**	10-8257021	TORNILLO	BOLT	VITE	4
15	**PAGB/T97.1-8**		ARANDELA	WASHER 6	RONDELLA	17
16	**PAF15-07010014**	26-850850	JUNTA TAPA	BREATHER GASKET	GUARNIZIONE COPERCHIO	1
17	**PAF15-07000031**	855676003	TERMOSTATO	THERMOSTAT	TERMOSTATO	1
18	**PAF15-07010022**	27-824853	JUNTA TERMOSTATO	GASKET, THERMOSTAT	GUARNIZIONE TERMOSTATO	1
19	**PAF15-07010021**	8250311	TAPA TERMOSTATO	COVER, THERMOSTAT	COPERCHIO TERMOSTATO	1
20	**PAGB/T5783-2000**	10-82500930	TORNILLO	BOLT	VITE	7
21	**PAF15-07010018**	27-834952002	JUNTA	GASKET, EXHAUST OUTER COVER	GUARNIZIONE	1
22	**PAF15-07000013**		PIN	O-RING	SPINOTTO	2
23	**PAGB/T5783-2000**		TORNILLO	SCREW	VITE	1
24	**PAF15-07010026**		ÁNODO	ANODE	ANODO	1
25	**PAF15-07010019**	834953T02	TAPA	OUTTER COVER, EXHAUST	COPERCHIO	1
26	**PAF15-04000005**	22-83326M	PIPA	WATER NIPPLE	TUBO	3
27	**PAF15-05000012**		TUBO	HOSE A	TUBO	1
28	**PAF15-05000011**		CONECTOR	THREE-WAY PIPE	CONNETTORE	1
29	**PAF15-05000013**		TUBO	HOSE B	TUBO	1
30	**PAF15-05000014**		TUBO	HOSE C	TUBO	1
31	**PAF15-07010003**	822625	TORNILLO	BOLT UNION	VITE	1
32	**REC35-822626Q03**	35-822626Q03	FILTRO ACEITE	OIL CLEANER	FILTRO DELL'OLIO	1
33	**PAF15-00000014**	27-8354272	JUNTA BASE MOTOR	GASKET, ENGINE	GUARNIZIONE BASE MOTORE	1
34	**PAF15-07010007**		TUBO	HOSE, RETURN OIL	TUBO	1

4 STROKES TIEMPOS

8 (BONDESEE) (INT.) (OP086824 --> OP4000999)
9.9 (323 CC) (OP075166 --> OP400999)
13.5 (INT.) (OP134638+)
15 (9973100+)

NEW

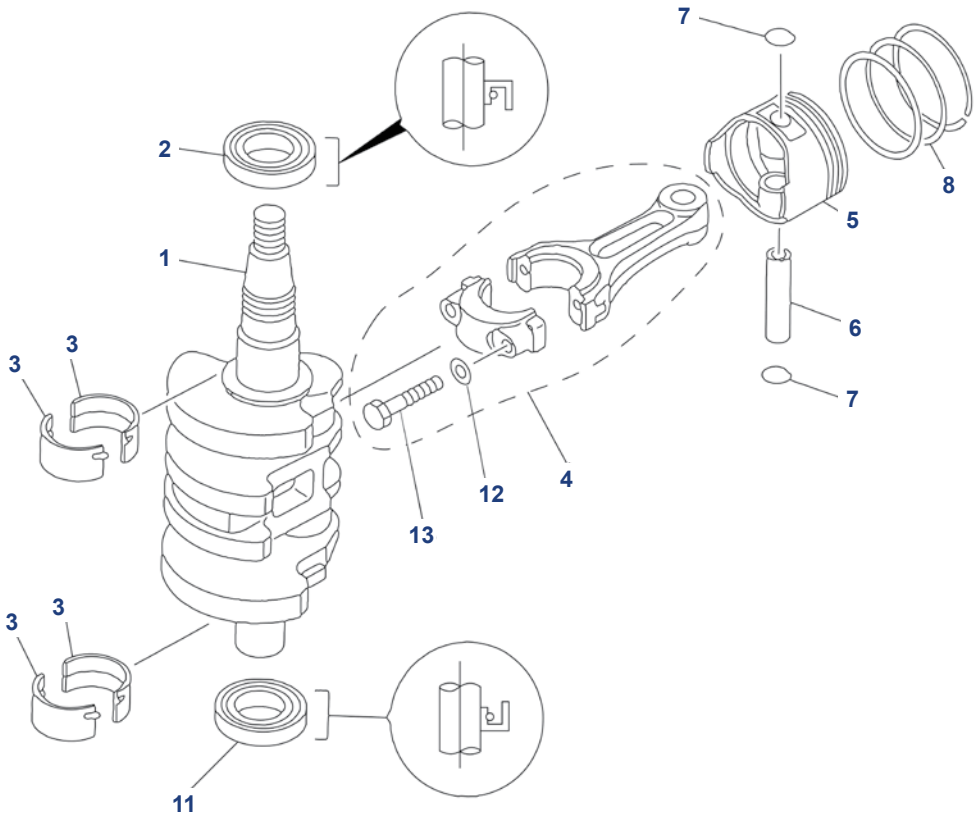

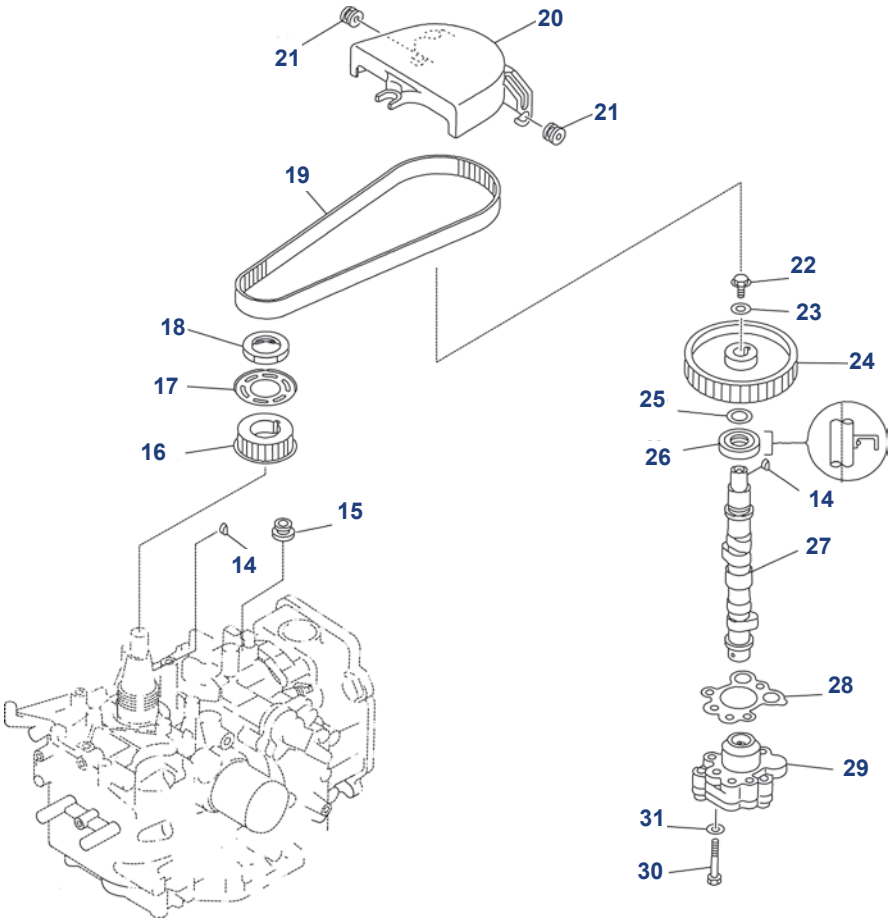

Nº	Ref.	R.O. OEM	Descripción	Description	Descrizione	Cantidad Quanty Quantità
1	**PAF15-07030000**	400-834957	CIGÜEÑAL	CRANK ASSY	ALBERO MOTORE	1
2	**PAF15-07030006**	26-855680	RETÉN	OIL SEAL A	PARAOLIO	1
3	**PAF15-07010024**	31-834960	COJINETE BANCADA	MAIN BEARING	CUSCINETTO	4
4	**PAF15-07020100**	600-834961A1	BIELA	ROD, CONNECTING	BIELLA	2
5	**PAF15-07020001**	700-834963	PISTÓN	PISTON	PISTONE	2
6	**PAF15-07020006**	41-825713	BULÓN	PIN, PISTON	BULLONE	2
7	**PAF15-07020005**	53-82343M	CLIP	CIRCLIP	CLIP	4
11	**PAF15-07030007**	26-855681	RETÉN	OIL SEAL B	PARAOLIO	1
12		12-855682	ARANDELA	WASHER, PLATE	RONDELLA	4
13		10-850844	TORNILLO	BOLT CONNECTING ROD	VITE	4
14	**PAGB/T1099-1979**	28-825666	CHAVETA	KEY, WOODRUFF	CHIAVETTA	1
15	**PAF15-07010027**	25-855690	GOMA	RUBBER RING B	GOMMINO	1
16	**PAF15-07030003**	43-834955	POLEA DENTADA	BELT PULLEY, TIMING	PULEGGIA	1
17	**PAF15-07030004**	12-850843	ARANDELA	WASHER	RONDELLA	1
18	**PAF15-07030005**	1-855679	TUERCA	NUT	GHIERA	1
19	**PAF15-07000002**	835392	CORREA DISTRIBUCIÓN	BELT TIMING	CINGHIA DISTRIBUZIONE	1
20	**PAF15-07000024**	855691	TAPA	COVER, DUST	COPERCHIO	1
21	**PAF15-07050003**	25-8527681	GOMA	RING RUBBER A	GOMMINO	2
22	**PAGB/T5783-2000**	10-826957M	TORNILLO	BOLT	VITE	1
23	**PAGB/T5287-6**	12-825498	ARANDELA	BIG WASHER	RONDELLA	1
24	**PAF15-07040018**	43-834973	POLEA	BELT PULLEY, DRIVEN	PULEGGIA	1
25	**PAF15-07040017**	12-82710M	ARANDELA	WASHER	RONDELLA	1
26	**PAF15-07040008**	26-825455	RETÉN	OIL SEAL	PARAOLIO	1
27	**PAF15-07040200**	834956	ÁRBOL DE LEVAS	CAMSHAFT ASSY	ALBERO MOTORE	2
28	**PAF15-07040016**	27-853523	JUNTA	MAT, AIRPROOF	GUARNIZIONE	1
29	**PAF15-07040500**	834967A1	BOMBA ACEITE	OIL PUMP ASSY	POMPA DELL'OLIO	1
30	**PAGB/T5783-2000**	10-850879	TORNILLO	BOLT	VITE	3
31	**PAGB/T97.1-8**		ARANDELA	WASHER	RONDELLA	3

4 STROKES TIEMPOS

8 (BONDESEE) (INT.) (OP086824 --> OP4000999)
9.9 (323 CC) (OP075166 --> OP400999)
13.5 (INT.) (OP134638+)
15 (9973100+)

NEW

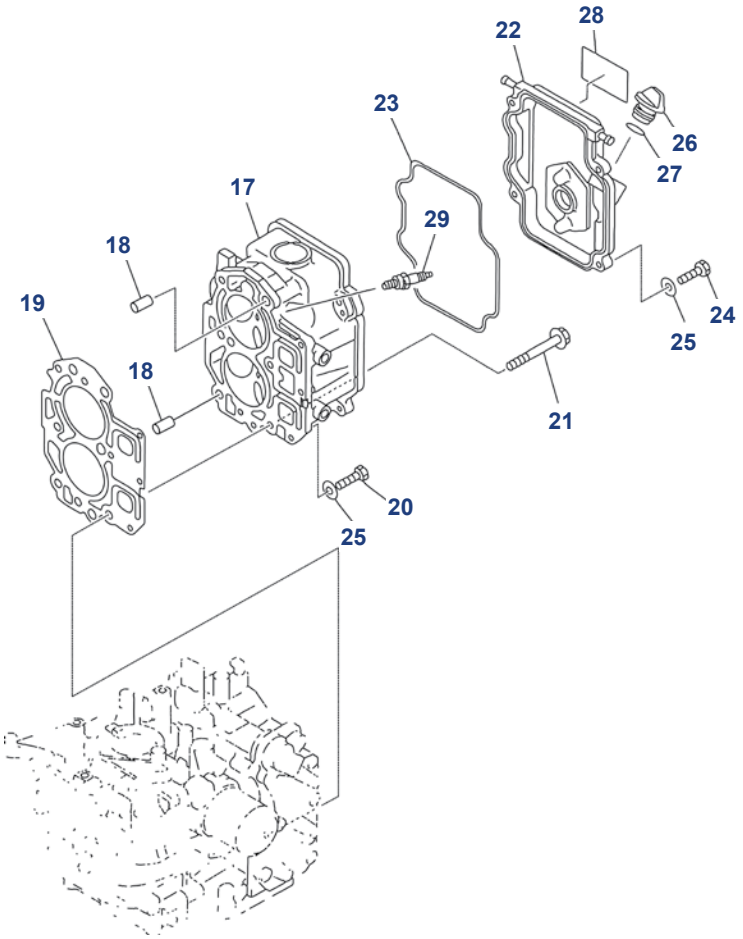

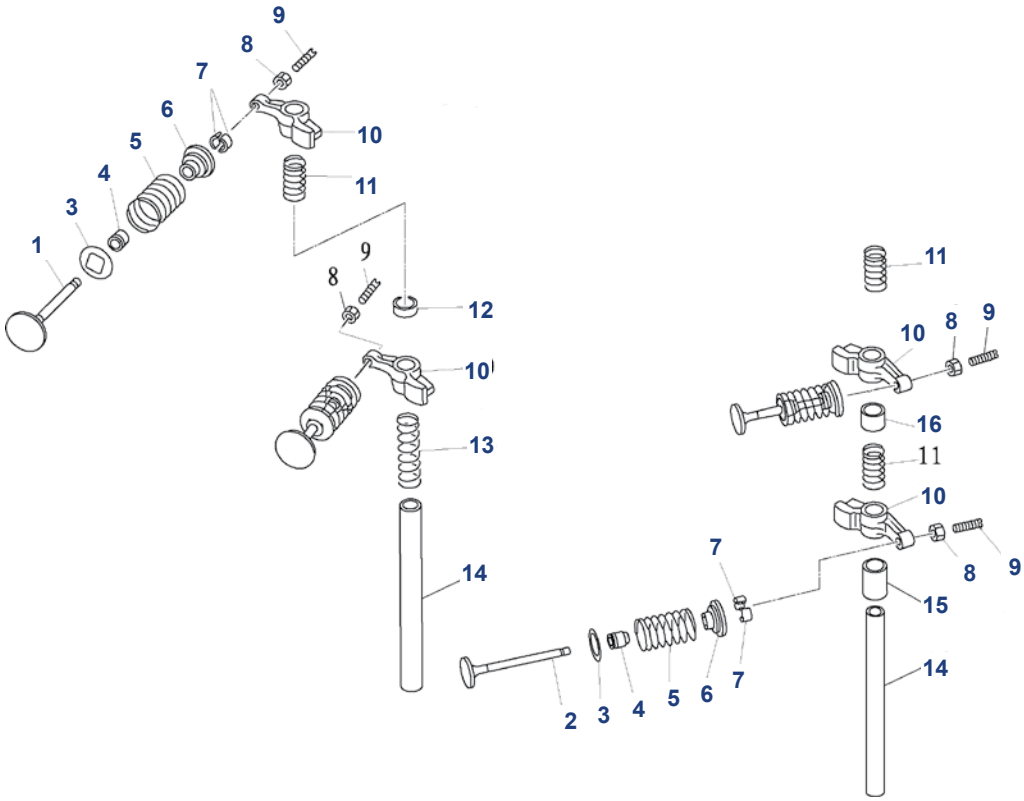

Nº	Ref.	R.O. OEM	Descripción	Description	Descrizione	Cantidad Quanty Quantità
1	**PAF15-07040001**	850838	VÁLVULA ADMISIÓN	VALVE, INTAKE	VALVOLA ASPIRAZIONE	2
2	**PAF15-07040002**	850839	VÁLVULA ESCAPE	VALVE, EXHAUST	VALVOLA SCARICO	2
3	**PAF15-07040004**	855959	ASIENTO MUELLE	SEAL, VALVE SPRING	MOLLA VALVOLA	4
4	**PAPS2700.04.03**	26-822647	RETÉN	SEAL, VALVESTEM	GUARNIZIONE	4
5	**PAF15-07040005**	24-850840	MUELLE	SPRING, VALVE	MOLLA	4
6	**PAF15-07050006**	822650	RESORTE	RETAINER, VALVE SPRING	FERMA VALVOLA	4
7	**PAF15-07040007**	28-822651	SEGURO VÁLVULA	COTTER, VALVE	VALVOLA DI SICUREZZA	8
8	**PAF15-07040304**	11-826150	TUERCA	LOCK NUT	GHIERA	4
9	**PAF15-07040303**	10-825046	REGULADOR	SCREW, VALVE ADJUSTING	REGOLATORE	4
10	**PAF15-07040301**	825451	BALANCÍN	ROCKER	BILANCERE	4
11	**PAF15-07040014**	24-825452	MUELLE	SPRING, ROCKER B	MOLLA	3
12	**PAF15-07040009**	880135	ALOJAMIENTO	BUSHER, VALVE INTAKE	GOMMINO VALVOLA	1
13	**PAF15-07040013**	24-825453	MUELLE	SPRING, ROCKER A	MOLLA	1
14	**PAF15-07040015**	850842	EJE	SHAFT, ROCKER	ASSE	2
15	**PAF15-07040012**	825451	CASQUILLO	BUSHER, VALVE EXHAUST B	COPERCHIO	1
16	**PAF15-07040011**	880134	CASQUILLO	BUSHER, VALVE EXHAUST A	COPERCHIO	1
17	**PAF15-07040000**	900-835430A1	CULATA	CYLINDER HEAD ASSY	TESTATA	1
18	**PAF15-07000001**	17-825689	PIN	HOLLOW PIN	SPINOTTO	2
19	**PAF15-07000100**	27-850836	JUNTA CULATA	GASKET, CYLINDER HEAD	GUARNIZIONE TESTATA	1
20	**PAGB/T5783-M6X25**	10-82500925	TORNILLO	BOLT, HEXAGON	VITE	3
21	**PAF15-07000028**	10-855677	TORNILLO	BOLT, FLANGE	VITE	6
22	**PAF15-07050001**	834954	TAPA BALANCINES	COVER, CYLINDER HEAD	COPERCHIO BILANCERE	1
23	**PAF15-07050002**	850837	JUNTA TAPA	SEAL, CYLINDER COVER	GUARNIZIONE TAPPO	1
24	**PAGB/T5783-M6X20**	825702	TORNILLO	BOLT, HEXAGON	VITE	4
25	**PAGB/T5783-2000**		ARANDELA	WASHER, PLATE	RONDELLA	7
26	**PAF15-07050004**	825490	TAPÓN ACEITE	PLUG, OIL	TAPPO OLIO	1
27	**PAF4-04000008**	25-825492	TÓRICA	O-RING	O-RING	1
28	**PAF15-10030001**		ADHESIVO	MARK 4	ADESIVO	1
29	**NGKDPR6EA-9**	33-827858	BUJÍA	SPARK PLUG	CANDELA	2
30	**POWERHEAD9.9-15**	802733A98	MOTOR	POWER HEAD COMPLETE	MOTORE	15

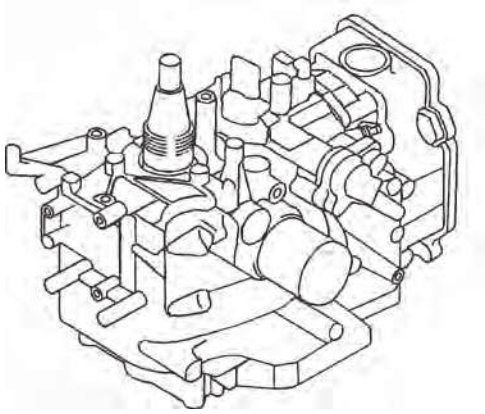

Nº 30

4 STROKES TIEMPOS

25 (9973100+)

NEW

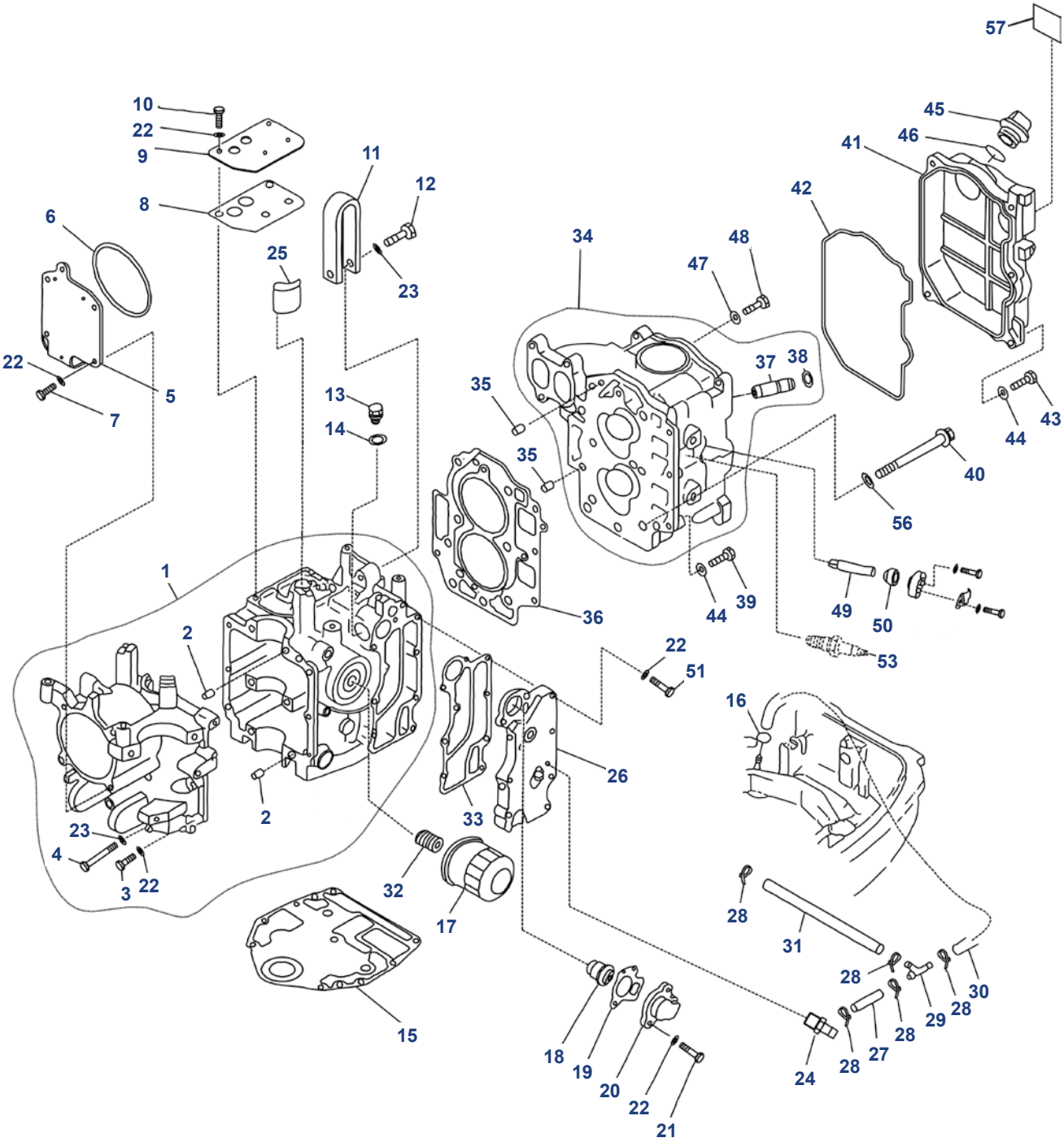

Ref.	R.O.
REC65W-W0001-00	27-830270A98

Kit juntas de motor
Power head gasket kit
Kit guarnizione motore

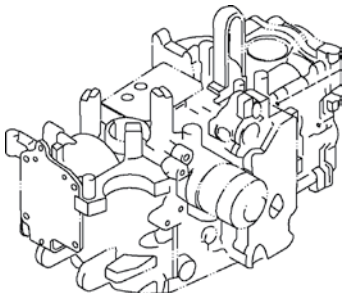

Nº	Ref.	R.O. OEM	Descripción	Description	Descrizione	Cantidad Quanty Quantità
1	**PAF25-05010000**	2806-830267T3	BLOQUE	CRANKCASE ASSY	BLOCCO	1
2	**PAF25-00000014**	17-825010	PIN	PIN, DOWEL	SPINOTTO	2
3	**PAGB/T5782-M6X35**	10-88348935	TORNILLO	BOLT, HEXAGON	VITE	6
4	**PAGB/T5782-M8X80**	10-82506182	TORNILLO	BOLT, HEXAGON	VITE	6
5	**PAF25-05000007**	8556692	TAPA	CRANKCASE	COPERCHIO	1
6	**PAGBT3452.1-97.5X1.8**	25-854722	JUNTA	SEAL	GUARNIZIONE	1
7	**PAGB/T5783-M6X20**	10-40011128	TORNILLO	BOLT, HEXAGON	VITE	4
8	**PAF25-05010108**	27-8547801	JUNTA	GASKET, BREATHERCOVER	GUARNIZIONE	1
9	**PAF25-05010109**	832734A2	TAPA	COVER, BREATHER	TAPPO	1
10	**PAGB/T5783-M6X20**	10-40011128	TORNILLO	BOLT, HEXAGON	VITE	4
11	**PAF25-05010106**	8525601	SOPORTE	HANGER, ENGINE	SUPPORTO	1
12	**PAGB/T5782-M8X35**	10-857139	TORNILLO	BOLT, HEXAGON	VITE	1
13	**PAF15-04000002**	22-479452	TORNILLO DRENAJE	BOLT, OIL DRAIN	VITE DRENAGGIO	1
14	**PAF15-04000003**		ARANDELA	WASHER	RONDELLA	1
15	**PAF25-00000013**	27-8252310	JUNTA BASE MOTOR	GASKET, ENGINE	GUARNIZIONE BASE MOTORE	1
16	**PAF4-04000030**		MUELLE	SPRING, FUEL PIPE “B”	MOLLA	1
17	**REC35-822626Q04**	35-822626Q04	FILTRO ACEITE	OIL CLEANER	FILTRO OLIO	1
18	**PAF15-07000031**	825212	TERMOSTATO	THERMOSTAT	TERMOSTATO	1
19	**PAF15-07010022**	27-824853	JUNTA TERMOSTATO	GASKET, THERMOSTAT	GUARNIZIONE TERMOSTATO	1
20	**PAF15-07010021**	8250311	TAPA TERMOSTATO	COVER, TEHRMOSTAT	TAPPO TERMOSTATO	1
21	**PAGB/T5783-M6X25**	10-88348935	TORNILLO	BOLT	VITE	2
22	**PAGB/T97.1-8**		ARANDELA	WASHER 6	RONDELLA	17
23	**PAGB/T97.1-8**		ARANDELA	WASHER 8	RONDELLA	7
24	**PAF25-05010113**	22-996642	PIPA	NIPPLE, HOSE	TUBO	1
25	**PAF25-05010107**	35-8548091	FILTRO	CLEANER	FILTRO	1
26	**PAF25-05010112**	883336T1	TAPA	OUTTER COVER, EXHAUST	TAPPO	1
27	**PAF25-03000008**		TUBO	HOSE	TUBO	1
28	**PAHT-2.5x60**		BRIDA	CLAMP	FLANGIA	5
29	**PAF15-05000011**		CONECTOR	THREE-WAY PIPE	CONNETTORE	1
30	**PAF25-03000011**		TUBO	HOSE	TUBO	1
31	**PAF25-03000009**		TUBO	HOSE	TUBO	1
32	**PAF15-07010003**	822625	TORNILLO	BOLT, UNION	VITE	1
33	**PAF25-05010111**	27-830298	JUNTA	GASKET, EXHAUST OUTER COVER	GUARNIZIONE	1
34	**PAF25-05050100**	830271T2	CULATA	CYLINDER ASSY	TESTATA	1
35	**PAF25-00000014**	17-825010	PIN	PIN, DOWEL	SPINOTTO	2
36	**PAF25-05040000**	27-830270	JUNTA CULATA	GASKET, CYLINDER HEAD	GUARNIZIONE TESTATA	1
37		825037	GUÍA VÁLVULA	VALVE GUIDE BUSH	GUIDA VALVOLA	4
38		53-825038	CLIP	CIRCLIP, GUIDEBUSH	CLIP	4
39	**PAGB/T5783-M6X25**	10-82500925	TORNILLO	BOLT, HEXAGON	VITE	6
40	**PAF25-05000002**	10-82503395	TORNILLO	BOLT, FLANGE	VITE	9
41	**PAF25-05000005**	830272A1	TAPA BALANCINES	COVER, CLYLINDER HEAD	TAPPO BILANCERE	1
42	**PAF25-05000004**	25-833103	JUNTA TAPA	SEAL,CYLINDER COVER	GUARNIZIONE TAPPO	1
43	**PAGB/T5783-M6X20**	10-40011128	TORNILLO	BOLT, HEXAGON	VITE	5
44	**PAGB/T97.1-8**		ARANDELA	WASHER, PLATE	RONDELLA	10
45	**PAF15-07050004**	825490	TAPÓN ACEITE	PLUG, OIL	TAPPO OLIO	1
46	**PAJASOF40431-025**	25-825492	TÓRICA	O-RING	O-RING	1
47	**PAF25-05050007**	27-827610	JUNTA	GASKET	GUARNIZIONE	1
48	**PAF25-05050006**	10-827607	TORNILLO	BOLT	VITE	1
49	**CM826887M**	826887M	ÁNODO	ANODE	ANODO	2
50	**PAF15-07010009**	25-825040	ALOJAMIENTO	GROMMET, ANODE	ANELLO TENUTA	2
51	**PAGB/T5783-M6X35**	10-88348935	TORNILLO	BOLT	VITE	7
52	**POWERHEAD20-25**		MOTOR	COMPLETE, POWER	MOTORE	1
53	**NGKDPR6EA-9**	33-827858	BUJÍA	SPARK-PLUG	CANDELA	2

4 STROKES TIEMPOS

25 (9973100+)

NEW

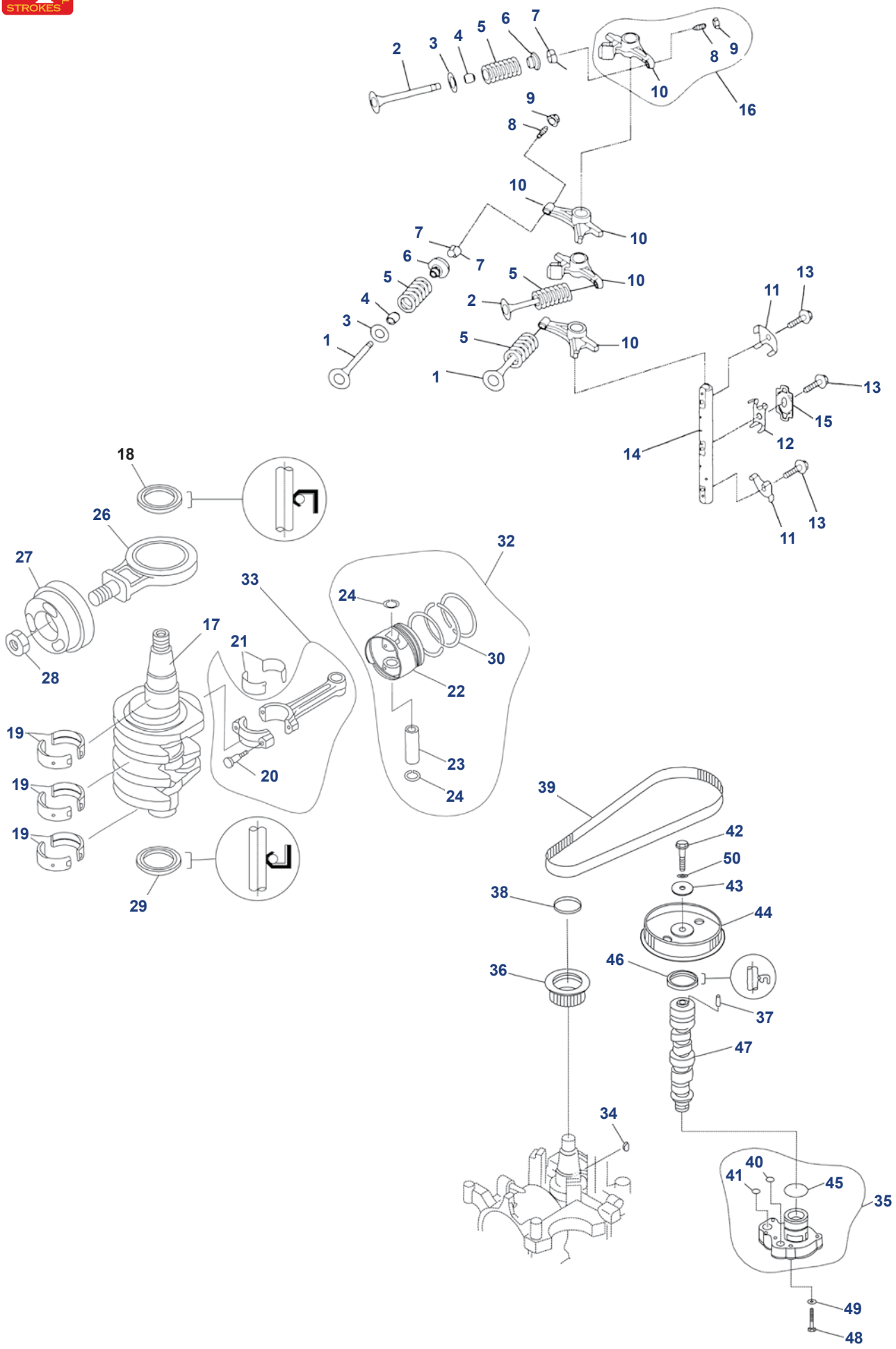

Nº	Ref.	R.O. OEM	Descripción	Description	Descrizione	Cantidad Quanty Quantità
1	**PAF25-05050001**	822649	VÁLVULA ADMISIÓN	VALVE, INTAKE	VALVOLA ASPIRAZIONE	2
2	**PAF25-05050002**	832990	VÁLVULA ESCAPE	VALVE, EXHAUST	VALVOLA SCARICO	2
3	**PAF25-05050003**	12-825044	ASIENTO MUELLE	SEAL, VALVE SPRING	MOLLA VALVOLA	4
4	**PAPS2700.04.03**	26-822647	RETÉN VÁLVULA	SEAL, VALVE STEM	GOMMINO VALVOLA	4
5	**PAF25-05050005**	24-823678	MUELLE	SPRING, VALVE	MOLLA	4
6	**PAF15-07040006**	822650	RESORTE	RETAINER, VALVE SPRING	FERMA VALVOLA	4
7	**PAF15-07040007**	28-822651	SEGURO VÁLVULA	COTTER, VALVE	VALVOLA SICUREZZA	8
8	**PAF15-07040303**	10-825046	TORNILLO	SCREW, VALVE ADJUSTING	VITE	1
9	**PAF15-07040304**	11-826150	TUERCA	NUT	GHIERA	1
10	**PAF25-05050301**	825045A2	BALANCÍN	ROCKET	BILANCERE	1
11	**PAF25-05050009**	825050	PLETINA	PLATE, BOLT STOPPER	PIASTRINA	2
12	**PAF25-05050011**	24-825052	MUELLE	SPRING	MOLLA	1
13	**PAF25-05050019**	10-82641030	TORNILLO	BOLT	VITE	3
14	**PAF25-05050008**	830274	EJE	SHAFT, ROCKET	ASSE	1
15	**PAF25-05050012**	24-825052	PLETINA	PLATE B, BOLT STOPPER	PIASTRINA	1
16	**PAF25-05050300**		BALANCÍN COMPLETO	ROCKET ASSY	BILANCERE COMPLETO	4
17	**PAF25-05020001**	2418-830269A1	CIGÜEÑAL	CRANK SHAFT	ALBERO MOTORE	1
18	**PAF25-05020003**	26-825027	RETÉN	OIL SEAL B	PARAOLIO	1
19	**PAF25-05010302-1**	23-825024	COJINETE BANCADA	MAIN BEARING	CUSCINETTI BANCO	6
19	**PAF25-05010302-2**	23-8250241	COJINETE BANCADA	MAIN BEARING	CUSCINETTI BANCO	6
20	**PAF25-05020204**	10-825010	TORNILLO	BOLT, CONNECTING ROD	VITE	2
21	**PAF25-05020203-1**	23-825021	COJINETE BIELA	PLANE BEARING, CONNECTING ROD	CUSCINETTI BIELLA	2
21	**PAF25-05020203-2**	23-8250212	COJINETE BIELA	PLANE BEARING, CONNECTING ROD	CUSCINETTI BIELLA	2
22	**PAF25-05020101**	702-833098A1	PISTÓN	PISTON	PISTONE	2
23	**PAF25-05020105**	41-825016	BULÓN	PIN, PISTON	BULLONE	2
24	**PAF25-05020106**	40-825017	CLIP	CIRCLIP	CLIP	4
26	**PAF25-05020310**	652-831876A1	BIELA	CON-ROD ASSY, BALANCE	BIELLA	1
27	**PAF25-05020301**	701-8318751	PISTÓN BALANCE	PISTON, BALANCE	CONTRO PISTONE	1
28	**PAF25-05000026**	11-81773M	TUERCA	NUT	GHIERA	1
29	**PAF25-05020002**	26-832013	RETÉN	OIL-SEAL A	GUARNIZIONE	1
31	**REC67C-11603-00**		ARO PISTÓN KIT	PISTON RING KIT	FASCIA PISTONE KIT	2
32	**PAF25-05020100**		PISTÓN COMPLETO	PISTON ASSY	PISTONE COMPLETO	2
33	**PAF25-05020200**	650-825018A1	BIELA	ROD, CONNECTING	BIELLAA	2
34	**PAF4-04000019**	28-18856M	CHAVETA	KEY, WOODRUF	CHIAVETTA	1
35	**PAF25-05050400**	852388A1	BOMBA ACEITE	OIL PUMP ASSY	POMPA OLIO	1
36	**PAF25-05000021**	833102	POLEA	BELT PULLEY, TIMING	PULEGGIA	1
37	**PAF25-05050016**	17-825956	PIN	PIN, DOWELL	SPINOTTO	1
38	**PAF25-05000022**		MUELLE	BUSH, SPRING	MOLLA	1
39	**PAF25-05000023**	831294	CORREA DISTRIBUCIÓN	BELT, TIMING	CINGHIA DISTRIBUZIONE	1
40	**PAF25-05050013**	25-826153	TÓRICA	O-RING A	O-RING	1
41	**PAF25-05050014**	25-826154	TÓRICA	O-RING B	O-RING	1
42	**PAGB/T5785-2000**	10-82761140	TORNILLO	BOLT	VITE	1
43	**PAF25-05050018**	12-4002319	ARANDELA	WASHER, PLATE	RONDELLA	1
44	**PAF25-05050017**	833104	POLEA DENTADA	BELT PULLEY, DRIVEN	PULEGGIA DENTATA	1
45	**PAF25-05050015**	25-826152	TÓRICA	O-RING C	O-RING	1
46	**PAF25-05050021**	26-825048	RETÉN	OIL SEAL	PARAOLIO	1
47	**PAF25-05050200**	2419-82500935	ÁRBOL DE LEVAS	CAMSHAFT ASSY	ALBERO MOTORE	1
48	**PAGB/T5782-M6X125**		TORNILLO	BOLT	VITE	4
49	**PAGB/T97.1-8**		ARANDELA	WASHER, PLATE	RONDELLA	4
50	**PAGB/T97.1-8**		ARANDELA	WASHER, PLATE	RONDELLA	1

4 STROKES TIEMPOS

30 CARB, EFI
40 CARB, EFI

NEW

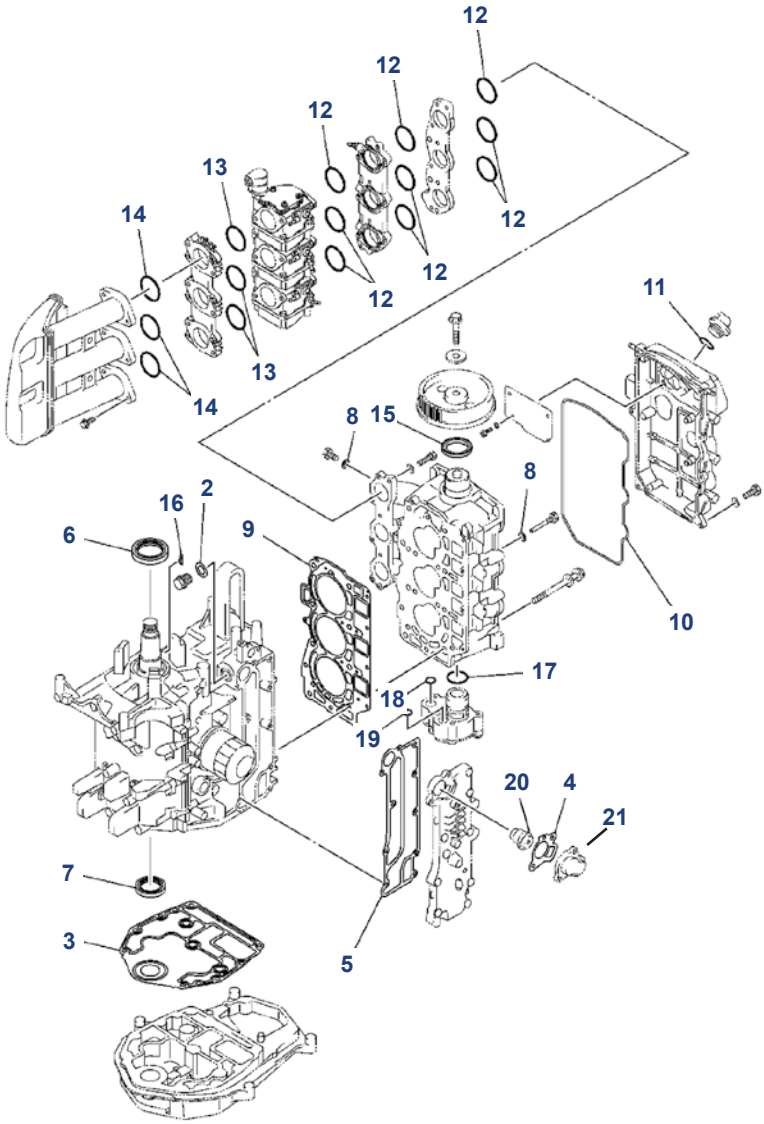

Ref.	R.O.
REC67C-W0001-01	27-825231A99

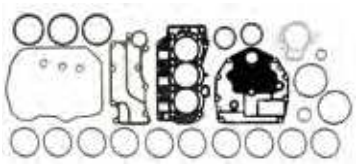

Kit juntas de motor
Power head gasket kit
Kit guarnizione motore

Nº	Ref.	R.O. OEM	Descripción	Description	Descrizione	Cantidad Quanty Quantità
1	**REC67C-W0001-01**	27-825231A99	KIT JUNTAS	POWER HEAD GASKET KIT	KIT GUARNIZIONI	1
2	**PAF15-04000003**		JUNTA	GASKET	GUARNIZIONE	1
3	**REC67C-11351-00**	27-825231	JUNTA BASE MOTOR	GASKET, CYLINDER	GUARNIZIONE BASE MOTORE	1
4	**PAF4-04000011**	27-824853	JUNTA TERMOSTATO	GASKET, COVER	GUARNIZIONE TERMOSTATO	1
5	**REC67C-41114-00**	27-8347751	JUNTA	GASKET, EXHAUST COVER	GUARNIZIONE	1
6	**PAF25-05020003**	26-825027	RETÉN	OIL SEAL	PARAOLIO	1
7	**PAF25-05020002**	26-832013	RETÉN	OIL SEAL	PARAOLIO	1
8	**PAF25-05010111**	27-827610	JUNTA	GASKET	GUARNIZIONE	4
9	**REC67C-11181-01**	27-834777	JUNTA CULATA	GASKET, CYLINDER HEAD	GUARNIZIONE TESTATA	1
10	**REC67C-11356-00**	25-854341	JUNTA	SEAL, CYLINDER	GUARNIZIONE	1
11	**PAJASOF40431-025**		TÓRICA	O-RING	O-RING	2
12		25-825057	TÓRICA	O-RING	O-RING	9
13		25-856525	TÓRICA	O-RING	O-RING	3
14			TÓRICA	O-RING	O-RING	3
15	**PAF25-05050021**	26-825048	RETÉN	OIL SEAL	PARAOLIO	1
16	**PAF25-05000024**	28-91800	CHAVETA	KEY, WOODRUFF	CHIAVETTA	1
17	**PAF25-05050015**	25-826152	TÓRICA	O-RING	O-RING	1
18	**PAF25-05050013**	25-826154	TÓRICA	O-RING	O-RING	1
19	**PAF25-05050014**	25-826153	TÓRICA	O-RING	O-RING	1
20	**REC825212T02**	825212	TERMOSTATO	THERMOSTAT	TERMOSTATO	1
21	**PAF15-07010021**	8250311	TAPA TERMOSTATO	THERMOSTAT CUP	COPERCHIO TERMOSTATO	1

4 HP / 5 HP

NEW

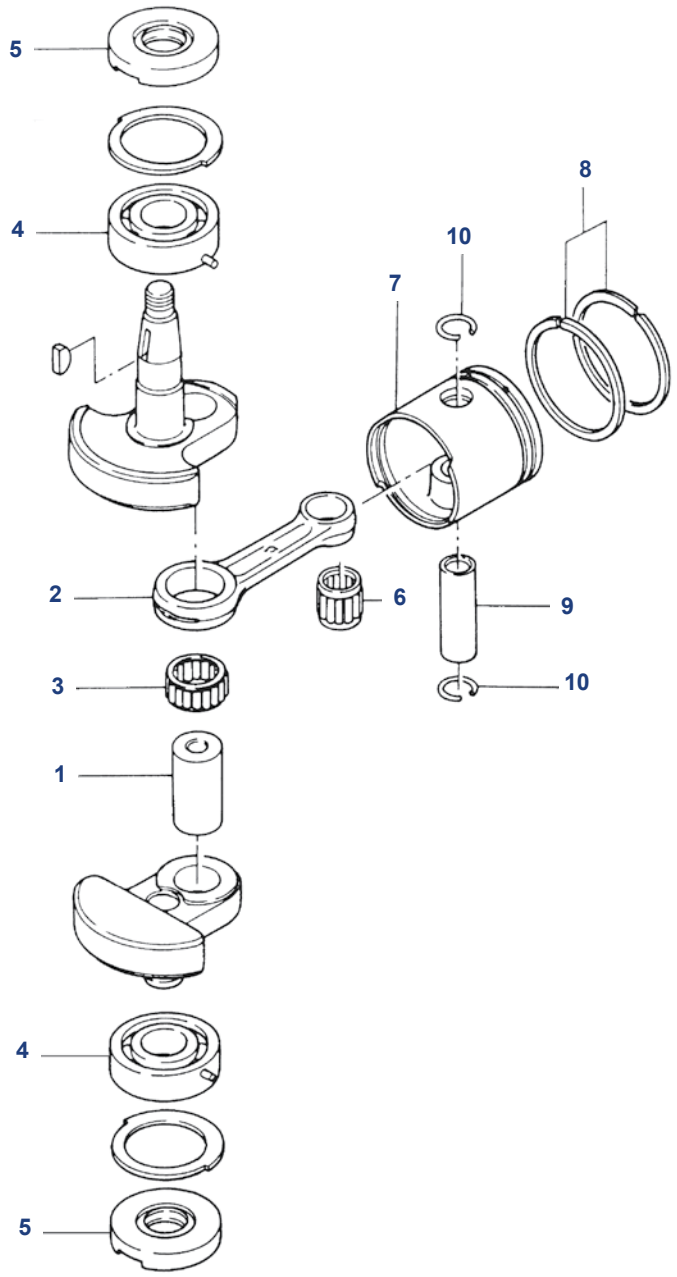

Nº	Ref.	R.O. OEM	Descripción	Description	Descrizione	Cantidad Quanty Quantità
1	**REC813046002**	813046002	PIN	CRANK PIN	SPINOTTO	1
2		629-813047	BIELA	CONNECTING ROD	BIELLA	1
3	**REC31-813048**	31-813048	COJINETE DE AGUJA	NEEDLE BEARING	CUSCINETTO	1
4	**REC30-16049**	30-16049	RODAMIENTO	BALL BEARING	CUSCINETTO	2
5	**REC26-16051**	26-16051	RETÉN ACEITE	OIL SEAL	PARAOLIO	2
6	**REC31-16052**	31-16052	COJINETE DE AGUJA	NEEDLE BEARING	CUSCINETTO	1
7	**REC779-9615T**	779-9615T	PISTÓN STD	PISTON STD	PISTONE STD	1
8	**REC8M0080357**	8M0080357	AROS	PISTON RING	FASCE	2
9	**REC41-16056**	41-16056	PIN	PISTON PIN	SPINOTTO	1
10	**REC53-16057**	53-16057	CLIP	CLIP	CLIP	2

MARINER 4A
(6E0-001011+ (M), (6E0-300101+ (ML)

2 TIEMPOS STROKES

NEW

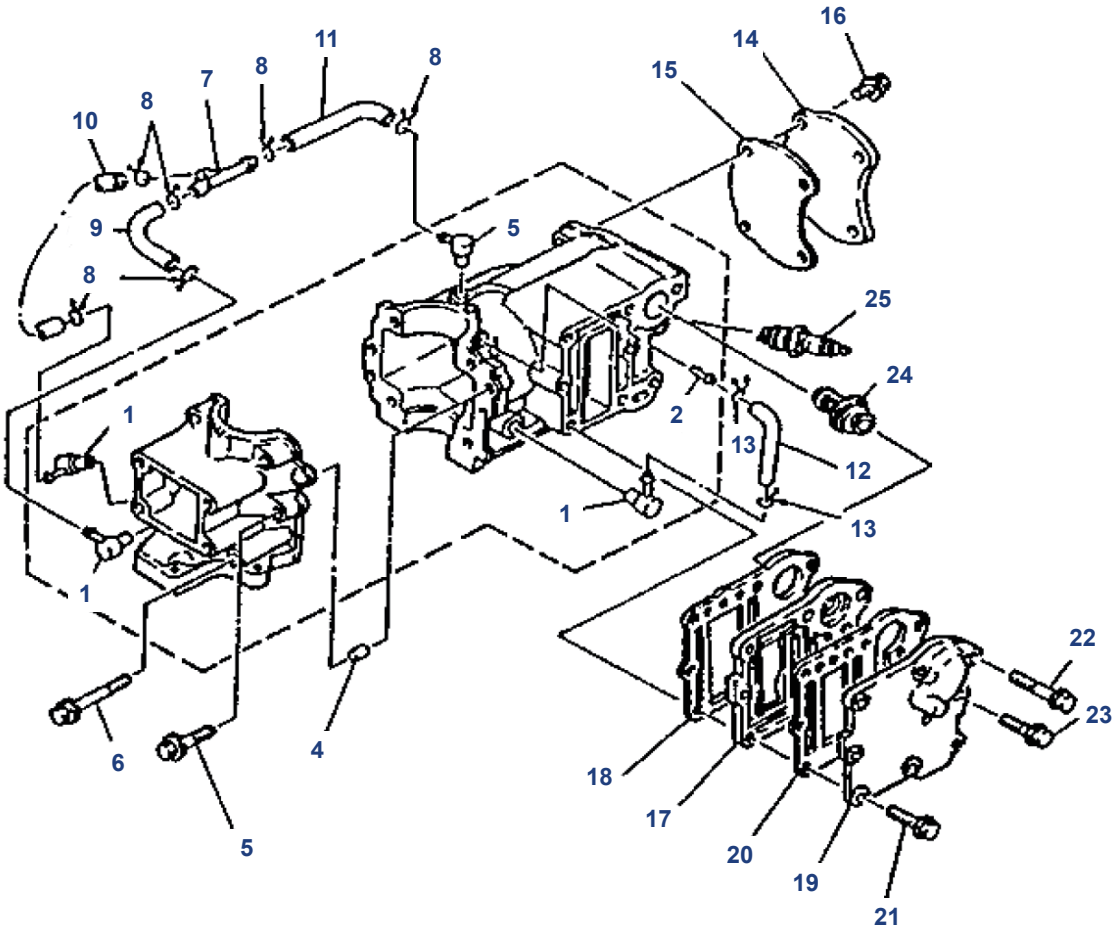

Nº	Ref.	R.O. OEM	Descripción	Description	Descrizione	Cantidad Quanty Quantità
1	**REC650-11370-00**	21-80727M	VÁLVULA	CHECK VALVE ASSY	VALVOLA	3
2		22-80122M	JUNTA	PIPE, JOINT	GUARNIZIONE	1
3		22-99988M	RACORD TUBO	NIPPLE, HOSE	RACCORDO TUBO	1
4	**PAF15-00000006**	18842M	PIN CENTRADOR	PIN, DOWEL	SPINOTTO CENTRAGGIO	2
5		10-91681M	TORNILLO	BOLT, FLANGE	VITE	4
6		10-91710M	TORNILLO	BOLT, FLANGE	VITE	2
7		22-99989M	JUNTA	PIPE, JOINT 4	GUARNIZIONE	1
8		27-99991M	CLIP ABRAZADERA	CLIP	CLIP FASCETTA	5
9		32-83088M	TUBO	HOSE (L100)	TUBO	1
10		32-91709M	TUBO	HOSE (L70)	TUBO	1
11		32-99990M	TUBO	HOSE (L120)	TUBO	1
12		32-91709M	TUBO	HOSE (L70)	TUBO	1
13		54-82046M	CLIP ABRAZADERA	CLIP	CLIP FASCETTA	2
14		99992M	TAPA	COVER, CYLINDER HEAD	COPERCHIO	1
15	**REC6E0-11193-A1**	27-99991M	JUNTA TAPA	GASKET, HEAD COVER	GUARNIZIONE TAPPO	1
16		10-91686M	TORNILLO	BOLT, FLANGE	VITE	4
17		99994M	PLACA	INNER COVER, EXHAUST	PIASTRA	1
18	**REC6E0-41112-A1**	27-99995M	JUNTA ESCAPE	GASKET, EXHA COVER	GUARNIZIONE SCARICO	1
19		11920M	TAPA ESCAPE	OUTER COVER, EXHAUST	COPERCHIO SCARICO	1
20	**REC6E0-41114-A1**	27-99993M	JUNTA ESCAPE	GASKET, EX COVER	GUARNIZIONE SCARICO	1
21		10-11945M	TORNILLO	BOLT, FLANGE	VITE	7
22		10-91666M	TORNILLO	BOLT, FLANGE	VITE	1
23		10-91681M	TORNILLO	BOLT, FLANGE	VITE	1
24	**REC6E5-12411-02**	83282M	TERMOSTATO	THERMOSTAT	TERMOSTATO	1
25	**NGKBR7HS**	33-53098	BUJÍA	SPARKPLUG	CANDELA	1

MARINER 4A
(6E0-001011+ (M), (6E0-300101+ (ML)

2 TIEMPOS STROKES

NEW

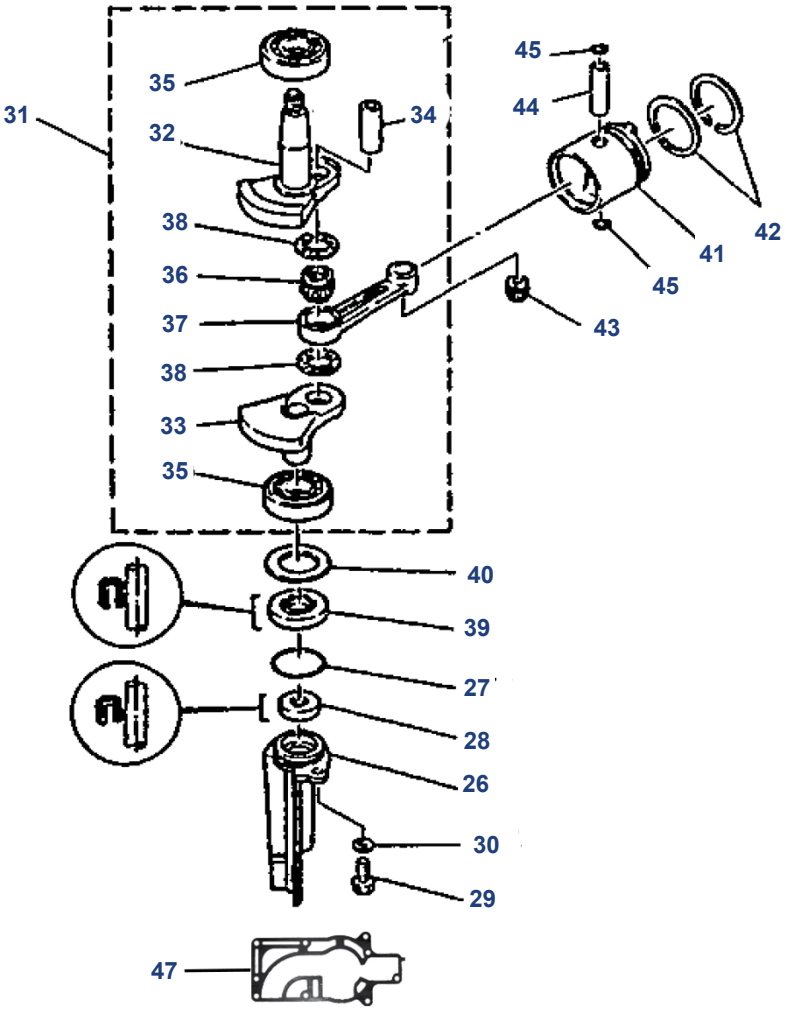

Nº	Ref.	R.O. OEM	Descripción	Description	Descrizione	Cantidad Quanty Quantità
26		814455M	CUERPO RETÉN	HOUSING, OIL SEAL	GUARNIZIONE CORPO	1
27		25-91727M	ARO TÓRICO	O-RING	O-RING	1
28	**REC93101-10M25**	26-95472M	RETÉN	OIL SEAL	PARAOLIO	1
29		10-91725	TORNILLO	BOLT	VITE	1
30		12-82214M	ARANDELA	WASHER	RONDELLA	1
31		463-8255M	CIGÜEÑAL COMPLETO	CRANKSHAFT	ALBERO MOTORE COMPLETO	1
32			PARTE 1 CIGÜEÑAL	CRANK 1	ALBERO MOTORE PARTE 1	1
33			PARTE 2 CIGÜEÑAL	CRANK 2	ALBERO MOTORE PARTE 2	1
34	**REC6G1-11681-00**		PASADOR	PIN, CRANK 1	SPINOTTO	1
35	**REC93306-204U0**	30-18859M	RODAMIENTO	BEARNIG	CUSCINETTO	2
36	**REC93310-418V1**		RODAMIENTO	BEARING	CUSCINETTO	1
37	**REC6E0-11651-01**		BIELA	ROD, CONNECTING	BIELLA	1
38	**REC90209-18112**		ARANDELA	WASHER	RONDELLA	2
39	**REC93101-20M29**	26-18843M	RETÉN	OIL SEAL	PARAOLIO	1
40		12-91723M	ARANDELA	WASHER, PLATE	RONDELLA	1
41	**REC6E0-11631-00-98K**	761-8256M	PISTÓN	PISTON (STD)	PISTONE	1
42	**REC6G1-11610-00**	39-11462M	SEGMENTOS PISTÓN	PISTON RING (STD)	FASCE PISTONE	1
	REC6J1-11610-00	39-14197M	SEGMENTOS PISTÓN	PISTON RING (STD) (5C ENGINES)	FASCE PISTONE	1
43	**REC93310-112V0**	31-91721M	RODAMIENTO	BEARING	CUSCINETTO	1
44	**REC6G1-11633-00**	41-95601M	BULÓN	PIN, PISTÓN	SPINOTTO	1
45	**REC93450-13022**	53-82342M	CIERRE	CIRCLIP	CLIP CHIUSURA	2
47	**REC6E0-45113-A1**	27-91780	JUNTA BASE	GASKET, UPPER CASING	GUARNIZIONE BASE	1

6HP / 8HP / 9.8HP (2CYL- INTERNATIONAL)

NEW

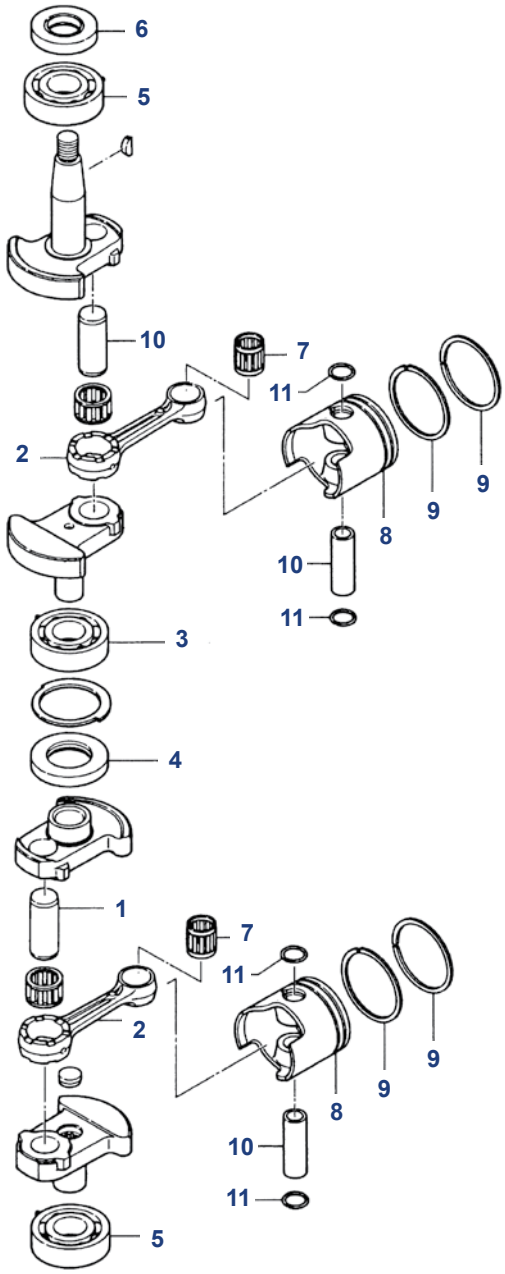

Nº	Ref.	R.O. OEM	Descripción	Description	Descrizione	Cantidad Quanty Quantità
1		803671	PIN	CRANK PIN	SPINOTTO	2
2	**REC629-8036741**	629-8036741	BIELA	CONNECTING ROD	BIELLA	2
3	**REC30-16049**	30-16049	RODAMIENTO	BALL BEARING	CUSCINETTO	1
4	**REC26-85370711**	26-85370711	RETÉN ACEITE	OIL SEAL	PARALIO	1
5	**REC30-16049**	30-16049	RODAMIENTO	BALL BEARING	CUSCINETTO	2
6	**REC26-803514**	25-803514	RETÉN ACEITE	OIL SEAL	PARALIO	1
7	**REC31-8036752**	31-8036752	COJINETE DE AGUJA	NEEDLE BEARING	CUSCINETTO	2
8	**REC779-804886**	779-804886	PISTÓN STD	PISTON STD	PISTONE STD	2
9	**REC39-803678A3**	39-803678A3	AROS STD	PISTON RING STD	O-RING STD	4
10	**REC41-8036801**	41-8036801	PIN	PISTON PIN	SPINOTTO	2
11	**REC53-16057**	53-16057	CLIP	CLIP	CLIP	2

2 TIEMPOS STROKES

MARINER 6C/D, 8C

NEW

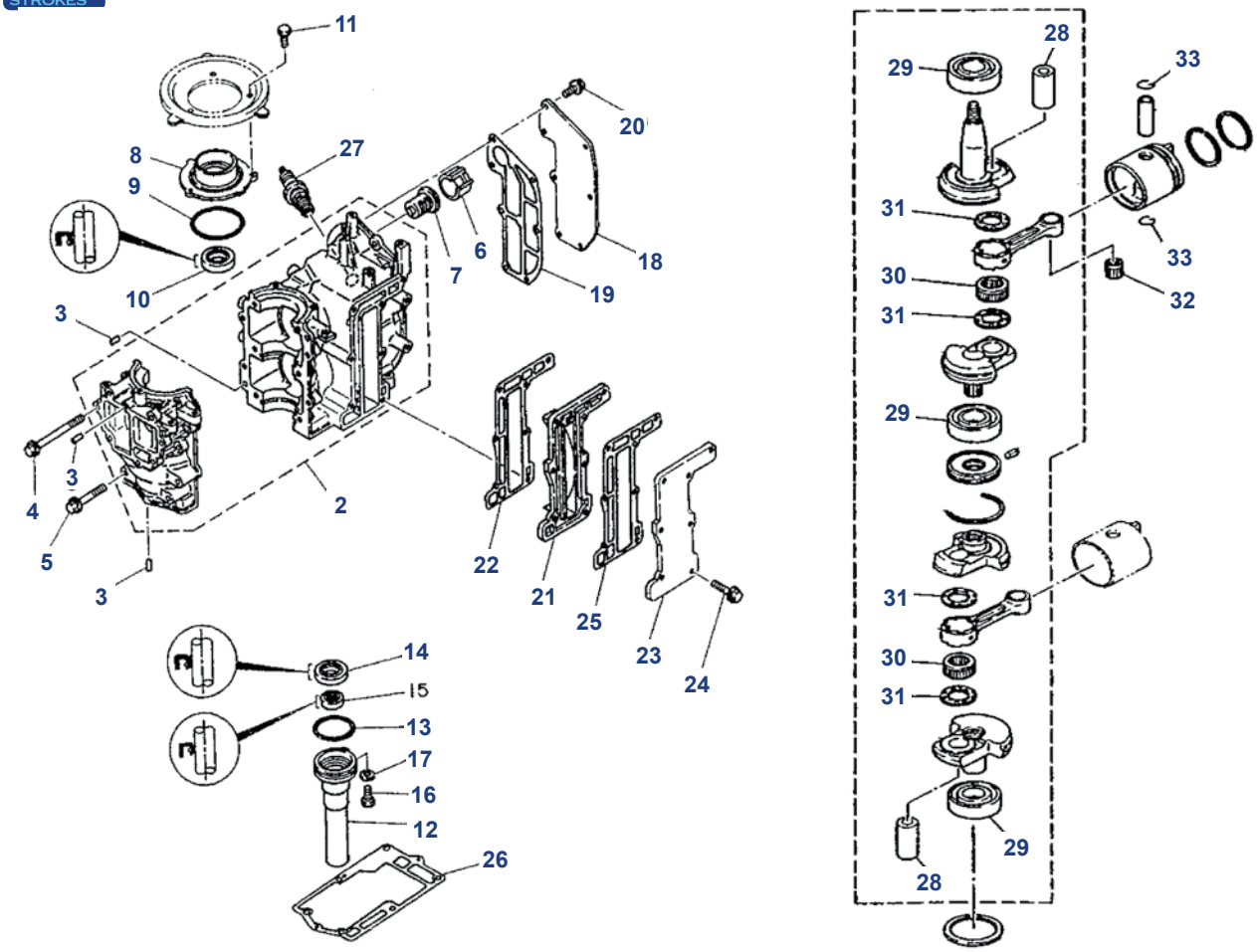

Nº	Ref.	R.O. OEM	Descripción	Description	Descrizione	Cantidad Quanty Quantità
3		17-82354M	PIN CENTRADOR	PIN, DOWEL	SPINOTTO CENTRAGGIO	4
4		10-11448M	TORNILLO	BOLT, FLANGE	VITE	6
5		10-11449M	TORNILLO	BOLT, FLANGE	VITE	4
6		11452M	CASQUILLO	COLLAR	COPERCHIO	1
7	**REC6E5-12411-02**	11919M	TERMOSTATO	THERMOSTAT	TERMOSTATO	1
8		14201M	CUERPO RETÉN	HOUSING, OIL SEAL	CORPO GUARNIZIONE	1
9	**REC93210-54M54**	25-11451M	ARO TÓRICO	O-RING	O-RING	1
10	**REC93102-20M25**	26-14195M	RETÉN	OIL SEAL	PARAOLIO	1
11		10-84247M	TORNILLO	BOLT	VITE	3
12		11463M	CUERPO RETÉN	HOUSING, OIL SEAL	CORPO GUARNIZIONE	1
13	**REC93210-42159**	26-94663M	ARO TÓRICO	O-RING	O-RING	1
14	**REC93101-20M34**	23-81841M	RETÉN	OIL SEAL	PARAOLIO	1
16		10-91725M	TORNILLO	BOLT	VITE	1
17		12-82214M	ARANDELA	WASHER	RONDELLA	1
18		11453M	TAPA	COVER CYLINDER HEAD	COPERCHIO	1
19	**REC6G1-11193-A1**	27-11454M	JUNTA TAPA TERMOSTATO	GASKET THERMOSTAT COVER	GUARN. COPERCHIO TERMOSTATO	1
20		10-91686M	TORNILLO	BOLT, FLANGE	VITE	7
21		11455M	PLACA	INNER COVER, EXHAUST	PIASTRA	1
22	**REC6G1-41112-A1**	27-11456M	JUNTA ESCAPE	GASKET, EXHAUST INNER COVER	GUARNIZIONE SCARICO	1
23		11457M	TAPA	OUTER COVER, EXHAUST	COPERCHIO	1
24		10-11945M	TORNILLO	BOLT, FLANGE	VITE	7
25	**REC6G1-41114-A0**	27-11456M	JUNTA ESCAPE	GASKET, EXHAUST OUTER COVER	GUARNIZIONE SCARICO	1
26	**REC6G1-45113-A1**	27-11560M	JUNTA BASE	GASKET, UPPER CASING	GUARNIZIONE BASE	1
27	**NGKBR7HS-10**	33-41263M	BUJÍA	PLUG, SPARK (NGK BR7HS-10)	CANDELA	2
27	**NGKBR6HS-10**	33-11458M	BUJÍA	PLUG, SPARK (NGK BR6HS-10) (6C ENGINES)	CANDELA	2
28	**REC6G1-11681-00**		BULÓN	PIN, CRANK 1	SPINOTO	2
29	**REC93306-204U0**	30-82299M	RODAMIENTO	BEARING	CUSCINETTO	3
30	**REC93310-418V1**		RODAMIENTO	BEARING	CUSCINETTO	2
31	**REC90209-18112**		ARANDELA	WASHER	RONDELLA	4
32	**REC93310-112V0**	31-91721M	RODAMIENTO	BEARING	CUSCINETTO	2
33	**REC93450-13022**	53-82342M	CLIP	CIRCLIP	CLIP CHIUSURA	4

2 STROKES TIEMPOS

8K (K-LONG / K-SHORT)
W8 (W/MARATHON

NEW

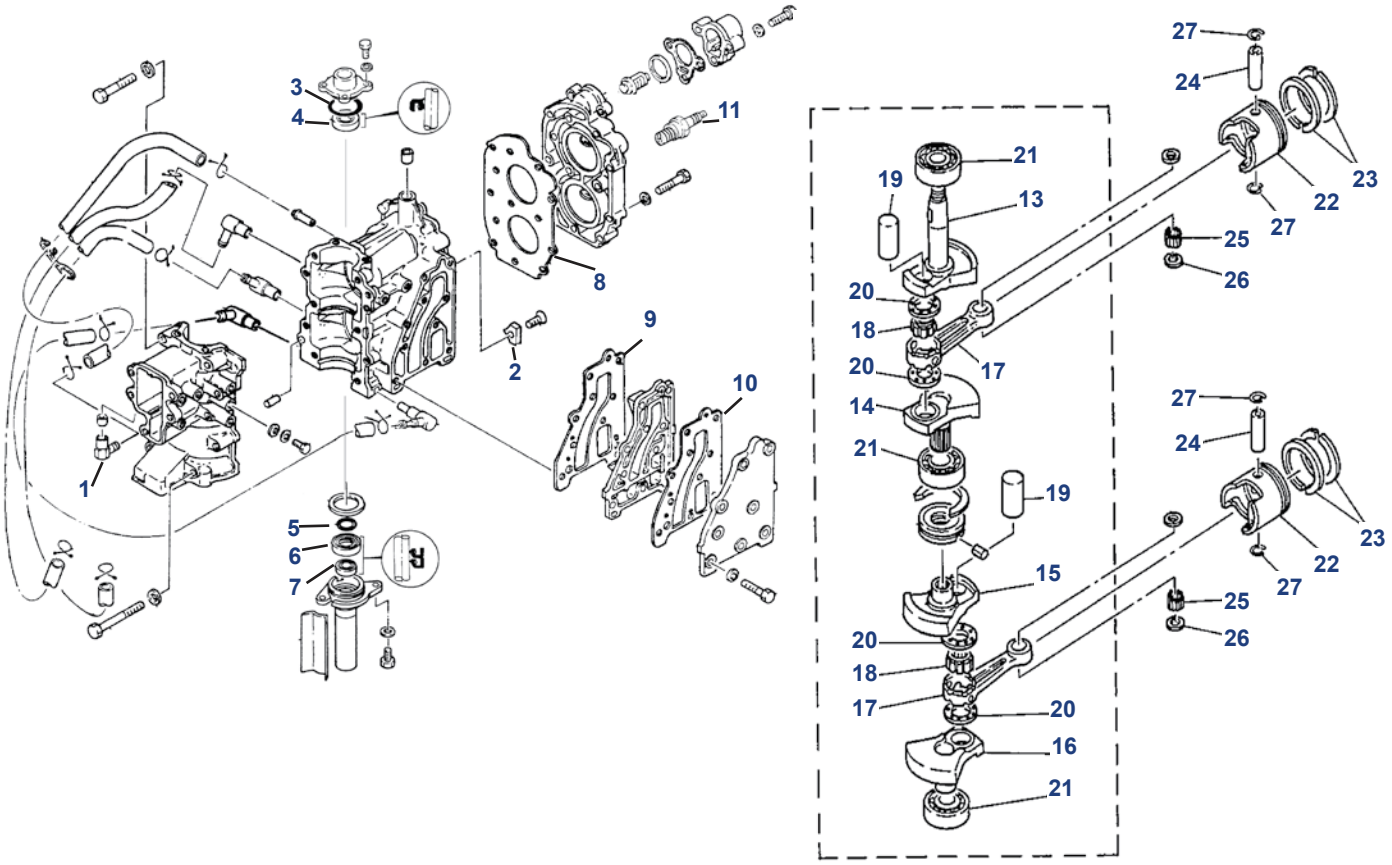

Nº	Ref.	R.O. OEM	Descripción	Description	Descrizione	Cantidad Quanty Quantità
1	**REC650-11370-00**	21-80727M	VÁLVULA DE CONTROL COMPL.	CHECK VALVE ASSY	VALVOLA DI CONTROLLO COMPL.	1
2	**TEN01121**	84732M	ÁNODO	ANODE	ANODO	1
3	**REC93210-42159**	25-82276M	ANILLO	O-RING	O-RING	1
4	**REC93102-20M25**	26-14195M	RETÉN ACEITE	OIL SEAL	PARAOLIO	1
5	**REC93210-42M70**	25-95602M	ANILLO	O RING	O-RING	1
6	**REC93101-20M29**	26-18843M	RETÉN ACEITE	OIL SEAL	PARAOLIO	1
7	**REC93101-14M01**	26-82165M	RETÉN ACEITE	OIL SEAL	PARAOLIO	1
8	**REC677-11181-A0**	27-95595M	JUNTA DE CULATA 1	GASKET, CYLINDER HEAD	GUARNIZIONE TESTATA 1	1
9	**REC677-41112-A0**	27-95597M	JUNTA	GASKET, EXHAUST INNER COVER	COPERCHIO	1
10	**REC677-41112-A0**	27-95597M	JUNTA	GASKET, EXHAUST OUTER COVER	COPERCHIO	1
11	**NGKB7HS-10**	33-82370M	BUJÍA (NGK B7HS-10)	PLUG, SPARK (NGK B7HS-10)	CANDELA (NGK B7HS-10)	2
12		463-9327M	CIGÜEÑAL COMPLETO	CRANKSHAFT COMPLETE	ALBERO MOTORE COMPLETO	1
13	**REC677-11412-02**		CIGÜEÑAL 1	CRANK 1	LEVA 1	1
14	**REC677-11422-02**		CIGÜEÑAL 2	CRANK 2	LEVA 2	1
15	**REC677-11432-02**		CIGÜEÑAL 3	CRANK 3	LEVA 3	1
16	**REC677-11442-02**		CIGÜEÑAL 4	CRANK 4	LEVA 4	1
17	**REC6E0-11651-01**	629-9492M	BIELA	ROD, CONNECTING	BIELLA	2
18	**REC93310-418U0**	31-94769M	RODAMIENTO	BEARING	GABBIA A RULLI	2
19	**REC6G1-11681-00**	17-14193M	PIN	PIN	SPINOTTO	2
20	**REC90209-18112**	12-84620M	ARANDELA	WASHER	RONDELLA	4
21	**REC93306-204U0**	30-18859M	RODAMIENTO	BEARING	CUSCINETTO	3
22	**REC677-11631-00K**	761-8224M	PISTÓN (STD)	PISTON (STD)	PISTONE (STD)	2
	REC677-11635-00K	761-8225M	PISTÓN (0.25mm O/S)	PISTON (0.25mm O/S)	PISTONE (0.25mm O/S)	2
	REC677-11636-00K	761-8226M	PISTÓN (0.50mm O/S)	PISTON (0.50mm O/S)	PISTONE (0.50mm O/S)	2
23	**REC647-11610-00**	39-80422M	KIT AROS PISTÓN (STD)	PISTON RING SET (STD)	KIT FASCE (STD)	2
	REC647-11610-10	39-80423M	KIT AROS PISTÓN (0.25mm O/S)	PISTON RING SET (0.25mm O/S)	KIT FASCE (0.25mm O/S)	2
	REC647-11610-20	39-80424M	KIT AROS PISTON (0.50mm O/S)	PISTON RING SET (0.50mm O/S)	KIT FASCE (0.50mm O/S)	2
24	**REC6G1-11633-00**	41-95601M	PIN, PISTON	PIN, PISTON	SPINOTTO, PISTONE	2
25	**REC93602-14118**	29-82350M	RODAMIENTOS	BEARING	CUSCINETTO	56
26	**REC90201-12565**	12-81816M	ARANDELA	WASHER, PLATE	RONDELLA PIANA	4
27	**REC93450-13022**	53-82342M	CIRCLIP	CIRCLIP	CLIP CHIUSURA	4

2 TIEMPOS STROKES

9.9 HP / 15 HP / 18 HP (2CYL - INTER.)

NEW

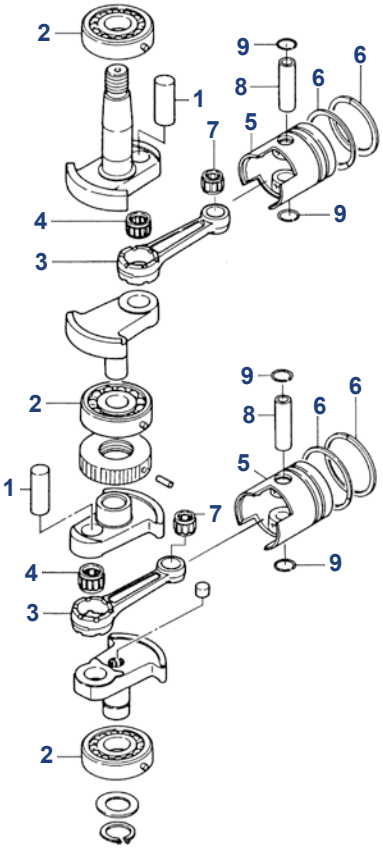

Nº	Ref.	R.O. OEM	Descripción	Description	Descrizione	Cantidad Quanty Quantità
1	**REC803673**	803673	PIN	CRANK PIN	SPINOTTO	2
2	**REC30-160494**	30-160494	RODAMIENTO	BALL BEARING	CUSCINETTO	3
3	**REC629-803674**	629-803674	BIELA	CONNECTING ROD	BIELLA	2
4		31-803675	COJINETE DE AGUJA	NEEDLE BEARING	CUSCINETTO	2
5	**REC779-803677**	779-803677	PISTÓN STD, 18 HP	PISTON STD	PISTONE STD	2
	REC779-803677T02	779-803677T02	PISTÓN STD, 9.9 / 15 HP	PISTON STD	PISTONE STD	2
6	**REC39-803678A1**	39-803678A1	AROS, 18 HP	PISTON RING	FASCE	2
	REC8M0080357	8M0080357	AROS, 9.9 / 15 HP	PISTON RING	FASCE	2
7	**REC31-16052**	31-16052	COJINETE DE AGUJA	NEEDLE BEARING	CUSCINETTO	1
8	**REC41-803680002 18 HP**	41-803680002	PIN	PISTON PIN	SPINOTTO	2
	REC41-825713002 9.9 / 15 HP	41-825713002	PIN	PISTON PIN	SPINOTTO	2
9	**REC53-16057**	REC53-16057	CLIP	CLIP	CLIP	4

2 TIEMPOS STROKES

25 HP / 30 HP (2CYL - INTER.)

NEW

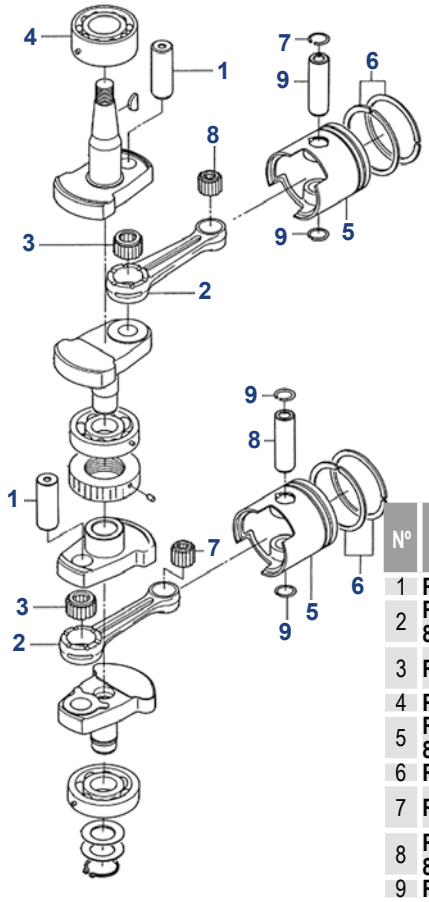

Nº	Ref.	R.O. OEM	Descripción	Description	Descrizione	Cantidad Quanty Quantità
1	**REC8130461**	8130461	PIN	CRANK PIN	SPINOTTO	2
2	**REC629-813047T01**	629-813047T01	BIELA	CONNECTING ROD	BIELLA	2
3	**REC31-8130482**	31-8130482	COJINETE DE AGUJA	NEEDLE BEARING	CUSCINETTO	2
4	**REC30-16049T01**	30-16049T01	RODAMIENTO	BALL BEARING	CUSCINETTO	1
5	**REC779-879194T01**	779-879194T01	PISTÓN STD	PISTON STD	PISTONE STD	2
6	**REC39-16054A5**	39-16054A5	AROS	PISTON RING	FASCE	4
7	**REC345-00042-0**	345-00042-0	COJINETE DE AGUJA	NEEDLE BEARING	CUSCINETTO	1
8	**REC41-803680003**	41-803680003	PIN	PISTON PIN	SPINOTTO	2
9	**REC53-16057**	53-16057	CLIP	CLIP	CLIP	4

40K W40(W/MARATHON)

NEW

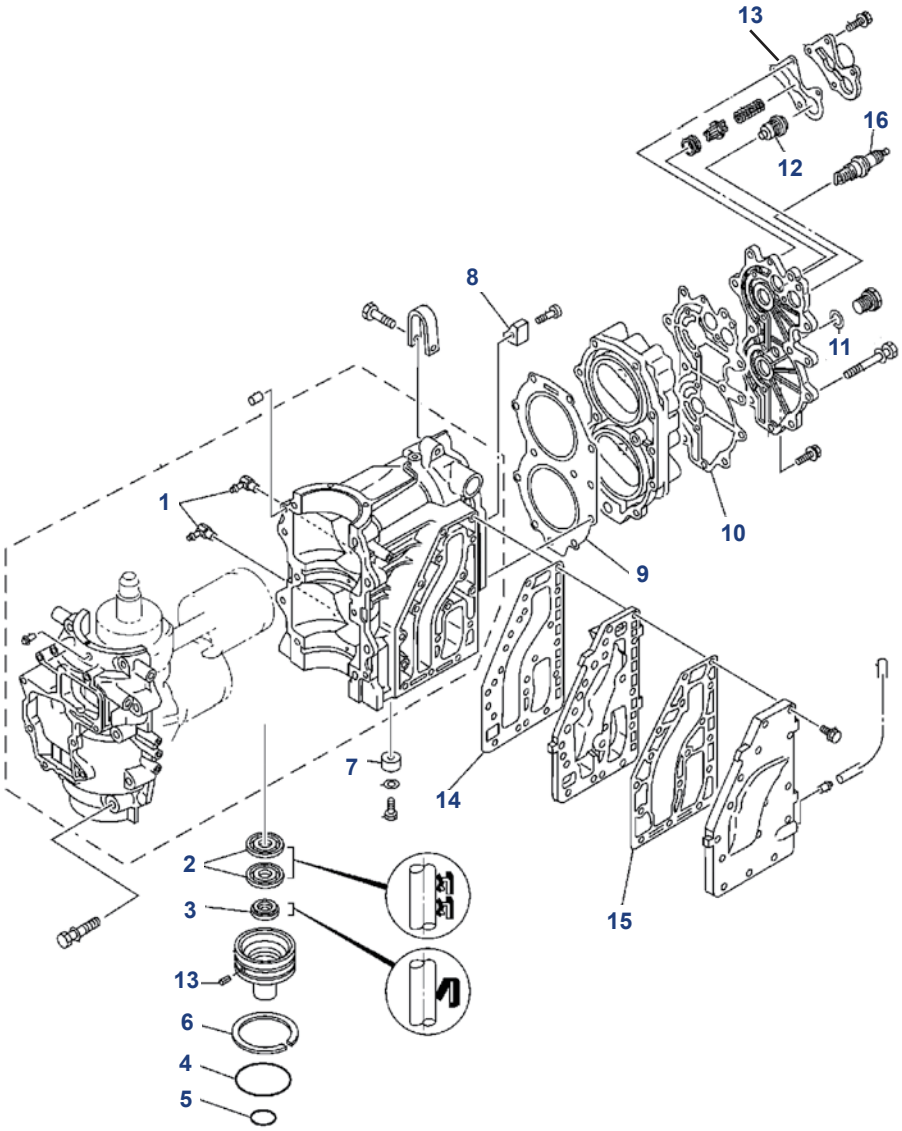

Nº	Ref.	R.O. OEM	Descripción	Description	Descrizione	Cantidad Quanty Quantità
1	**REC650-11370-00**	21-80727M	VÁLVULA CONTROL COMPL.	CONTROL VALVE	VALVOLA DI CONTROLLO COMPL.	2
2	**REC93101-30M33**	26-11758M	RETÉN	OIL SEAL	PARAOLIO	2
3	**REC93104-16M01**	26-189721	RETÉN	OIL SEAL	PARAOLIO	1
4	**REC93210-65M50**	25-11759M	TÓRICA	O-RING	O-RING	1
5	**REC93210-22M02**	25-83348M	TÓRICA	O-RING	O-RING	1
6	**REC93440-68M03**	53-11760M	CIERRE	CIRCLIP	CLIP CHIUSURA	1
7	**TEN01127**	83394M	ÁNODO	ANODE	ANODO	1
8	**TEN01166**	83330M	ÁNODO	ANODE	ANODO	1
9	**REC6F5-11181-A2**	27-11745M	JUNTA DE CULATA 1	HEAD CYLINDER GASKET 1	GUARNIZIONE TESTATA 1	1
10	**REC6F6-11193-A1**	27-11749M	JUNTA CULATÍN	GASKET	GUARNIZIONE	1
11	**PAF15-04000003**	27-11754M	JUNTA	GASKET	GUARNIZIONE	1
12	**REC6F5-12411-03**	814554T01	TERMOSTATO	THERMOSTAT	TERMOSTATO	1
13	**REC6E9-12414-A1**	27-97706M	JUNTA TERMOSTATO	THERMOSTAT GASKET	GUARNIZIONE TERMOSTATO	1
14	**REC6F5-41112-A0**	27-11754	JUNTA ESCAPE	GASKET	GUARNIZIONE SCARICO	1
15	**REC6F5-41114-A0**	27-11756	JUNTA ESCAPE	GASKET	GUARNIZIONE SCARICO	1
16	**NGKB7HS**	33-82371M	BUJÍA	SPARKPLUG	CANDELA	2

2 TIEMPOS STROKES

40K W40(W/MARATHON)

NEW

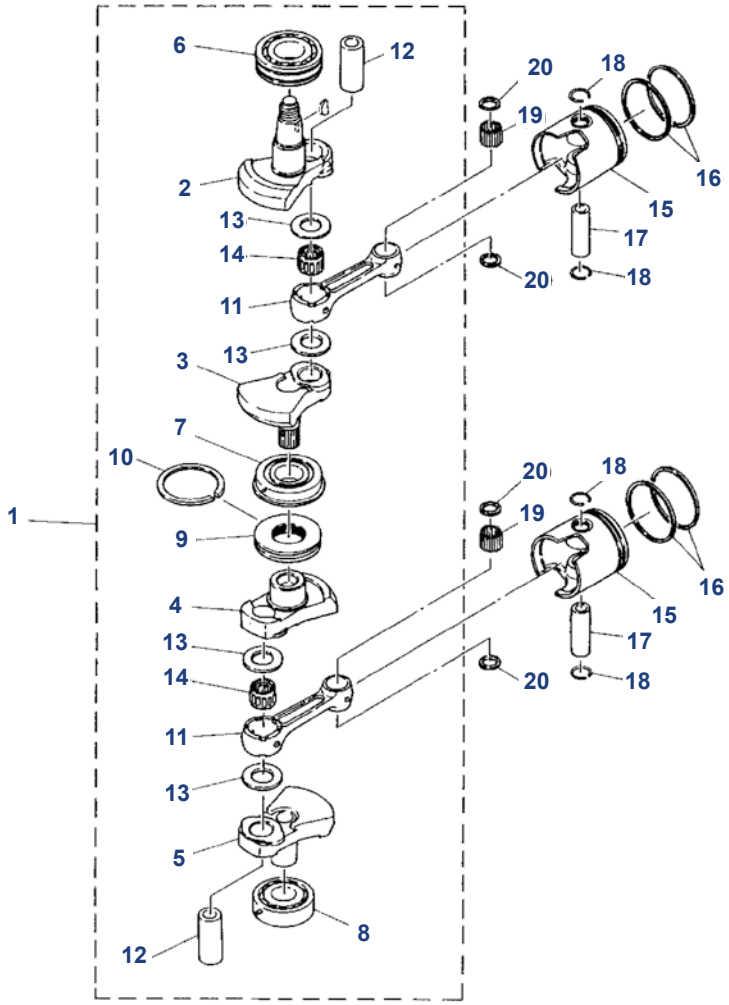

Nº	Ref.	R.O. OEM	Descripción	Description	Descrizione	Cantidad Quanty Quantità
1		463-9327M	CIGÜEÑAL COMPLETO	CRANKSHAFT COMPLETE	ALBERO MOTORE COMPLETO	1
2	**REC6F5-11412-11**	851997M	PARTE 1 CIGÜEÑAL	CRANK 1	PARTE 1 ALBERO MOTORE	1
3	**REC6F5-11422-11**	827142M	PARTE 2 CIGÜEÑAL	CRANK 2	PARTE 2 ALBERO MOTORE	1
4	**REC6F5-11432-11**	827143M	PARTE 3 CIGÜEÑAL	CRANK 3	PARTE 3 ALBERO MOTORE	1
5	**REC6F5-11442-11**	827144M	PARTE 4 CIGÜEÑAL	CRANK 4	PARTE 4 ALBERO MOTORE	1
6	**REC93306-307U0**	30-11766T	COJINETE	BEARING	CUSCINETTO	1
7	**REC93332-000UE**	31-13300T	COJINETE	BEARING	CUSCINETTO	1
8	**REC93306-306V1**	30-11767T	COJINETE	BEARING	CUSCINETTO	1
9	**REC6F5-11515-00**	13301M	RETÉN LABERINTO 1	LABERINTH SEAL 1	GUARNIZIONE SIGILLATA 1	1
10	**REC93440-68M03**	53-11760M	CIERRE	CERCLIP	CLIP CHIUSURA	1
11	**REC6F5-11651-00**	629-9486T	BIELA	CRANK	BIELLA	2
12	**REC6F5-11681-00**	17-13302T	PIN	PISTON PIN	SPINOTTO LEVA 1	2
13	**REC90209-27M07**	12-13305M	ARANDELA DE SEPARACIÓN	WASHER	RONDELLA DISTANZIALE	14
14	**REC93310-727V7**	29-13304M	COJINETE	BEARING	GABBIA A RULLI	2
15	**REC6F6-11631-00K**	761-9329T	PISTÓN (STD	PISTON STD	PISTONE (STD)	2
		761-9330M	PISTÓN (0.25mm O/S)	PISTON	PISTONE (0.25mm O/S)	2
	REC6F6-11636-00K	761-9331T	PISTÓN (0.50mm O/S)	PISTON	PISTONE (0.50mm O/S)	2
16	**REC6F5-11610-00**	39-11768T	JUEGO DE AROS (STD)	RING SET STD	SET FASCE (STD)	2
	REC6F5-11610-10	39-11769M	JUEGO DE AROS (0.25mm O/S)	RING SET	SET FASCE (0.25mm O/S)	2
	REC6F5-11610-20	39-11770T	JUEGO DE AROS (0.50mm O/S)	RING SET	SET FASCE (0.50mm O/S)	2
17	**REC6F5-11633-00**	41-11771T	PASADOR, PISTÓN	PISTON PIN	SPINOTTO, PISTONE	2
18	**REC663-11634-00**	53-81264M	PRESILLA, BULÓN DE PISTÓN	CLIP PISTON PIN	CLIP SPINOTTO PISTONE	4
19	**REC93603-21111**	29-82353M	COJINETE	PIN ROLLER BEARING	PERNO PASSANTE	56
20	**REC90201-20417**	12-81831M	ARANDELA PLANA	FLAT WASHER	RONDELLA PIANA	4

40HP LIGHTNING / XR / MXL MARATHON (INTER.) 50HP MH

2 TIEMPOS STROKES — NEW

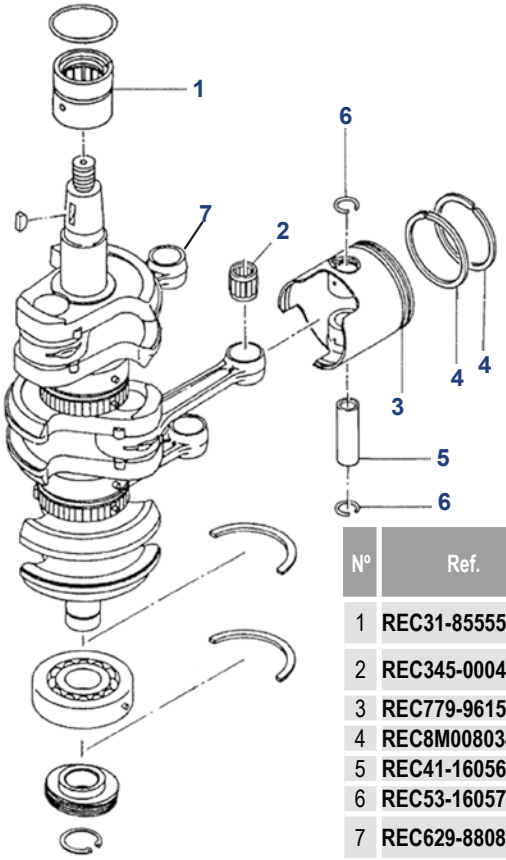

Nº	Ref.	R.O. OEM	Descripción	Description	Descrizione	Cantidad Quanty Quantità
1	**REC31-855553**	31-855553	RODAMIENTO SUP.	MAIN BEARING UPPER	CUSCINETTO SUPERIORE	1
2	**REC345-00042-0**	345-00042-0	COJINETE DE AGUJA	NEEDLE BEARING	CUSCINETTO	3
3	**REC779-96152**	779-96152	PISTÓN STD	PISTON STD	PISTONE STD	3
4	**REC8M0080349**	8M0080349	AROS	PISTON RING	FASCE	3
5	**REC41-16056**	41-80368003	PIN	PISTON PIN	SPINOTTO	3
6	**REC53-16057**	53-16057	CLIP	CLIP	CLIP	6
7	**REC629-880855**	629-880855	BIELA	CONNECTING ROD	BIELLA	3

50/60 JET 40/45 (3 CYL) 40 JET (OP094500+), 45 JET (9973100-OP094499), 55HP (3CYL) (9973100+), 60HP (3 CYL) (9973100+), 60HP (3 CYL) BIGFOOT (9973100-OP325499)

2 TIEMPOS STROKES — NEW

Ref.	R.O.
REC27-812867A97	27-812867A97

Kit juntas
Gasket kit
Kit guarnizione

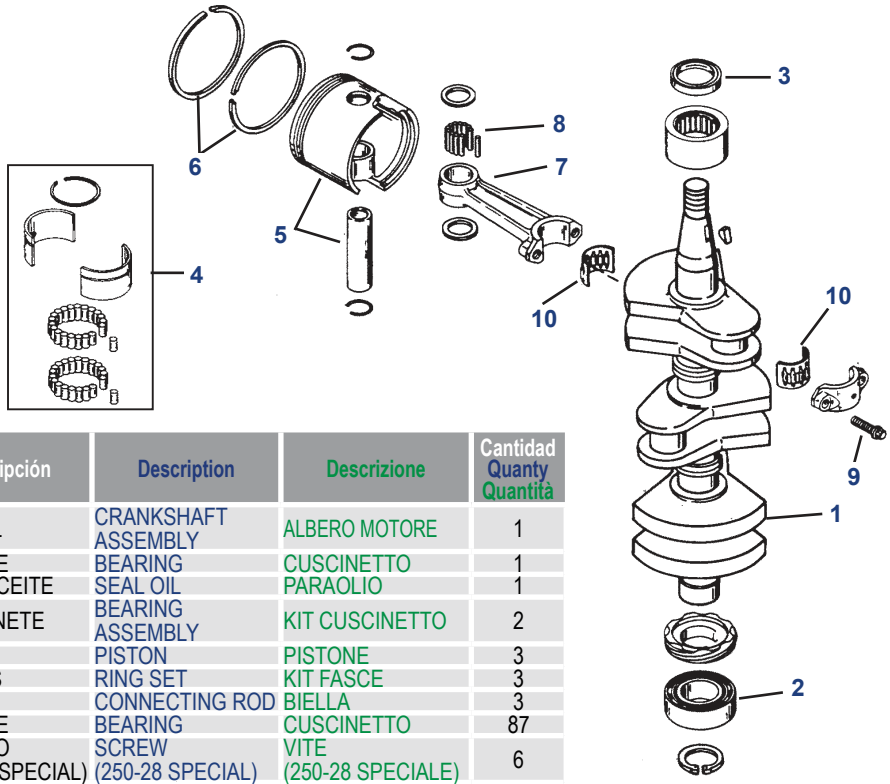

Nº	Ref.	R.O. OEM	Descripción	Description	Descrizione	Cantidad Quanty Quantità
1	**REC2411-827954T2**	827954T	CIGÜEÑAL	CRANKSHAFT ASSEMBLY	ALBERO MOTORE	1
2	**REC377139**	63742T	COJINETE	BEARING	CUSCINETTO	1
3	**REC26-8173971**	817397 1	RETÉN ACEITE	SEAL OIL	PARAOLIO	1
4	**REC827955A2**	827955A 2	KIT COJINETE	BEARING ASSEMBLY	KIT CUSCINETTO	2
5	**REC705-850026T1K**	850026T 1	PISTÓN	PISTON	PISTONE	3
6	**REC39-831255A6**	831255A 6	KIT AROS	RING SET	KIT FASCE	3
7	**REC640-9612A7**	9612A 6	BIELA	CONNECTING ROD	BIELLA	3
8	**REC29-47270**	47270	COJINETE	BEARING	CUSCINETTO	87
9	**REC10-91012**	91012	TORNILLO (250-28 ESPECIAL)	SCREW (250-28 SPECIAL)	VITE (250-28 SPECIALE)	6
10	**REC31-17514A2**	17514A 1	COJINETE	BEARING	CUSCINETTO	3

65JET / 75 HP / 90 HP (3 CYL)

NEW

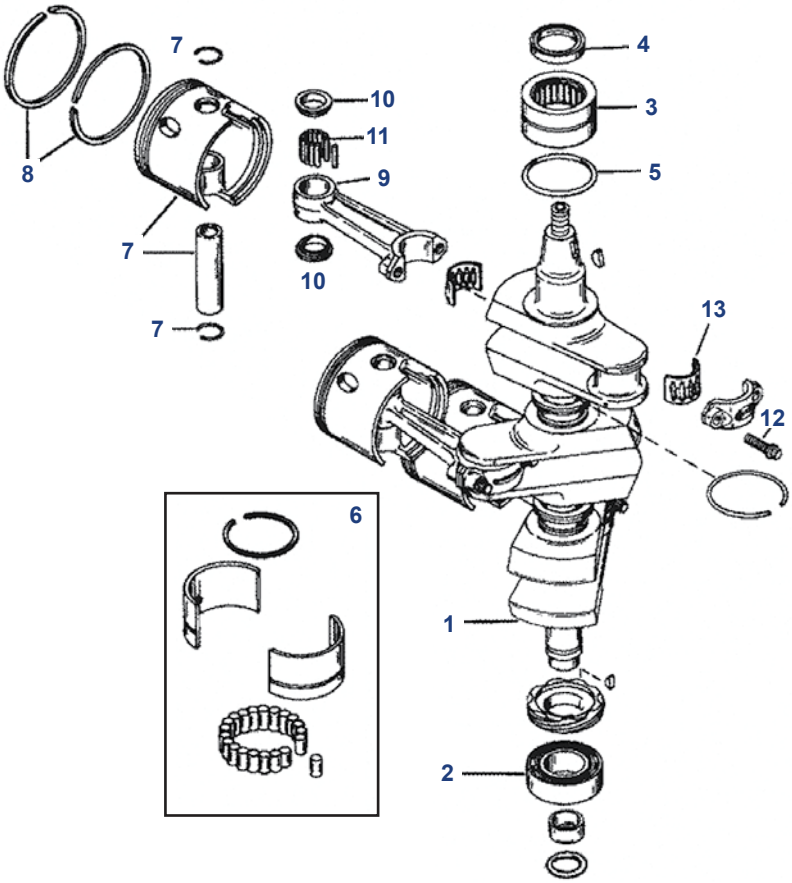

Ref.	R.O.
REC27-43004A99	27-43004A99, **A90**

Kit juntas
Gasket kit
Kit guarnizione

Nº	Ref.	R.O. OEM	Descripción	Description	Descrizione	Cantidad Quanty Quantità
1	**REC493-827616T1**	827616T 1	CIGÜENAL	CRANKSHAFT	ALBERO MOTORE	1
2		43011T	RODAMIENTO	BALL BEARING, LOWER	CUSCINETTO	1
3	**REC31-43013T3**	43013T 3	RODAMIENTO	ROLLER BEARING	CUSCINETTO	1
4	**REC26-43993**	26-43993	RETÉN	SEAL OIL	PARAOLIO	1
5	**REC25-823683**	823683	ARO TÓRICO	O-RING	O-RING	1
6	**REC42943A1**	42943A 1	RODAMIENTO	ROLLER BEARING	CUSCINETTO	2
7	**REC2704-826191T4K**	826191T 4	PISTÓN	PISTON	PISTONE	3
8	**REC39-822321A12**	822321A12	KIT AROS	RING KIT STD	FASCE	3
9	**REC646-818845T6**	818846T 6	BIELA	CONNECTING ROD	BIELLA	3
10	**REC12-8M0012298**	812876	ARANDELA	WASHER	RONDELLA	6
11	**REC29-818391001**	818391	RODAMIENTO	NEEDLE BEARING	SPINOTTO	5
12	**REC10-94320**	94320	TORNILLO	SCREW	VITE	6
13	**REC31-43012A1**	43012A 1	RODAMIENTO	BEARING	CUSCINETTO	3

2 STROKES TIEMPOS

70 / 75 / 80 / 90 HP (3 CYL)
70 HP (9506481 - 9589038)
75 HP (9506481 - 9793576)
80 HP (9506481 - 9589038)
90 HP (9506481 - 9793576)

NEW

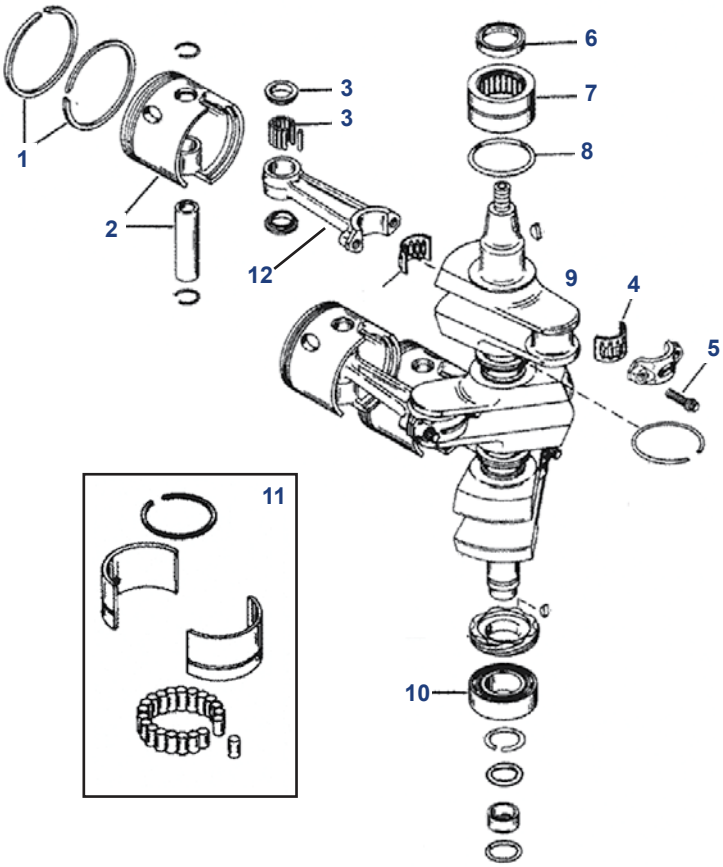

Ref.	R.O.
REC27-43004A99	27-43004A86, A90, **1**

Kit juntas
Gasket kit
Kit guarnizione

Nº	Ref.	R.O. OEM	Descripción	Description	Descrizione	Cantidad Quanty Quantità
1		39-96170A12	KIT ARO PISTÓN STD	PISTON RING STD	FASCE PISTONE STD	3
1		39-96170A4	KIT ARO PISTÓN 0.30	PISTON RING 0.30	FASCE PISTONE 0.30	3
2	**REC777-9009T13**	774-9009A13	KIT PISTÓN STD	PISTON STD KIT	KIT PISTONE STD	3
2	**REC774-9137A11**	774-9137A11	KIT PISTÓN 0.30	PISTON 0.30 KIT	KIT PISTONE 0.30	3
3	**REC29-88258**	29-88258	AGUJA COJINETE	NEEDLE BEARING	SPINOTTO CUSCINETTO	87
4	**REC31-43012A1**	31-43012A1	COJINETE	BEARING	CUSCINETTO	3
5	**REC10-94320**	10-94320	TORNILLO (375-24x1.250")	SCREW (375-24x1.250")	VITE (375-24x1.250")	6
6	**REC26-43993**	26-43993	RETÉN SUPERIOR	UPPER SEAL	TENUTA SUPERIORE	1
7	**REC31-43013T3**	31-43013T3	COJINTE SUPERIOR	ROLLER BEARING	CUSCINETTO SUPERIORE	1
8	**REC25-823683**	25-64067	TÓRICOA	RING	O-RING	1
9		472-9001A3,A2	CIGÜEÑAL	CRAKSHAFT	ALBERO MOTORE	1
10		30-43011T	COJINETE INFERIOR	BEARING	CUSCINETTO INFERIORE	1
11	**REC42943A1**	42943A1	KIT COJINETE	ROLLER BEARING KIT	KIT CUSCINETTO	2
12	**REC638-9002A6**	838-9002A6	BIELA	CONNECTING ROD	BIELLA	3

75 / 90 HP 65 JET (3 CYL)
75 HP (9793577+), 90 HP (9793577+)
65 JET (9793577+)

2 TIEMPOS STROKES

NEW

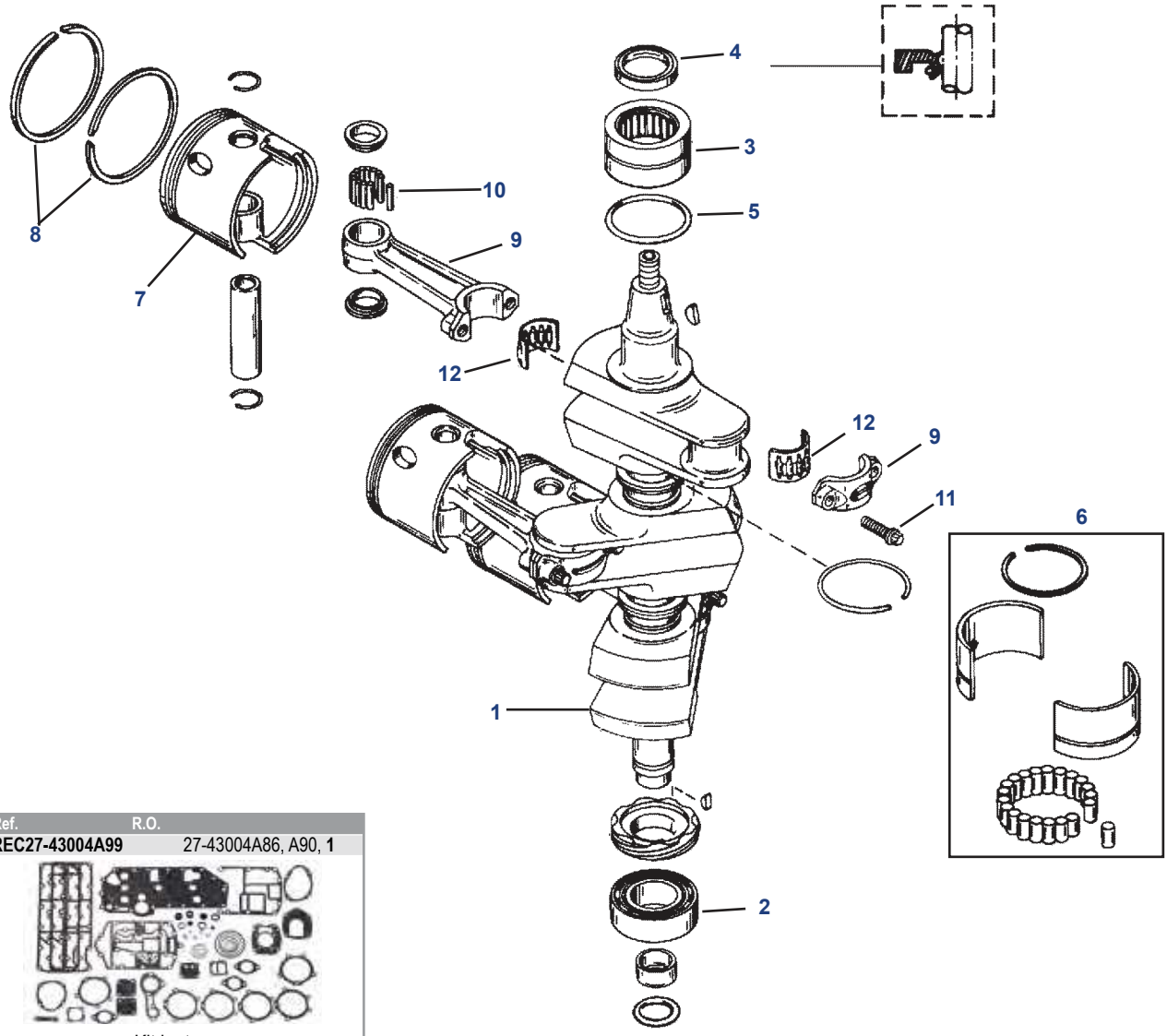

Ref.	R.O.
REC27-43004A99	27-43004A86, A90, 1

Kit juntas
Gasket kit
Kit guarnizione

Nº	Ref.	R.O. OEM	Descripción	Description	Descrizione	Cantidad Quanty Quantità
1	**REC493-827616T1**	827616T 1	CIGÜEÑAL	CRANKSHAFT	ALBERO MOTORE	1
2		43011T	COJINETE INFERIOR	BEARING LOWER	CUSCINETTO INFERIORE	1
3	**REC31-43013T3**	43013T 3	COJINETE SUPERIOR	BEARING UPPER	CUSCINETTO SUPERIORE	1
4	**REC26-43993**	43993	RETÉN ACEITE	SEAL OIL	PARAOLIO	1
5	**REC25-823683**	823683	ARO	O-RING	O-RING	1
6	**REC42943A1**	42943A 1	KIT COJINETE	BEARING SET	KIT CUSCINETTO	2
7	**REC2704-826191T4K**	826191T 4	PISTÓN STD	PISTON STD	PISTONE STD	3
7	**REC2704-821896A4**	821896A 4	PISTÓN 0.30	PISTON 0.30	PISTONE 0.30	3
8	**REC39-822321A12**	822321A12	KIT AROS STD	RING KIT STD	KIT FASCE STD	3
8	**REC39-822321A2**	822321A 2	KIT AROS 0.30	RING KIT 0.30	KIT FASCE 0.30	3
9	**REC646-818845T6**	818846T 6	BIELA	CONNECTING ROD	BIELLA	3
10	**REC29-818391001**	818391001	COJINETE DE AGUJA	BEARING NEEDLE	CUSCINETTO SPINOTTO	87
11	**REC10-94320**	94320	TORNILLO (375-24 X 1.250)	SCREW (375-24 X 1.250)	VITE (375-24 X 1.250)	6
12	**REC31-43012A1**	43012A 1	KIT COJINETE	BEARING	KIT CUSCINETTO	3

BOMBA DE ACEITE
OIL PUMP
POMPA OLIO

Ref.	R.O. / OEM
PAF8-05030300	834967T03

NEW

MOTORES / ENGINES / MOTORI
8, 9.9 HP (209 cc)
(4 T / 4 Stroke / 4 Tempi)

Ref.	R.O. / OEM
PAF8-05030012	27-853523001

NEW

MOTORES / ENGINES / MOTORI
8, 9.9 HP (209 cc)
(4 T / 4 Stroke / 4 Tempi)

Ref.	R.O. / OEM
PAF15-07040500	834967A1

NEW

MOTORES / ENGINES / MOTORI
8 HP (Bodensee) (4 T / 4 Stroke / 4 Tempi) (inter.)
9.9 HP (323cc) (4 T / 4 Stroke / 4 Tempi)
13.5 HP (4 T / 4 Stroke / 4 Tempi) (inter.)
15 HP (4 T / 4 Stroke / 4 Tempi)

Ref.	R.O. / OEM
PAF15-07040016	27-853523

NEW

MOTORES / ENGINES / MOTORI
8 HP (Bodensee) (4 T / 4 Stroke / 4 Tempi) (inter.)
9.9 HP (323cc) (4 T / 4 Stroke / 4 Tempi)
13.5 HP (4 T / 4 Stroke / 4 Tempi) (inter.)
15 HP (4 T / 4 Stroke / 4 Tempi)

Ref.	R.O. / OEM
PAF25-05050400	852388T1

NEW

MOTORES / ENGINES / MOTORI
25 HP (4 T / 4 Stroke / 4 Tempi)

PISTONES, AROS, BULONES Y RODAMIENTOS
PISTONS, RINGS, PINS AND BEARINGS
PISTONI, FASCE, BULLONI E CUSCINETTI

RECmar® La gama de pistones RECMAR®, se suministra siempre como kit, compuesto por pistón, aros, bulón y clips. Eventualmente las referencias antiguas sufren cambios de numeración. En caso de duda contacten con nuestros técnicos comerciales.
The RECMAR® piston assortment is allways supplied as a set (piston, rings, pins and bearings). Old references may change. In case of any doubt contact our technicians.
La gamma dei pistoni RECMAR®, si vende sempre come kit, composto da pistoni, fasce, bulloni e clips. Le referenze vecchie avranno un cambio di numerazione. In caso di dubbi contattare i nostri tecnici commerciali.

Ref.	R.O.		
PAF8-05020101	700-834963A02	Kit Pistón/ Piston kit/ Kit Pistoni	STD
PAF8-05020105	41-825713001	Bulón / Pin / Bullone	
PAF8-05020102	39-8M0055809	Aros / Rings / Fasce	
PAF15-07020005	53-16057	Clip	

NEW

MOTORES / ENGINES / MOTORI
8 HP (209 cc) (4 T / 4 Stroke / 4 Tempi)
9.9 HP (209 cc) (4 T / 4 Stroke / 4 Tempi)

Ref.	R.O.		
PAF15-07020001	700-834963	Kit Pistón/ Piston kit/ Kit Pistoni	STD
PAF15-07020006	41-825713	Bulón / Pin / Spinotto	
REC66N-11603-00		Aros / Rings / Fasce	
PAF15-07020005	53-82345M	Clip	

NEW

MOTORES / ENGINES / MOTORI
8 HP (Bodensee) (4 T / 4 Stroke / 4 Tempi) (inter.)
9.9 HP (323cc) (4 T / 4 Stroke / 4 Tempi)
13.5 HP (4 T / 4 Stroke / 4 Tempi) (inter.)
15 HP (4 T / 4 Stroke / 4 Tempi)

Ref.	R.O.		
PAF25-05020100	713-856064A1	Kit Pistón/ Piston kit/ Kit Pistoni	STD
PAF25-05020105	41-825016	Bulón / Pin / Spinotto	
REC67C-11603-00		Aros / Rings / Fasce	
PAF25-05020106	40-825017	Clip	

MOTORES / ENGINES / MOTORI
25 - 60 HP (2, 3 & 4 cyl) (4 T / 4 Stroke / 4 Tempi)
Carb & EFI

NEW

Ref.	R.O.		
WI3183PS	767-879878T5	Kit Pistón/ Piston kit/ Kit Pistoni	**STD**
REC93450-13022	93450-13022	Clip	

MOTORES / ENGINES / MOTORI
Ø 65 mm / 2.562" STD
2 cyl (USA 0G202750 / EURO 9855587+)
15 HP SEA PRO, XD, SUPER 15
20 HP / JET
25 HP SEA PRO / MARATHON

Ref.	R.O.		
WI3182P2		Kit Pistón/ Piston kit/ Kit Pistoni	**0.20**
REC93450-13022	93450-13022	Clip	

MOTORES / ENGINES / MOTORI
Ø 65 mm / 2.562" STD
2 cyl (USA 0G202749 / EURO 98555868+)
15 HP SEA PRO
15 HP SEA PRO XD / SUPER 15
20 HP / JET
25 HP SEA PRO / MARATHON

Ref.	R.O.		
REC705-850026T1K	705-850026A3	Kit Pistón/ Piston kit/ Kit Pistoni	**STD**
WI3179P3		Kit Pistón/ Piston kit/ Kit Pistoni	**0.30**
REC39-821695A4	39-821695A4	Aros / Rings / Fasce	**STD**
REC29-47270	29-47270	Rodamientos / Bearing / Cuscinetto	

MOTORES / ENGINES / MOTORI
Ø 76 mm / 2.993" STD

2 cyl
30 HP (1994-02)
30 JET (1998-02)

3 cyl
40 HP (1997-02)
50 HP (1998-02)
55 HP (1998-02)
60 HP (1998-02)

Ref.	R.O.		
REC780-9229A7	780-9229A7	Kit Pistón/ Piston kit/ Kit Pistoni	**STD**
REC39-18653A12	39-18653A12	KIT Aros / Rings / Fasce	**STD**

MOTORES / ENGINES / MOTORI
Ø 65 mm / 2.565" STD
Modelos / models / Modelli: Crossflow

4 cyl en línea / Inline / in rete
30 JET (1998-02)
40 HP (1990-97)
45 HP (1985-89)
50 HP (1970-85)

Ref.	R.O.		
REC774-9137A11	774-9137A11	Kit Pistón/ Piston kit/ Kit Pistoni	**0.30**
REC39-817096A6	39-817096A6	KIT Aros / Rings / Fasce	**STD**

MOTORES / ENGINES / MOTORI
Ø 73 mm / 2.875" STD
Modelos / models / Modelli: Crossflow

2 cyl
35 HP (1984-89)
40 HP (1972-83)

3 cyl
40 HP (1990-97)
50 JET (1984-90)
50 HP / 60 HP (1984-90)
70 HP (1977-83)

4 cyl
en línea / Inline / in rete
75 HP (1984-86)
80 HP (1978-83)
85 HP (1973-77)

6 cyl
en línea / Inline / in rete
90 HP (1978-86)
115 HP (1984-88)
135 HP (1970-71)
140 HP (1978-80)
150 HP (1973-78)

Ref.	R.O.		
REC783-9613A1K	783-9613T1	Kit Pistón/ Piston kit/ Kit Pistoni	**STD**
REC783-9613T3	783-9613T3	Kit Pistón/ Piston kit/ Kit Pistoni	**0.30**
REC39-19721A6	39-19721A6	KIT Aros / Rings / Fasce	**STD**
REC29-47270	29-47270	Rodamientos / Bearing / Cuscinetto	

MOTORES / ENGINES / MOTORI
Ø 76 mm / 2.993" STD
Modelos / models / Modelli: Crossflow

3 cyl
45 JET (1984-90)
50 HP / 55 HP / 60 HP (1998-02)

Ref.	R.O.		
REC2704-826191T4K	2704-826191A4	Kit Pistón/ Piston kit/ Kit Pistoni	**STD**
REC2704-821896A4	2704-821896A4	Kit Pistón/ Piston kit/ Kit Pistoni	**0.30**
REC39-822321A12	39-822321A12	KIT Aros / Rings / Fasce	**STD**
REC39-822321A2	39-822321A2	KIT Aros / Rings / Fasce	**0.30**
REC29-818391001	29-818391	Rodamientos / Bearing / Cuscinetto	

MOTORES / ENGINES / MOTORI
Ø 88.9 mm / 3.500" STD
Modelos / models / Modelli: LoopCharge

3 cyl
65 / 80 JET (1994-98)
75 / 90 HP (1994-04)

4 cyl
100 HP (1994-01)
115 HP (1994-04)
125 HP (1994-04)

Ref.	R.O.		
REC777-9009T13	777-9009T13	Kit Pistón/ Piston kit/ Kit Pistoni	**STD**
REC777-9009A7	777-9009A7	Kit Pistón/ Piston kit/ Kit Pistoni	**0.30**
	39-96170A12	KIT Aros / Rings / Fasce	**STD**
REC29-88258	29-88258	Rodamientos / Bearing / Cuscinetto	

MOTORES / ENGINES / MOTORI
Ø 85 mm / 3.375" STD
Biela / Connecting Rod / Biella: 638-8532-1.
Modelos / models / Modelli: LoopCharge

3 cyl
70 HP (1987-89)
75 HP (1990-93)
80 HP (1987-89)
90 HP (1987-93)

4 cyl
100 HP (1989-93)
115 HP (1989-93)

Ref.	R.O.		
REC777-815965A4	777-815965A4	Kit Pistón/ Piston kit/ Kit Pistoni	**STD**
REC777-815965A6	777-815965A6	Kit Pistón/ Piston kit/ Kit Pistoni	**0.30**
	39-96170A12	KIT Aros / Rings / Fasce	**STD**
REC29-818391001	29-818391	Rodamientos / Bearing / Cuscinetto	

MOTORES / ENGINES / MOTORI
Ø 85 mm / 3.375" STD
Biela / Connecting Rod / Biella: 646-818846.
Modelos / models / Modelli: LoopCharge

3 cyl
70 HP (1987-89)
75 HP (1990-93)
80 HP (1987-89)
90 HP (1987-93)

4 cyl
100 HP (1989-93)
115 HP (1989-93)

Ref.	R.O.			
REC765-7442T36	765-7442T36	Kit Pistón/ Piston kit/ Kit Pistoni	PORT	STD
REC765-7446T12	765-7446T12	Kit Pistón/ Piston kit/ Kit Pistoni	PORT	0.30
REC765-7441T36	765-7441T36	Kit Pistón/ Piston kit/ Kit Pistoni	STBD	STD
REC765-7445A12	765-7445A12	Kit Pistón/ Piston kit/ Kit Pistoni	STBD	0.30
REC29-67483	29-67483	Rodamientos / Bearing / Cuscinetto		

MOTORES / ENGINES / MOTORI
Ø 79 mm / 3.125" STD
Modelos / models / Modelli: LoopCharge V-6 60º

Mod.	Cyl.		Biela / Rod / Biella
V135	6	0A904646-0D081999	636-8118
V150	6	4868998-0D081999	636-8118
V150 XR2		468998-0A904645	
V175	6	4301235-6618750	

Ref.	R.O.			
REC785-9737T9	785-9737T9	Kit Pistón/ Piston kit/ Kit Pistoni	PORT	STD
REC785-9738T9	785-9738T9	Kit Pistón/ Piston kit/ Kit Pistoni	STBD	STD
REC14450		Kit Pistón/ Piston kit/ Kit Pistoni	PORT	0.30
REC14460		Kit Pistón/ Piston kit/ Kit Pistoni	STBD	0.30
REC39-822321A12	39-822321A12	Aros / Rings / Fasce	2 mm	
REC39-822321A2	39-822321A12	Aros / Rings / Fasce	2 mm	

MOTORES / ENGINES / MOTORI
Ø 88.9 mm / 3.500" STD / 3.530" 0.30
Estos pistones vienen con aros de 2 mm.
All pistons core with 2 mm.
Tali pistoni sono dotati di anelli di 2 mm.
Modelos / models / Modelli: LoopCharge V-6 60º

Mod.	Cyl.		Biela / Rod / Biella
V140 Jet	6	0G760300-0T178499	
XR6, MAGIII	6	0D082000-1B226999	
150 XRI	6	0D082000-0G303045	
175 XRI	6	0D000750-0G303045	
V175 2.5L	6	0D082000-0G960499	
200 XRI	6	0C291520-0G303045	
V200 2.5L	6	0D082000-1B226999	
V200 2.5L	6	0C291520-0D081999	644-818141
V200 EFI	6	0G303046-0T408999	644-818141

Ref.	R.O.			
REC765-7442T32	765-7442T32	Kit Pistón/ Piston kit/ Kit Pistoni	PORT	STD
REC765-7446A11	765-7446A11	Kit Pistón/ Piston kit/ Kit Pistoni	PORT	0.30
REC765-7441T32	765-7441T32	Kit Pistón/ Piston kit/ Kit Pistoni	STBD	STD
REC765-7445T11	765-7445T11	Kit Pistón/ Piston kit/ Kit Pistoni	STBD	0.30
REC29-822553	29-822553	Rodamientos / Bearing / Cuscinetto		

MOTORES / ENGINES / MOTORI
Ø 79 mm / 3.125" STD
Modelos / models / Modelli: LoopCharge V-6 60º

Mod.	Cyl.		Biela / Rod / Biella
V150 Jet	6	0G760299	
V135	6	0C239553-0T178499	
V135	6	0C239553-0T178499	644-818141
V140 Jet		0G760299+	
V150	6	0C239553-0G760299	644-818141

Ref.	R.O.			
REC766-8667T41	766-8667T41	Kit Pistón/ Piston kit/ Kit Pistoni	PORT	STD
REC14355		Kit Pistón/ Piston kit/ Kit Pistoni	PORT	0.30
REC766-8666741	766-8666T41	Kit Pistón/ Piston kit/ Kit Pistoni	STBD	STD
REC14365		Kit Pistón/ Piston kit/ Kit Pistoni	PORT	0.30
REC39-813011A12	39-813011A12	Aros / Rings / Fasce		STD
REC29-67483	29-67483	Rodamientos / Bearing / Cuscinetto		

MOTORES / ENGINES / MOTORI
Ø 85 mm / 3.375" STD
Modelos / models / Modelli: LoopCharge
V-6, XR4, MAG II

V175	6618751 - 0C239552
V100	5624878 - 0C219519
V200 EFI	9C100861 - 0C999999
V220	0B117316+
V225	5628028+

Ref.	R.O.			
REC2720-881054T10K	2720-881054T3	Kit Pistón/ Piston kit/ Kit Pistoni	PORT	STD
REC2720-881055T10K	2720-881055T3	Kit Pistón/ Piston kit/ Kit Pistoni	STBD	STD
REC29-88258	29-88258001	Rodamientos / Bearing / Cuscinetto		

MOTORES / ENGINES / MOTORI
200 / 225 HP 3.0L DFI-DTS

COJINETE
BEARING
CUSCINETTO

COJINETE PIE DE BIELA
CONNECTING ROAD FOOT, BEARING
CUSCINETTO BIELLA

Ref.	R.O. / OEM
REC31-16052	31-16052

MOTORES / ENGINES / MOTORI
4 - 18 HP

COJINETE CABEZA DE BIELA
CONNECTING ROAD HEAD, BEARING
CUSCINETTO BIELLA

Ref.	R.O. OEM	Ø	Agujas Needle Aghi	Jaula Cage Gabbia
REC31-43012A1	31-43012A1, A2	1.4063"	16	Metal / Metallo

MOTORES / ENGINES / MOTORI
60 - 250HP

Ref.	R.O. / OEM
REC31-8130482	31-813048 2

MOTORES / ENGINES / MOTORI
25 / 30 / 40 HP (Inter.)

Ref.	R.O. / OEM
REC31-17514A2	8M0045428

MOTORES / ENGINES / MOTORI
30 - 60 HP
V-135 - V200 / XR-6

Ref.	R.O. / OEM
REC827955A2	827955A2

MOTORES / ENGINES / MOTORI
30 - 60 HP

Ref.	R.O. / OEM
REC42943A1	42943A1

MOTORES / ENGINES / MOTORI
70 - 115 HP

AGUJAS DE COJINETE
NEEDLE BEARING
AGHI CUSCINETTO

REF.	R.O. OEM	L +0 -0.008	D Ø +0 -0.002
REC29-47270	29-47270	41/64"	3/32"
REC29-67483	29-67483	51/64"	3/32"
REC29-71422-1	29-71422-1	39/64"	5/32"
REC29-818391001	29-818391 818391001	59/64"	3/32"
REC29-822553	29-822553	45/64"	3/32"
REC29-88258	29-88258	1-1/32"	3/32"

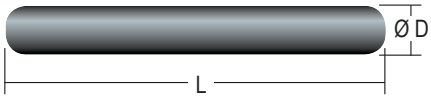

KITS COJINETE
CAGED BEARING KITS
KITS CUSCINETTO

Ref.	R.O. OEM	Ø	Agujas Needle Aghi	Jaula Cage Gabbia
REC31-17514A2	31-17514A1, A2	1.1825" 30 mm	16	Metal / Metal / Metallo
REC31-8036752	31-803675 2			
REC31-879877A1	31-879877A1	0.875"	16	Metal / Metal / Metallo
REC31-62596A1	31-62596A1	1.125"	16	Metal / Metal / Metallo
REC378252	31-67445	1.375"	16	Metal / Metal / Metallo
REC5007190	31-88269T	2.1875"	16	Plástico / Plastic / Plastica

REC31-17514A2

REC31-8036752

REC5007190

REC31-879877A1
REC31-62596A1

REC378252

Ref.	R.O. OEM	Motores Engines Motori
REC31-813048	31-813048	4 / 5 HP
REC31-16756A4	31-16756A4	
REC31-43013T3	31-43012T3	75 a / to 125 HP
REC31-74248T	31-74248T	

REC31-813048

REC31-16756A4
REC31-74248T
REC31-43013T3

GUÍA BIELAS, CIGÜEÑAL Y PISTÓN
CONNECTING ROAD, CRANKSHAFT & PISTON GUIDE
GUIDA BIELLE, ALBERO MOTORE E PISTONE

4 STROKES TIEMPOS

MODELO MODEL MODELLO	SERIE SERIAL SERIE	BIELA CONNEC. ROAD BIELLA	CIGÜEÑAL CRANKSHAFT ALBERO MOTORE	PISTÓN PISTON PISTONE
8 Bodensee (Inter.)	OP086824 - OP4000999	**PAF15-07020100**	**PAF15-07030000**	**PAF15-07020001**
8 & 9.9 (209cc)	OP325500 +	**PAF8-05020200**	**PAF8-05020001**	**PAF8-05020101**
9.9 (323cc)	OP075166 - OP400999	**PAF15-07020100**	**PAF15-07030000**	**PAF15-07020001**
13.5 (Inter.)	OP134638 +	**PAF15-07020100**	**PAF15-07030000**	**PAF15-07020001**
15.	9973100 +	**PAF15-07020100**	**PAF15-07030000**	**PAF15-07020001**
25.	9973100 +	**PAF25-05020200**	**PAF25-05020001**	**PAF25-05020100**

GUÍA BIELAS, CIGÜEÑAL Y PISTÓN
CONNECTING ROAD, CRANKSHAFT & PISTON GUIDE
GUIDA BIELLE, ALBERO MOTORE E PISTONE

2 TIEMPOS STROKES

MODELO MODEL MODELLO	SERIE SERIAL SERIE	BIELA CONNEC. ROAD BIELLA	CIGÜEÑAL CRANKSHAFT ALBERO MOTORE	PISTÓN PISTON PISTONE
4A	6E0-001011 +	**REC6E0-11651-01**		**REC6E0-11631-00-98K**
4/5	OP017000 +			**REC779-9615T**
4/5 (1 Cyl, JAPAN)	477830 - 9589153			**REC779-9615T**
6 & 8 (2 Cyl) (INTER.)	ON027903 +	**REC629-8036741**		**REC779-804886**
6 & 8 (2 Cyl) (INTER.)	ON055110 +	**REC629-8036741**		**REC779-804886**
8 SEAPRO (2 Cyl) (INTER.)	ON14717 +	**REC629-8036741**		**REC779-804886**
9.8 (2 Cyl) (INTER.)	ON007788 - ON055109	**REC629-8036741**		**REC779-804886**
9.8 SEAPRO (2 Cyl) (INTER.)	ON055110 +	**REC629-8036741**		**REC779-804886**
9.9 (2 Cyl) (INTER.)	ON059858 +	**REC629-803674**		**REC779-803677T02**
15 (2 Cyl) (INTER.)	ON001590 +	**REC629-803674**		**REC779-803677**
18 (2 Cyl) (INTER.)	ON001590 +	**REC629-803674**		**REC779-803677**
25 JET (2 Cyl) (INTER.)	ON088578 +	**REC629-813047T01**		**REC779-879194T01**
25 & 30 (2 Cyl) (INTER.)	ON055505 +	**REC629-813047T01**		**REC779-879194T01**
30 JET (3 Cyl)	9973100 +	**REC640-9612A7**		**REC705-850026T1K**
40 (INTER.)	ON056265 +	**REC629-880855**		**REC779-96152**
40 LIGHTNING (INTER.)	ON000001- ON056164	**REC629-880855**		**REC779-96152**
40 LIGHTNING XR (INTER.)	ON000513 +	**REC629-880855**		**REC779-96152**
40MXL SEAPRO	ON037781 - ON056164	**REC629-880855**		**REC779-96152**
40 (3 Cyl)	9973100 +	**REC640-9612A7**		**REC705-850026T1K**
40 JET	OP094500 +	**REC640-9612A7**	**REC2411-827954T2**	**REC705-850026T1K**
45 JET	9973100 - OP094499	**REC640-9612A7**	**REC2411-827954T2**	**REC705-850026T1K**
50MH	ON056165 +	**REC629-880855**		**REC779-96152**
50 (3 Cyl)	9683055 - 9973099	**REC640-9612A7**		**REC783-9613A1K**
50 (3 Cyl)	9973100 +	**REC640-9612A7**		**REC783-9613A1K**
55 & 60 (3 Cyl)	9973100 +	**REC640-9612A7**	**REC2411-827954T2**	**REC705-850026T1K**
60 BIGFOOT (3 Cyl)	9973100 +	**REC640-9612A7**	**REC2411-827954T2**	**REC705-850026T1K**
65 & 80 JET	9793577 +	**REC646-818845T6**	**REC493-827616T1 (NOT 80HP)**	**REC2704-826191T4K**
75 & 90 (3 Cyl)	9483121 - 9793576 (638-8532-1)	**REC638-9002A6**		**REC777-9009T13**
75 & 90 (3 Cyl)	9483121 - 9793576 (646-818846)	**REC646-818845T6**		**REC777-815965A4**
75 & 90 (3 Cyl)	9793577 +	**REC646-818845T6**	**REC493-827616T1**	**REC2704-826191T4K**
100 & 115 (4 Cyl)	9523034 - 9793576 (638-8532-1)	**REC638-9002A6**		**REC777-9009T13**
100 & 115 (4 Cyl)	9523034 - 9793576 (646-818846)	**REC646-818845T6**		**REC777-815965A4**
100 (4 Cyl)	9793577 - OP058999	**REC646-818845T6**		**REC2704-826191T4K**
115 & 125 (4 Cyl)	9793577 +	**REC646-818845T6**		**REC2704-826191T4K**

GUÍA DE PISTONES USA
USA PISTON GUIDE
GUIDA PISTONE USA

Modelo Model Modello 60º V6	Serie Serial Serie	PISTÓN / PISTON / PISTONE PORT		PISTÓN / PISTON / PISTONE STB		AROS / RING / FASCE	
		STD	0.30	STD	0.30	STD	0.30
V-105 Jet	OD082000+	REC765-7442T32	REC765-7446A11	REC765-7441T32	REC765-7445T11	REC39-93481A12	
V-135 Biela / Rod / Biella 636-8118	OA904646 - OD081999	REC785-9737T9	REC765-7446T12	REC765-7441T36	REC765-7445A12	REC39-93481A12	
V-135 Biela / Rod / Biella 644-818141	OA904646 - OD081999	REC765-7442T32	REC765-7446A11	REC765-7441T32	REC765-7445T11	REC39-93481A12	
V-135	OD082000+	REC765-7442T32	REC765-7446A11	REC765-7441T32	REC765-7445T11	REC39-93481A12	
V-140 Jet	0D082000+	REC785-9737T9	REC14450	REC785-9738T9	REC14460		
V-150 Biela / Rod / Biella 636-8118	OA904646 - OD081999	REC785-9737T9	REC765-7446T12	REC765-7441T36	REC765-7445A12	REC39-93481A12	
V-150 Biela / Rod / Biella 644-818141	OA904646 - OD081999	REC765-7442T32	REC765-7446A11	REC765-7441T32	REC765-7445T11	REC39-93481A12	
V-150	OD082000+	REC765-7442T32	REC765-7446A11	REC765-7441T32	REC765-7445T11	REC39-93481A12	
XR6/ MAGIII	OD082000+	REC785-9737T9	REC14450	REC785-9738T9	REC14460		
V-175	6618751 - OC239552	REC766-8667T41	REC14355	REC766-8666741	REC14365	REC39-813011A12	
V-175	4301235+	REC765-7442T36	REC765-7446T12	REC765-7441T36	REC765-7445A12	REC39-93481A12	
V-175	OD082000+	REC785-9737T9	REC14450	REC785-9738T9	REC14460		
V-200	4839034 - OC291519	REC766-8667T41	REC14355	REC766-8666741	REC14365	REC39-813011A12	
V-200 Biela / Rod / Biella 644-818141	OC291520 - OD081999	REC785-9737T9	REC14450	REC785-9738T9	REC14460		
V-200	OD082000+	REC785-9737T9	REC14450	REC785-9738T9	REC14460		
V-220 Laser	OB117316+	REC766-8667T41	REC14355	REC766-8666741	REC14365	REC39-813011A12	
V-225 (2.4L)	5628028+	REC766-8667T41	REC14355	REC766-8666741	REC14365	REC39-813011A12	

GUÍA DE PISTONES EUROPEOS
EUROPEAN PISTON GUIDE
GUIDA PISTONE EUROPEA

HP	Cyl.	Serie Serial Serie	PISTÓN / PISTON / PISTONE			AROS / RINGS / FASCE			Clip Circlip Clip	Rodamiento Bearing Cuscinetto	BIELA / CONNECTING ROD / BIELLA	
			Ref. STD STD Ref. Ref. STD	R.O. STD STD OEM R.O. STD	Ref. 0.30 0.30 Ref. Ref. 0.30	Ref. STD STD Ref. Ref. STD	R.O. STD STD OEM R.O. STD	Ref. 0.30 0.30 Ref. Ref. 0.30			REF.	Rodamiento Bearing Cuscinetto
4 / 5 HP	1	0P017000	REC779-9615T	779-9615T		REC8M0080357	8M0080357		REC53-16057	REC31-16052		REC31-813048
6 / 8 / 9.8 HP (Inter.)	2		REC779-804886	779-804886		REC39-803678A3	39-803678A3		REC41-8036801	REC31-8036752	REC629-8036741	
9.9 / 15 HP (Inter.)	2		REC779-803677T02	779-803677002		REC8M0080357	8M0080357		REC53-16057	REC31-16052	REC629-803674	
9.9 / 15C	2		REC6E7-11631-00K	761-7982M-T		REC682-11610-01	39-15320M		REC93450-15023	REC93602-14104		
15 SEA PRO XD SUPER 15	2	9855587+	WI3183PS	767-879878T5			39-827491A12					REC31-879877A1
18HP (Inter.)	2		REC779-803677	779-803677		REC39-803678A1	39-803678A1		REC53-16057	REC31-16052	REC629-803674	
20 JET	2	9855587+	WI3183PS	767-879878T5			39-827491A12					REC31-879877A1
25 SEA PRO MARATHON	2	9855587+	WI3183PS	767-879878T5			39-827491A12					REC31-879877A1
25 / 30 HP (Inter.)	2	062931+	REC779-879194T01	779-879194T01		REC39-16054A5	39-16054A5		REC53-16057	REC345-00042-0	REC629-813047T01	REC31-8130482
30A	2		REC689-11631-00K	761-8484M		REC689-11610-00	39-14235M		REC663-11634-00	REC93602-20M02	REC689-11651-00	REC93310-624U5
30, 40HP	2	9973100+	REC705-850026T3	705-850026A3		REC39-821695A4	39-821695A4			REC29-47270		REC31-17514A2
35.	2	9384476+		774-9137A9	REC774-9137A11	REC39-817096A6	39-817096A6			REC29-47270		
40 Lightning XR/MXL (Inter.)	3		REC779-96152	779-96152		REC8M0080349	8M0080349		REC53-16057	REC345-00042-0		
40 (40,402)	2	3339688+		774-9137A9	REC774-9137A11	REC39-817096A6	39-817096A6			REC29-47270		
40.	3	9973100+	REC705-850026T3	705-850026A3		REC39-821695A4	39-821695A4			REC29-47270	REC640-9612A7	REC31-17514A2
40 Aros / Rings / Fasce Keystone	4	9570790+	REC780-9229A7	780-9229A7		REC39-18653A12	39-18563A12					
45 Aros / Rings / Fasce Keystone	4	9248006+	REC780-9229A7	780-9229A7		REC39-18653A12	39-18563A12	REC39-18653A2				
50 (500) Aros / Rings / Fasce Keystone	4	9001581+	REC780-9229A7	780-9229A7		REC39-18653A12	39-18563A12	REC39-18653A2				
50.	3	9385111 - 9683054		774-9137A9	REC774-9137A11	REC39-817096A6	39-817096A6			REC29-47270		
50.	3	9683055 - 9973099	REC783-9613A1K	783-9613A1	REC783-9613T3	REC39-19721A6	39-19721A6	REC39-19721A2		REC29-47270		REC31-17514A2
50.	3	9973100+	REC705-850026T3	705-850026A3		REC39-821695A4	39-821695A4			REC29-47270		REC31-17514A2
55.	3	9683055 - 9973099	REC783-9613A1K	783-9613T1	REC783-9613T3	REC39-19721A6	39-19721A6	REC39-19721A2		REC29-47270	REC640-9612A7	REC31-17514A2
55.	3	9973100+	REC705-850026T3	705-850026A3		REC39-821695A4	39-821695A4			REC29-47270		REC31-17514A2
60.	3	9385911 - 9683054	REC774-9137A9	774-9137A9	REC774-9137A11	REC39-817096A6	39-817096A6			REC29-47270		
60.	3	9683055 - 9973099	REC783-9613A1K	783-9613T1	REC783-9613T3	REC39-19721A6	39-19721A6	REC39-19721A2		REC29-47270	REC640-9612A7	REC31-17514A2
60.	3	9973100+	REC705-850026T3	705-850026A3		REC39-821695A4	39-821695A4			REC29-47270	REC640-9612A7	REC31-17514A2
65.	3	9020074 - 9135824	REC774-9137A9	774-9137A9	REC774-9137A11	REC39-817096A6	39-817096A6			REC29-47270		REC31-62596A1
70.	3	9135825 - 9385910	REC774-9137A9	774-9137A9	REC774-9137A11	REC39-817096A6	39-817096A6			REC29-47270		REC31-62596A1
70 Biela / Rod / Biella 683-8532-1	3	9483121+	REC777-9009T13	777-9009T13	REC777-9009A7	REC39-6170A12	39-96170A12	REC39-96170A4		REC29-88258		REC31-43012A1
70 Biela / Rod / Biella 646-8188461	3	9483121+	REC777-815965A4	777-815965A4	REC777-815965A6	REC39 6170A12	39-96170A12	REC39-96170A4		REC29-818391001	REC646-818845T6	REC31-43012A1
75.	4	9393856+	REC774-9137A9	774-9137A9	REC774-9137A11	REC39-817096A6	39-817096A6			REC29-47270		REC31-62596A1
75 Biela / Rod / Biella 638-8532-1	3	9589039 - 9793576	REC777-9009T13	777-9009T13	REC777-9009A7	REC39-6170A12	39-96170A12	REC39-96170A4		REC29-88258		REC31-43012A1
75 Biela / Rod / Biella 646-818846	3	9589039 - 9793576	REC777-815965A4	777-815965A4	REC777-815965A6	REC39-6170A12	39-96170A12	REC39-96170A4		REC29-818391001	REC646-818845T6	REC31-43012A1
75.	3	9793577+	REC2704-826191T4K	2704-826191A4	REC2704-821896A4	REC39-822321A12	39-822321A12	REC39-822321A2		REC29-818391001	REC646-818845T6	REC31-43012A1
80 (800)	4	9177626 - 93933855		774-9137A9	REC774-9137A11	REC39-817096A6	39-817096A6			REC29-47270		REC31-62596A1
85 (850)	4	9011604 - 9177625		774-9137A9	REC774-9137A11	REC39-817096A6	39-817096A6			REC29-47270		REC31-62596A1
90 Biela / Rod / Biella 638-8532-1	3	9483121 - 9793576	REC777-9009T13	777-9009T13	REC777-9009A7		39-96170A12			REC29-88258		REC31-43012A1
90 Biela / Rod / Biella 646-818846	3	9483121 - 9793576	REC777-815965A4	777-815965A4	REC777-815965A6		39-96170A12			REC29-818391001	REC646-818845T6	REC31-43012A1
90.	3	9793577+	REC2704-826191T4K	2704-826191T4	REC2704-821896A4	REC39-822321A12	39-822321A12	REC39-822321A2		REC29-818391001	REC646-818845T6	REC31-43012A1
100 Biela / Rod / Biella 638-8532-1	4	9523034 - 9793576	REC777-9009T13	777-9009T13	REC777-9009A7		39-96170A12			REC29-88258		REC31-43012A1

HP	Cyl.	Serie Serial Serie	PISTÓN / PISTON / PISTONE Ref. STD STD Ref. Ref. STD	R.O. STD STD OEM R.O. STD	Ref. 0.30 0.30 Ref. Ref. 0.30	AROS / RINGS / FASCE Ref. STD STD Ref. Ref. STD	R.O. STD STD OEM R.O. STD	Ref. 0.30 0.30 Ref. Ref. 0.30	Clip Circlip Clip	Rodamiento Bearing Cuscinetto	BIELA / CONNECTING ROD / BIELLA REF.	Rodamiento Bearing Cuscinetto
100 Biela / Rod / Biella 646-818846	4	9523034 - 9593576	REC777-815965A4	777-815965A4	REC777-815965A6					REC29-818391001	REC646-818845T6	REC31-43012A1
100.	4	9793577+	REC2704-826191T4K	2704-826191T4	REC2704-821896A4	REC39-822321A12	39-822321A12	REC39-822321A2		REC29-818391001	REC646-818845T6	REC31-43012A1
115 Biela / Rod / Biella 638-8532-1	4	9559771 - 9793576	REC777-9009T13	777-9009T13	REC777-9009A7					REC29-818391001		REC31-43012A1
115 Biela / Rod / Biella 646-818846	4	9559771 - 9593576	REC777-815965A4	777-815965A4	REC777-815965A6					REC29-818391001	REC646-818845T6	REC31-43012A1
115	4	9793577+	REC2704-826191T4K	2704-826191T4	REC2704-821896A4	REC39-822321A12	39-822321A12	REC39-822321A2		REC29-818391001	REC646-818845T6	REC31-43012A1
125	4	0P017000+	REC2704-826191T4K	2704-826191T4	REC2704-821896A4	REC39-822321A12	39-822321A12	REC39-822321A2		REC29-818391001	REC646-818845T6	REC31-43012A1
125 (1250)	6			774-9137A9	REC774-9137A11	REC39-817096A6	39-817096A6			REC29-47270		REC31-62596A1
135 (1350)	6			774-9137A9	REC774-9137A11	REC39-817096A6	39-817096A6			REC29-47270		REC31-62596A1
140 (1400)	6			774-9137A9	REC774-9137A11	REC39-817096A6	39-817096A6			REC29-47270		REC31-62596A1
150 (1500)	6			774-9137A9	REC774-9137A11	REC39-817096A6	39-817096A6			REC29-822553	REC644-818141A2	REC31-16756A6
200 & 225 (3.0L) DFI-DTS	6	PORT PISTON	REC2720-881054T10K	2720-881054T10						REC29-88258	REC647-822373A09	REC31-43012A1
200 & 225 (3.0L) DFI-DTS	6	ST D PISTON	REC2720-881055T10K	2720-881055T10						REC29-88258	REC647-822373A09	REC31-43012A1

AROS ESTANDAR PARA PISTONES
STANDARD PISTON RINGS
FASCE STANDARD PER PISTONI

HP	desde serie from serial della serie	hasta serie to serial alla serie	Biela Conn. rod Biella	Aros Rings Fasce	R.O. OEM
30 JET	9570790			**RM39-27841A12**	39-2784112
35	938476			**REC39-817096A6**	39-817096A6
40	9570790			**RM39-27841A12**	39-2784112
40		9973099		**REC39-817096A6**	39-817096A6
45	9248006	9466692		**RM39-27841A12**	39-2784112
50	9248006			**RM39-27841A12**	39-2784112
50		9683054		**REC39-817096A6**	39-817096A6
60		9683054		**REC39-817096A6**	39-817096A6
65		9135824		**REC39-817096A6**	39-817096A6
70		9385910		**REC39-817096A6**	39-817096A6
70	9483121		638-8532-1, 646-818846		39-96170A12
75	9589039	9793576	638-8532-1, 646-818846		39-96170A12
75 3 cyl	9793577			**REC39-822321A12**	39-822321A12
80		9393855		**REC39-817096A6**	39-817096A6
85		9177625		**REC39-817096A6**	39-817096A6
90	9483121	9793576	638-8532-1, 646-818846		39-96170A12
90 3 cyl	9793577			**REC39-822321A12**	39-822321A12
100	953034	9793576	638-8532-1, 646-818846		39-96170A12
105 JET	0D082000			**REC39-93481A12**	39-93481A12
115	5829464	5829463		**REC39-817096A6**	39-817096A6
115	9559771	9793576	638-8532-1, 646-818846		39-96170A12
115 4 cyl	9793577			**REC39-822321A12**	39-822321A12
125		43253111		**REC39-817096A6**	39-817096A6
135		3293233		**REC39-817096A6**	39-817096A6
140	4865678	350805		**REC39-817096A6**	39-817096A6
150		5327662		**REC39-817096A6**	39-817096A6
V135	0A904646	0D819999	636-8118, 644-818141	**REC39-93481A12**	39-93481A12
V135	0D820000			**REC39-93481A12**	39-93481A12
V150	0A904646	0D819999	636-8118, 644-818141	**REC39-93481A12**	39-93481A12
XR4, MAGII	0C239553	0D081999			39-18487A12
V150	0D820000			**REC39-93481A12**	39-93481A12
V175	4301235	6618750		**REC39-93481A12**	39-93481A12
V175	805887			**REC39-93481A12**	39-93481A12
V175	6618751	0C239552		**REC39-813011A12**	39-813011A12
V175	0C239553	0D081999			39-18487A12
V200	4839034	6073191		**REC39-813011A12**	39-813011A12
V200	8061595	8065672		**REC39-813011A12**	39-813011A12
V200	6073197	0C291519		**REC39-813011A12**	39-813011A12
V200 LASER	0B117316			**REC39-813011A12**	39-813011A12
V225 2.4L	5628028			**REC39-813011A12**	39-813011A12

GUÍA COJINETES
BEARINGS APPLICATION
GUIDA CUSCINETTO

HP	AÑO YEAR ANNO	SERIE SERIAL SERIE	COJINETE CENTRAL CENTER BEARING CUSCINETTO CENTRALE	BIELA, PUNTA PEQUEÑA CONNEC. ROD, SAMLL END BIELLA, FINE PICCOLA	BIELA, PUNTA GRANDE CONNEC. ROD, BIG END BIELLA, FINE GRANDE
15 (Marathon Sea Pro)	1997-98	9927000 +			REC31-879877A1
15 (Super)	1994-98	9507381-9855586			REC31-879877A1
15 (Super)	1994-98	9855587 +			REC31-879877A1
18	1980-83	9308306-9378115			REC31-879877A1
18	1980-83	7200763-7207856			REC31-879877A1
18	1983 1/3	9378115-9415100			REC31-879877A1
18 (18XD)	1984-85	9378151-9467987			REC31-879877A1
18 XD	1984-85	9467988 +			REC31-879877A1
20 (20XD) (2-Cyl.)	1986-87	9415101-9467987			REC31-879877A1
20 (20XD) (2-Cyl.)	1986-87	9467988 +			REC31-879877A1
20 (20)	1988-94	9507381 +			REC31-879877A1
20 (20, 20 Jet) (2-Cyl.)	1994-98	9807909-9855586			REC31-879877A1
20 (20, 20 Jet) (2-Cyl.)	1994-98	9855587 +			REC31-879877A1
25	1980-83	9315316-9369470			REC31-879877A1
25 (2-Cyl.)	1983 1/2	9369471-9415100			REC31-879877A1
25 (XD)	1984-87	9415101-9467987			REC31-879877A1
25 (XD)	1988-94	9467988 +			REC31-879877A1
25 (25, 25 Sea Pro, 25 Marathon)	1988-94	9507381-9855586			REC31-879877A1
25 (25, 25 Sea Pro, 25 Marathon)	1994-98	9855587 +			REC31-879877A1
35 (2-Cyl.)	1984-86	9384476 +		REC29-47270	REC31-62596A1
40 (402)	1972-74	3339688-9076838		REC29-47270	REC31-62596A1
40 (402, 40)	1975-77	9076839-9251455		REC29-47270	REC31-62596A1
40 (2-Cyl.)	1980-83	9251456 +		REC29-47270	REC31-62596A1
40 (3-Cyl.)	1997-98	9973100 +		REC29-47270	REC31-17514A2
40 (4-Cyl.)	1989 +	9570790 +	REC29-71422-1		
45 (4-Cyl.)	1986	9248006 +	REC29-71422-1		
50	1976-79	9217256-9248005	REC29-71422-1		
50 (4-Cyl.)	1980-85	9248006 +	REC29-71422-1		
50 (3-Cyl.)	1991-95	9683055-9973099		REC29-47270	REC31-17514A2
50 (3-Cyl.)	1998	9973100 +		REC29-47270	REC31-17514A2
50 (3-Cyl.)	1986-87	9385911-9683054	REC29-71422-1	REC29-47270	REC31-62596A1
55 (3-Cyl.)	1996	9741042-9973099		REC29-47270	REC31-17514A2
55 (3-Cyl.)	1998	9973100 +		REC29-47270	REC31-17514A2
60 (3-Cyl.)	1984-87	9385911-9683054	REC29-71422-1	REC29-47270	REC31-62596A1
60 (3-Cyl.)	1991-95	9683055-9973099		REC29-47270	REC31-17514A2
60 (59 CID) (3-Cyl.)	1998	9973100 +		REC29-47270	REC31-17514A2
65 Jet	1994-98	9793577 +		REC29-818391001	REC31-43012A1
70 (3-Cyl.)	1977-79	9135825-9255130	REC29-71422-1	REC29-47270	REC31-62596A1
70 (3-Cyl.)	1980-83	9255131-9385910	REC29-71422-1	REC29-47270	REC31-62596A1
70 (3-Cyl.) (Biela / Rod / Biella 938-8532-1)	1987	9483121 +		REC29-88258	REC31-43012A1
70 (3-Cyl.) (Biela / Rod / Biella 638-818846)	1987	9483121 +		REC29-818391001	REC31-43012A1
75 (4-Cyl.)	1984-88	9393856 +	REC29-71422-1	REC29-47270	REC31-62596A1
75 (3-Cyl.) (Biela / Rod / Biella 638-8532-1)	1990-93	9589039-9793576		REC29-88258	REC31-43012A1
75 (3-Cyl.) (Biela / Rod / Biella 638-818846)	1990-93	9589039-9793576		REC29-818391001	REC31-43012A1
75 (3-Cyl.)	1994-98	9793577 +		REC29-818391001	REC31-43012A1
80 (80, 800) (4-Cyl.)	1978-79	9177626-9256130	REC29-71422-1	REC29-47270	REC31-62596A1
80 (80) (4-Cyl.)	1980-83	9256131-9393855	REC29-71422-1	REC29-47270	REC31-62596A1
80 (3-Cyl.) (Biela / Rod / Biella 638-8532-1)	1987	9483121-9589038		REC29-88258	REC31-43012A1
80 (3-Cyl.) (Biela / Rod / Biella 646-818846)	1987	9483121-9589038		REC29-818391001	REC31-43012A1
80 Jet	1994-98	9793577 +		REC29-818391001	REC31-43012A1
85 (850) (4-Cyl.)	1973-77	9011604-9053363	REC29-71422-1	REC29-47270	REC31-62596A1
85 (850) (4-Cyl.)	1973-77	9053364-9177625	REC29-71422-1	REC29-47270	REC31-62596A1
90 (3-Cyl.) (Biela / Rod / Biella 638-8532-1)	1987	9483121-9793576		REC29-88258	REC31-43012A1

HP	AÑO YEAR ANNO	SERIE SERIAL SERIE	COJINETE CENTRAL CENTER BEARING CUSCINETTO CENTRALE	BIELA, PUNTA PEQUEÑA CONNEC. ROD, SAMLL END BIELLA, FINE PICCOLA	BIELA, PUNTA GRANDE CONNEC. ROD, BIG END BIELLA, FINE GRANDE
90 (3-Cyl.) (Biela / Rod / Biella 646-818846)	1987	9483121-9793576		**REC29-818391001**	**REC31-43012A1**
90 (90) (3-Cyl.)	1994-98	9793577 +		**REC29-818391001**	**REC31-43012A1**
115 (4-Cyl.) (Biela / Rod / Biella 638-8532-1)	1988-93	9559771 +		**REC29-88258**	**REC31-43012A1**
115 (4-Cyl.) (Biela / Rod / Biella 646-818846)	1989-93	9559771 +		**REC29-818391001**	**REC31-43012A1**
115 (4-Cyl.)	1994-98	9793577 +		**REC29-818391001**	**REC31-43012A1**
125 (4-Cyl.)	1994-98	9793577 +		**REC29-818391001**	**REC31-43012A1**

CIGÜEÑAL
CRANKSHAFT
ALBERO MOTORE

RETENES
OIL SEALS
PARAOLIO

Ref.	R.O. / OEM
REC26-16977	26-16977
REC26-419533	26-41953 3
REC26-43993	26-43993
REC26-66301	26-66301
REC26-56397	26-56397
REC26-66302	26-66302
REC26-859093	26-815449
REC26-830898	26-830898

REC26-859093

REC26-16977

REC26-43993

REC26-66301

REC26-56397

REC26-66302

REC26-830898

REC26-419533

AROS TÓRICOS
O-RINGS
O-RING

Ref.	R.O. / OEM
REC25-20081	25-20081
REC308627	25-20826
REC25-80863	25-20863
REC553126	25-31305
REC25-33465	25-54029
REC25-823683	25-823683
REC25-32546	25-32546
REC25-62700	25-62700
REC25-62706	25-67207
REC335523	25-88955
REC25-90011	25-90011
REC25-89497	25-89497
REC310414	25-47254

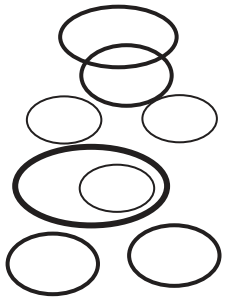

COJINETES
BEARINGS
CUSCINETTO

Ref.	R.O. OEM	Motores Engines Motori
REC31-16756A6	31-16756A6	V135 a / to V200 / XR6
REC30-160494	30-160494	9.9 / 15 / 18 HP International
REC30-16049	30-16049	2 / 2.5 / 3.5 HP 2 T / Strokes / Tempi
		4 / 5 / 6 / 8 / 9.8 HP 4 T / Strokes / Tempi
REC31-816773A2	31-816773A1	20 / 225 / 250 (3.0L) EFI / DFI
REC377139	30-63742T, 30-63742	
REC30-67923T	30-67923T, 30-67923	
REC30-64424T	30-64424T, 30-64424	
REC30-62567T	30-62567T	
REC31-812873A1	31-812873A1	45 JET, 502, 55, 60 (3 Cyl)

REC31-16756A6

REC30-16049
REC30-160494

REC31-816773A2

REC30-64424T

REC30-67923T

REC377139

REC30-62567T

REC31-812873A1

GUÍA CIGÜEÑAL
CRAMKSHAFT GUIDE
GUIDA ALBERO MOTORE

HP	Cyl.	Bel serie / Bel serial / Bel serie	RETENES / OIL SEAL / TENUTE		COJINETE / BEARING / CUSCINETTO
			SUPERIOR / UPPER / SUPERIORE	INFERIOR / LOWER / INFERIORE	SUPERIOR / UPPER / SUPERIORE
2.5HP, 3.5HP		0R131842+			REC30-16049
4 HP		0P401000+	REC26-803514	REC26-8537077	
5 HP		0P073456+	REC26-803514	REC26-8537077	
5 HP		0P073456+	REC26-803514	REC26-8537077	
8HP (209cc)		0P325500+	PAF8-05020001	PAF8-05020001	
8 HP Bodensee		0P086824 - 0P400999	PAF15-07030006	PAF15-07030007	
9.9HP (209cc)		0P325500+	PAF8-05020001	PAF8-05020001	
9.9HP (323cc)		0P075166 - 0P400999	PAF15-07030006	PAF15-07030007	
13.5HP (Intern.)		0P401000+	PAF15-07030006	PAF15-07030007	
15HP		9973100+	PAF15-07030006	PAF15-07030007	
25HP		9973100+	PAF25-05020003	PAF25-05020002	
30HP		0P017000+	PAF25-05020003	PAF25-05020002	
30HP Carb	3	0P153500 - 0P400999	PAF25-05020003	PAF25-05020002	
30HP EFI	3	0P153500 - 0P400999	PAF25-05020003	PAF25-05020002	
40HP		9944807+	PAF25-05020003	PAF25-05020002	
40HP Carb	3	0P153500+	PAF25-05020003	PAF25-05020002	
40HP	4	0P094500 - 0P206999	PAF25-05020003	PAF25-05020002	
40HP EFI	3	0P401000+	PAF25-05020003	PAF25-05020002	
40HP EFI	4	0P153500	PAF25-05020003	PAF25-05020002	
40HP ITALY	4	0P017000 - 0P094499	PAF25-05020003	PAF25-05020002	
45HP Bondesee		0P017000+	PAF25-05020003	PAF25-05020002	
50HP		9944807+	PAF25-05020003	PAF25-05020002	
50HP BIGFOOT		0P017000+	PAF25-05020003	PAF25-05020002	
50HP EFI	4	0P153500+	PAF25-05020003	PAF25-05020002	
50HP	4	0P094500 - 0P206999	PAF25-05020003	PAF25-05020002	
60HP	4	0P094500 - 0P206999	PAF25-05020003	PAF25-05020002	
60HP EFI	4	0P153500+	PAF25-05020003	PAF25-05020002	

GUÍA COJINETES, RETENES Y AROS TÓRICOS
BEARINGS, OIL SEALS & O-RINGS GUIDE
GUIDA CUSCINETTO, TENUTE E FASCE

HP	Cyl.	AÑO / YEAR / ANNO	País / Country / Paese	Bel serie / Bel serial / Bel serie	AROS TÓRICO / O-RINGS / FASCE		RETENES / OIL SEAL / TENUTE		COJINETE / BEARING / CUSCINETTO		
					SUPERIOR / UPPER / SUPERIORE	INFERIOR / LOWER / INFERIORE	SUPERIOR / UPPER / SUPERIORE	INFERIOR / LOWER / INFERIORE	SUPERIOR / UPPER / SUPERIORE	TRANSMISIÓN / TRANSMISSION / TRASMISSIONE	INFERIOR / LOWER / INFERIORE
3.6		1980-82	BEL	9252831 +	REC25-80863			REC26-56397			
4 (40)	1	1972-74	BEL	9000306-9072178	REC25-80863			REC26-56397		REC30-16049	
4	1	1982-86	BEL	9258281 +	REC25-80863			REC26-56397		REC30-16049	
4	1	1987-88	BEL	9477830 +						REC30-16049	
4 (40) (Gnat)	2	1976-79	BEL	9075839-9256980		REC25-62706					
4 (40)	2	1980-81	BEL	9256981 +		REC25-62706					
4.5 (4.5, 45)	1	1975-79	BEL	9072179-9258280	REC25-80863			REC26-56397			
4.5	1	1980-85	BEL	9258281 +	REC25-80863			REC26-56397			
5	1	1987-89	BEL	9477830 +						REC30-16049	
6		1986-93	BEL	9461526 +							
7.5 (7.5, 75)		1974-77	BEL	9043194 +	REC25-80863						
8		1986-93	BEL	9461526 +							
9.8 (9.8) (110)		1974-77	BEL	9041439 +	REC25-80863						
9.9		1986-93	BEL	9461526 +							
10 (XR10)		1990-93	BEL	9596000 +							
10 (Magnum, Sea Pro, Marathon)		1990-93	BEL	9596000 +							
15		1988-93	BEL	9542620 +							
15 (Sea Pro, XD, Marathon)		1997-98	BEL	9927000 +							
15 (Super)		1994-98	BEL	9507381 +							
18 (18, 18 XD)		1980-83	BEL	9308306 +							
20 (200, 20)		1973-77	BEL	9016254-9415100				REC26-66302		REC30-63326T	REC30-63326T

HP	Cyl.	AÑO YEAR ANNO	País Country Paese	Bel serie Bel serial Bel serie	AROS TÓRICO / O-RINGS / FASCE		RETENES / OIL SEAL / TENUTE		COJINETE / BEARING / CUSCINETTO		
					SUPERIOR UPPER SUPERIORE	INFERIOR LOWER INFERIORE	SUPERIOR UPPER SUPERIORE	INFERIOR LOWER INFERIORE	SUPERIOR UPPER SUPERIORE	TRANSMISIÓN TRANSMISSION TRASMISSIONE	INFERIOR LOWER INFERIORE
20 (20, 20XD)		1986-87	BEL	9415101 +							
25 (25, 25XD)	2	1980-83	BEL	9315316 +							
40 (402)	2	1972-74	BEL	3339688-9076838	REC310414		REC764337	REC764337			REC377139
40 (402, 40)	2	1975-77	BEL	9076839 +	REC310414	REC25-823683	REC764337	REC764337			REC377139
40	4	1989 +	BEL	9570790-9793444		REC25-32546	REC26-66301	REC764337		REC377139	REC377139
40	4	1989 +	BEL	9793445 +		REC25-32546	REC764337	REC764337		REC377139	REC377139
40	3	1997-98	BEL	9973100 +		REC25-896523		REC764337			REC377139
45	4	1986	BEL	9248006 +			REC764337	REC764337		REC377139	REC377139
50 (50, 500)	4	1971-74	BEL	9001581 +			REC764337	REC764337		REC377139	REC377139
50	3	1986-87	BEL	9385911-9683054		REC25-32546	REC764337	REC764337	REC30-64424T	REC30-64424T	
50	3	1991-95	BEL	9683055-9973099		REC25-896523		REC764337	REC31-812873A1		REC377139
50	3	1998	BEL	9973100 +		REC25-896523		REC764337			REC377139
55	3	1996	BEL	9683055-9973099		REC25-896523		REC764337	REC31-812873A1		REC377139
55	3	1998	BEL	9973100 +		REC25-896523		REC764337			REC377139
60	3	1984-87	BEL	9385911-9683054		REC25-32546	REC764337	REC764337	REC30-64424T	REC30-64424T	REC30-64424T
60	3	1991-95	BEL	9683055-9973099		REC25-896523	REC26-66301	REC764337	REC31-812873A1		REC377139
65 (650)	3	1973-76	BEL	9020074-9135824	REC310414	REC25-32546	REC764337	REC764337		REC30-64424T	REC30-64424T
70	3	1977-83	BEL	9135825-9385910		REC25-32546	REC764337	REC764337		REC30-64424T	REC30-64424T
70	3	1987	BEL	9483121-9506480	REC25-823683			REC764337	REC31-43013T3		
70	3	1988-89	BEL	9506481 +	REC25-823683	REC25-33465		REC764337	REC31-43013T3		
75	4	1984-88	BEL	9393856 +	REC310414	REC25-32546	REC764337	REC764337		REC30-62567T	REC377139
75	3	1990-93	BEL	9589039 +	REC25-823683			REC764337	REC31-43013T3		
80 (80, 800)	4	1978-79	BEL	9177626-9393855	REC310414	REC25-32546	REC764337	REC764337		REC30-62567T	REC377139
80	3	1987	BEL	9483121-9506480	REC25-823683			REC764337	REC31-43013T3		
80	3	1987	BEL	9506481 +	REC25-823683	REC25-33465		REC764337	REC31-43013T3		
85 (850)	4	1973-77	BEL	9011604-9177625	REC310414	REC25-32546	REC764337	REC764337		REC377139	REC377139
90	3	1987	BEL	9483121 +	REC25-823683			REC764337	REC31-43013T3		
100	4	1988-93	BEL	9523034-0P016999	REC25-823683		REC764337	REC764337	REC31-43013T3		
100 Retén superior redondo Round upper o-ring Tenuta superiore redonda	4	1994-98	BEL	0P017000 +	REC25-823683			REC764337	REC31-43013T3		
100 Retén superior cuadrado Square upper o-ring Tenuta superiore cuadrata	4	1994-98	BEL	0P017000 +				REC764337	REC31-43013T3		
115	4	1988-93	BEL	9559771-0P016999	REC25-823683			REC764337	REC31-43013T3		
115 Retén superior redondo Round upper o-ring Tenuta superiore redonda	4	1988-93	BEL	0P017000 +	REC25-823683			REC764337	REC31-43013T3		
115 Retén superior cuadrado Square upper o-ring Tenuta superiore cuadrata		1988-93	BEL	0P017000 +				REC764337	REC31-43013T3		
125	4	1994-98	BEL	9793577-0P016999	REC25-823683			REC764337	REC31-43013T3		
125 Retén superior redondo Round upper o-ring Tenuta superiore redonda	4	1994-98	BEL	0P017000+	REC25-823683			REC764337	REC31-43013T3		
125 Retén superior cuadrado Square upper o-ring Tenuta superiore cuadrata	4	1994-98	BEL	0P017000 +				REC764337	REC31-43013T3		
V-105 Jet		1996+	USA	0D082000 +	REC25-33465	REC25-62700	REC764337	REC764337	REC31-16756A4		REC30-67923T
V-135 Carb. 1.50 ID Rodamiento superior Upper bearing Cuscinetto superiore		1986-88	USA	0A904646-0C100860	REC25-33465	REC25-62700	REC764337	REC764337	REC31-74248T		REC30-67923T

HP	Cyl.	AÑO YEAR ANNO	País Country Paese	Bel serie Bel serial Bel serie	AROS TÓRICO / O-RINGS / FASCE		RETENES / OIL SEAL / TENUTE		COJINETE / BEARING / CUSCINETTO		
					SUPERIOR UPPER SUPERIORE	INFERIOR LOWER INFERIORE	SUPERIOR UPPER SUPERIORE	INFERIOR LOWER INFERIORE	SUPERIOR UPPER SUPERIORE	TRANSMISIÓN TRANSMISSION TRASMISSIONE	INFERIOR LOWER INFERIORE
V-135 Carb. 1.37 ID Rodamiento superior Upper bearing Cuscinetto superiore		1986-88	USA	0A904646-0C100860	REC25-33465	REC25-62700	REC764337	REC764337			REC30-67923T
V-135 Carb.		1989-90	USA	0C100861+	REC25-33465	REC25-62700	REC764337	REC764337	REC31-16756A4		REC30-67923T
V-135 Carb.		1991	USA	0C239553+	REC25-33465	REC25-62700	REC764337	REC764337	REC31-16756A4		REC30-67923T
V-135 DFI		1998	USA	0G590000+	REC25-33465	REC25-62700	REC764337	REC764337	REC31-16756A4		REC30-67923T
V-140 Jet		1994-95	USA	0D082000+	REC25-33465	REC25-62700	REC764337	REC764337	REC31-16756A4		REC30-67923T
V-150 (V-150 & V-1500) Carb.		1973-77	USA	4868998-0A904645		REC25-62700	REC764337	REC764337	REC31-74248T		REC30-67923T
V-150 Carb. 1.50 ID Rodamiento superior Upper bearing Cuscinetto superiore		1986-88	USA	0A904646-0C100860	REC25-33465	REC25-62700	REC764337	REC764337	REC31-74248T		REC30-67923T
V-150 Carb. 1.37 ID Rodamiento superior Upper bearing Cuscinetto superiore		1986-88	USA	0A904646-0C100860	REC25-33465	REC25-62700	REC764337	REC764337			REC30-67923T
V-150 Carb.		1989-90	USA	0C100861-0C239552	REC25-33465	REC25-62700	REC764337	REC764337			REC30-67923T
V-150 XR4, Magnum II		1988	USA	0B242885-0C239552	REC25-33465	REC25-62700	REC764337	REC764337			REC30-67923T
V-150 Carb.		1991	USA	0C239553+	REC25-33465	REC25-62700	REC764337	REC764337	REC31-16756A4		REC30-67923T
V-150 XR4, 6/Mag II, III		1991	USA	0C239553+	REC25-33465	REC25-62700	REC764337	REC764337	REC31-16756A4		REC30-67923T
V-150 EFI		1993-95	USA	0D082000+	REC25-33465	REC25-62700	REC764337	REC764337	REC31-16756A4		REC30-67923T
V-150 DFI		1998	USA	0G590000+	REC25-33465	REC25-62700	REC764337	REC764337	REC31-16756A4		REC30-67923T
V-175 (V-175, 1750) Carb.		1976-79	USA	4301235-5393736		REC25-89497	REC764337	REC764337	REC31-74248T		REC30-67923T
V-175 (V-175, 1750) Carb.		1976-79	AUS	8058870-8064249		REC25-89497	REC764337	REC764337	REC31-74248T		REC30-67923T
V-175 Carb.		1980-81	USA	5393737-6618750			REC764337	REC764337	REC31-74248T		REC30-67923T
V-175 Carb.		1980-81	AUS	8064250+			REC764337	REC764337	REC31-74248T		REC30-67923T
V-175 Carb.		1985-88	USA	6618751-0C239552	REC25-62706	REC25-62700	REC764337	REC764337			REC30-67923T
V-175 Carb.		1991	USA	0C239553+	REC25-33465	REC25-62700	REC764337	REC764337	REC31-16756A4		REC30-67923T
V-175 EFI		1991	USA	0D000750+	REC25-33465	REC25-62700	REC764337	REC764337	REC31-16756A4		REC30-67923T
V-200 (V-200, 2000) Carb.		1978-79	USA	4839034-05363917		REC25-89497	REC764337	REC764337	REC31-74248T		REC30-67923T
V-200 Carb.		1980-81	USA	05363918-6073191			REC764337	REC764337	REC31-74248T		REC30-67923T
V-200 Carb.		1980-81	AUS	8061595-8065672			REC764337	REC764337	REC31-74248T		REC30-67923T
V-200 Carb.		1982-90	USA	6073192-0C291519	REC25-33465	REC25-62700	REC764337	REC764337			REC30-67923T
V-200 Carb.		1991	USA	0C291520+	REC25-33465	REC25-62700	REC764337	REC764337	REC31-16756A4		REC30-67923T
V-200 EFI		1989-90	USA	0C100861-0C291519	REC25-33465	REC25-62700	REC764337	REC764337			REC30-67923T
V-200 EFI		1991	USA	0C291520+	REC25-33465	REC25-62700	REC764337	REC764337	REC31-16756A4		REC30-67923T
V-200 DFI		1997	USA	0G386496+	REC25-823683	REC25-62700	REC26-830898	REC26-830898	REC31-816773A2		REC30-67923T
V-200 Laser		1987-88	USA	0B117316+	REC25-33465	REC25-62700	REC764337	REC764337			REC30-67923T
V-225 (2.4L)		1980-81	USA	5628028+		REC25-62700	REC764337	REC764337			REC30-67923T
V-225(3.0L)Carb. Sea Pro,Marathon		1994-98	USA	0G245605-0G303045	REC25-823683	REC25-62700		REC26-859093	REC31-816773A2		REC30-67923T
V-225(3.0L)Carb. Sea Pro,Marathon		1994-98	USA	0G303046+	REC25-823683	REC25-62700	REC26-830898	REC26-830898	REC31-816773A2		REC30-67923T
V-225 DFI		1998	USA	0G590000+	REC25-823683	REC25-62700	REC26-830898	REC26-830898	REC31-816773A2		REC30-67923T
V-225 EFI		1995-98	USA	0G129222-0G303045	REC25-823683	REC25-62700		REC26-859093	REC31-816773A2		REC30-67923T
V-225 EFI		1995-98	USA	0G303046+	REC25-823683	REC25-62700	REC26-830898	REC26-830898	REC31-816773A2		REC30-67923T
V-250 Carb.		1989-94	USA	0C101891+	REC25-823683	REC335523					
V-250 Carb. Montaje de rodamiento superior Upper bearing fitting Montaggio cuscinetto superiore		1989-94	USA	0C101891+	REC25-823683	REC335523			REC31-816773A2		
V-250 EFI		1995-98	USA	0G129222-0G303045	REC25-823683	REC25-62700		REC26-859093	REC31-816773A2		REC30-67923T
V-250 EFI		1995-98	USA	0G303046+	REC25-823683	REC25-62700	REC26-830898	REC26-830898	REC31-816773A2		REC30-67923T
V-275 Carb.		1989-94	USA	0C101891+	REC25-823683	REC335523					
V-275 Carb. Montaje de rodamiento superior Upper bearing fitting Montaggio cuscinetto superiore		1989-94	USA	0C101891+	REC25-823683	REC335523			REC31-816773A2		
V-300 / 3.4L		1980-87	USA	5611648+	REC25-823683	REC335523					

JUNTA DE CULATA
GASKET CYLINDER HEAD
GUARNIZIONE TESTATA

4 TIEMPOS / STROKES — JUNTA DE CULATA / GASKET CYLINDER HEAD / GUARNIZIONE TESTATA

Ref.	R.O. / OEM
REC27-803508	27-803508

MOTORES / ENGINES / MOTORI
4, 5, 6 HP (1 cyl)

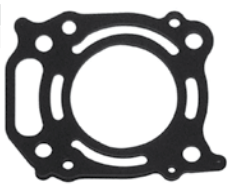

Ref.	R.O. / OEM
REC6G8-11181-A1	27-8254821

MOTORES / ENGINES / MOTORI
8 HP (232cc)
9.9HP
(2 cyl)

Ref.	R.O. / OEM
PAF15-07000100	27-850836

MOTORES / ENGINES / MOTORI
8 HP (232cc)
9.9HP (323cc)
13.5, 15HP (2 cyl)

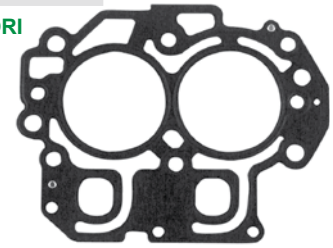

Ref.	R.O. / OEM
PAF8-05000100	27-850836001

MOTORES / ENGINES / MOTORI
8, 9.9 HP (209cc)

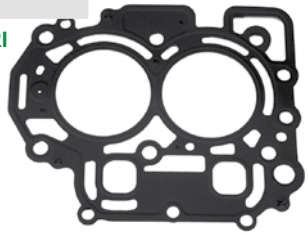

Ref.	R.O. / OEM
PAF25-05040000	8M0049885, 27-830270

MOTORES / ENGINES / MOTORI
25 HP

NEW

Ref.	R.O. / OEM
REC67C-11181-01	27-834777

MOTORES / ENGINES / MOTORI
30, 30EFI, 40, 40EFI HP (3cyl)

Ref.	R.O. / OEM
REC8M0045278	27-8M0045278, 27-857081

MOTORES / ENGINES / MOTORI
40, 40EFI, 50, 50EFI, 60, 60EFI HP (L4-cyl)

Ref.	R.O. / OEM
REC27-825032	27-825032

MOTORES / ENGINES / MOTORI
40, 45, 50 HP

Ref.	R.O. / OEM
REC67F-11181-03	27-8041151

MOTORES / ENGINES / MOTORI
70, 90, 115EFI HP (L4-cyl)

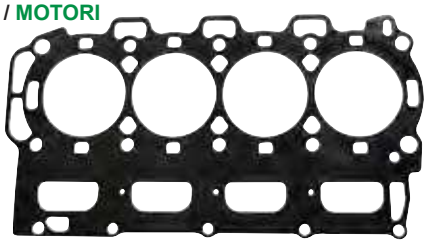

Ref.	R.O. / OEM
RM27-8M0024565	27-8M0024565

NEW

MOTORES / ENGINES / MOTORI
Verado (4 cyl)
75 / 80 / 90 /100 / 115 EFI

Ref.	R.O./ OEM
RM27-8M0033476	27-895374006, 8M0024564

NEW

MOTORES / ENGINES / MOTORI
Verado 6 Cyl

Ref.	R.O. / OEM
REC69J-11181-03	27-887848

MOTORES / ENGINES / MOTORI
225 HP EFI Estribor / Stribord / Tribordo

Ref.	R.O. / OEM
REC69J-11182-03	27-887848-1

MOTORES / ENGINES / MOTORI
225 HP EFI (3.2L) Babor / Port / Babordo

2 TIEMPOS STROKES — JUNTA DE CULATA / GASKET CYLINDER HEAD / GUARNIZIONE TESTATA

Ref.	R.O.
REC309-01005-2	27-95299001

NEW

MOTORES / ENGINES / MOTORI
2.5 HP
3.3 & 3 HP
2 & 2.2M

Ref.	R.O.
REC3B2-01005-0	27-803663021

NEW

MOTORES / ENGINES / MOTORI
6, 8, 9.8 HP (2 Cyl International)

Ref.	R.O. / OEM
REC677-11181-A0	27-95595M

NEW

MOTORES / ENGINES / MOTORI
8K / W8

Ref.	R.O.
REC351-01005-0	27-803663018

NEW

MOTORES / ENGINES / MOTORI
9.9 HP (2 Cyl International)

Ref.	R.O. / OEM
REC6E7-11181-00	27-18937M

NEW

MOTORES / ENGINES / MOTORI
15C-K, W15, 9.9C

Ref.	R.O.
REC350-01005-0	27-803663

NEW

MOTORES / ENGINES / MOTORI
15, 18 HP (2 Cyl International)

Ref.	R.O.
REC346-01005-0	27-8129391

NEW

MOTORES / ENGINES / MOTORI
25, 30 HP (2 Cyl International)

Ref.	R.O. / OEM
REC689-11181-00	27-19138M

NEW

MOTORES / ENGINES / MOTORI
30A / W30

Ref.	R.O.
REC3C8-01005-4	27-8M0062091
	27-81293910

NEW

MOTORES / ENGINES / MOTORI
40 (International)
40 (MXL SEAPRO)

Ref.	R.O. OEM	Dimensiones Dimensions Dimensione	Ø	Ø Piston Piston Ø Ø Pistone
REC27-96542-1	27-96542-1	14-3/4" x 4-5/8"	3-1/4"	3.125"
	27-96281T01			

MOTORES / ENGINES / MOTORI
V6 2.0L (1976-90) Loopcharged
Utilizar con biela nº. 636-8118.
Use with rod no. 636-8118.
Utilizzare con biella nº. 636-8118.

Ref.	R.O. OEM	Dimensiones Dimensions Dimensione	Ø	Ø Piston Piston Ø Ø Pistone
REC27-18785T	27-18785T	14-3/4" x 4-7/8"	3-1/4"	3.125"

MOTORES / ENGINES / MOTORI
V6 2.0L (1992-00) Loopcharged
Utilizar con biela nº. 644-818141.
Use with rod no. 644-818141.
Utilizzare con biella nº. 644-818141.

Ref.	R.O. OEM	Dimensiones Dimensions Dimensione	Ø	Ø Piston Piston Ø Ø Pistone
REC27-822844T04	27-822844T04	14-3/4" x 4-15/16"	3-1/2"	3.501"

MOTORES / ENGINES / MOTORI
V6 2.0L (1978-00) Loopcharged

Ref.	R.O. OEM	Dimensiones Dimensions Dimensione	Ø	Ø Piston Piston Ø Ø Pistone
REC27-79583-1	27-79583-1	14-5/8" x 4-5/8"	3-3/16"	3.125"

MOTORES / ENGINES / MOTORI
V6 2.0L (1976-98) Loopcharged

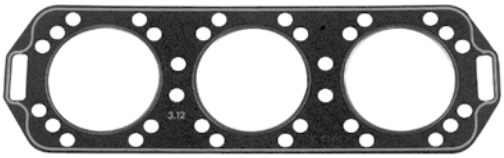

Ref.	R.O. OEM	Dimensiones Dimensions Dimensione	Ø	Ø Piston Piston Ø Ø Pistone
REC27-41246-1	27-41246-1	14-3/4" x 4-11/16"	3-1/2"	3.375"

MOTORES / ENGINES / MOTORI
V6 2.4L (1978-98) Loopcharged

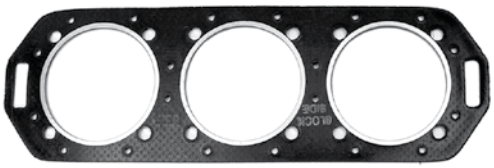

Ref.	R.O. OEM	Dimensiones Dimensions Dimensione	Ø	Ø Piston Piston Ø Ø Pistone
REC27-418786T	27-18786T	14-3/4" x 4-7/8"	3-1/2"	3.375"

MOTORES / ENGINES / MOTORI
V6 2.4L (1978-98) Loopcharged
Pistón para / piston for / pistone per: XR4,
Magnum II, 175

Ref.	R.O. OEM	Dimensiones Dimensions Dimensione	Ø	Ø Piston Piston Ø Ø Pistone
REC27-41245-1	27-41245-1	14-3/4" x 4-3/4"	3-1/2"	3.375"

MOTORES / ENGINES / MOTORI
V6 2.4L (1978-88) Loopcharged
Pistón para / piston for / pistone per: 200, 2000.

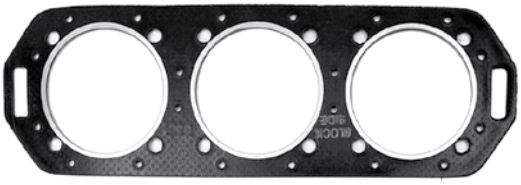

4 STROKES TIEMPOS
KIT JUNTAS
GASKET KITS
KIT GUARNIZIONI

Ref.	R.O. / OEM
REC6G8-W0001-A3	27-825847A95

NEW

MOTORES / ENGINES / MOTORI
8 Bodensee (Inter.)
9.9 HP (232 cc)

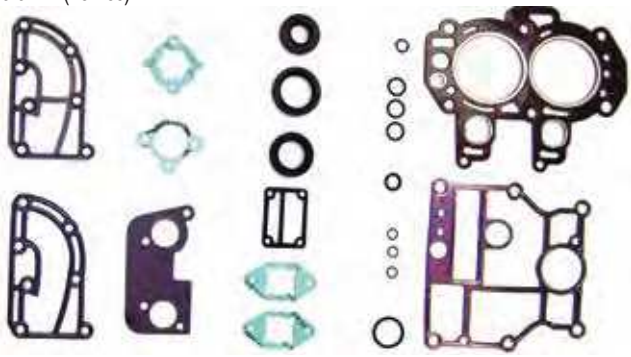

Ref.	R.O. / OEM
REC3V1-87121-0	27-835427A04

NEW

MOTORES / ENGINES / MOTORI
8, 9.9 HP (209 cc)

Ref.	R.O. / OEM
REC65W-W0001-00	27-830270A98

NEW

MOTORES / ENGINES / MOTORI
25 HP

Ref.	R.O. OEM
REC67C-W0001-01	825231A02

NEW

MOTORES / ENGINES / MOTORI
OP153500-OP400999
30, 40HP (3 Cyl)

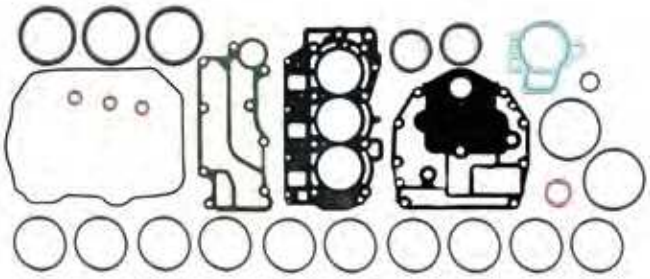

Ref.	R.O. OEM
REC6P2-W0001-01	27-887810A04

NEW

MOTORES / ENGINES / MOTORI
OT807876 - 1B055687
225 EFI (4 T/ 4 Stroke / 4 tempi)

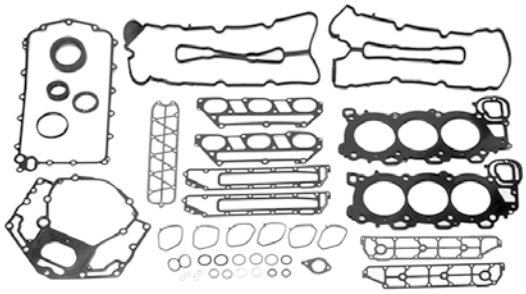

Ref.	R.O./ OEM
RM27-896142A07	27-896142A06, A07

NEW

MOTORES / ENGINES / MOTORI
Verado (4 Cyl)

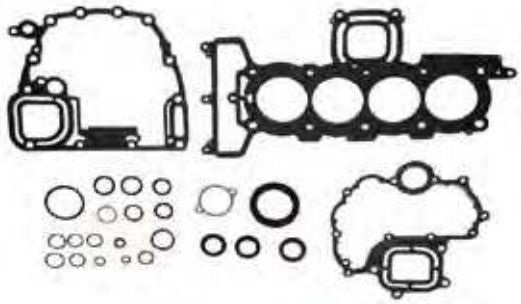

Ref.	R.O./ OEM
RM27-880552A07	27-880552A07, A06

NEW

MOTORES / ENGINES / MOTORI
Verado (6 Cyl)

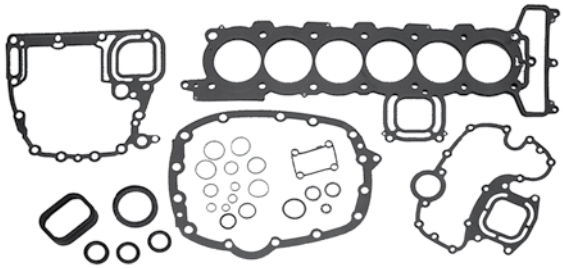

2 STROKES TIEMPOS
KIT JUNTAS
GASKET KITS
KIT GUARNIZIONI

Ref.	R.O. / OEM
REC27-42364A92	27-42364A92

MOTORES / ENGINES / MOTORI
6 / 8 / 9.9 HP
XR10
10 VIKING / SEAPRO
15, 15 SEAPRO / VIKING
10 MAGNUM

Ref.	R.O. / OEM
REC27-41499A87	27-41499A87

MOTORES / ENGINES / MOTORI
15 SEAPRO (XD)
18 XD / 20 XD (2 cyl)
20 JET / 20 (2 cyl)
25, 25 SEAPRO, 25 XD
SUPER 15 (2 cyl)
15 Marathon XD

Ref.	R.O. / OEM
REC27-85491A90	27-85491A90

MOTORES / ENGINES / MOTORI
30 JET
40 (4 cyl)

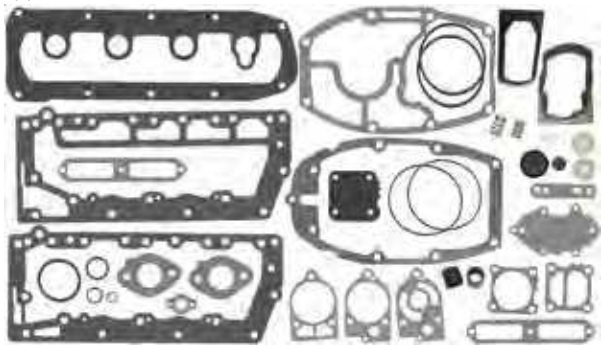

Ref.	R.O. / OEM
REC27-822420A94	27-822420A94

NEW

MOTORES / ENGINES / MOTORI
30 / 40 (2 Cyl)
30 (9854537+)
40 (985437+)

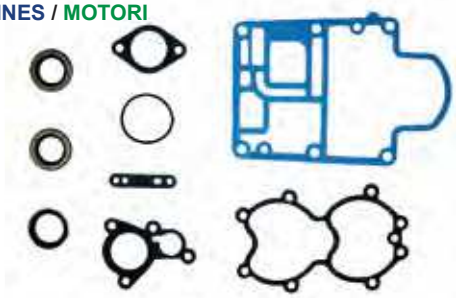

Ref.	R.O. / OEM
REC27-828553A97	27-828553A97

MOTORES / ENGINES / MOTORI
30 JET (3 cyl)
40 / 50 (3 cyl)

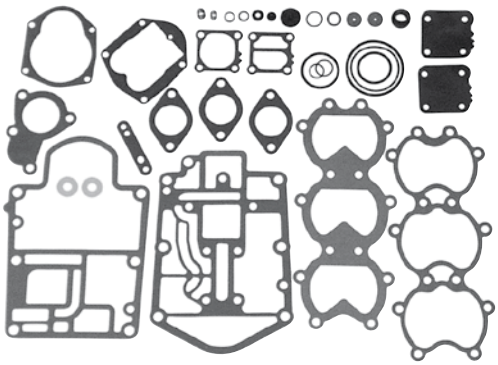

Ref.	R.O. / OEM
REC27-78028A78	27-78028A78

MOTORES / ENGINES / MOTORI
35 HP (2 Cyl)
402, 40 HP (2 cyl)

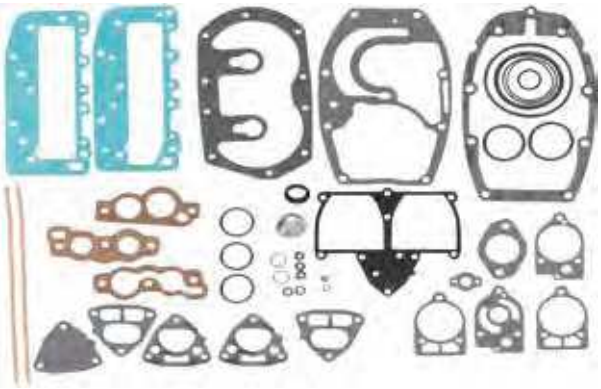

Ref.	R.O. / OEM
REC27-812867A97	27-812867A97

MOTORES / ENGINES / MOTORI
40/45 JET
50/55 (3 cyl)
60 (3 cyl) Bigfoot

Ref.	R.O. / OEM
REC27-72486A32	27-72486A32

MOTORES / ENGINES / MOTORI
45 / 50 HP (4 Cyl)

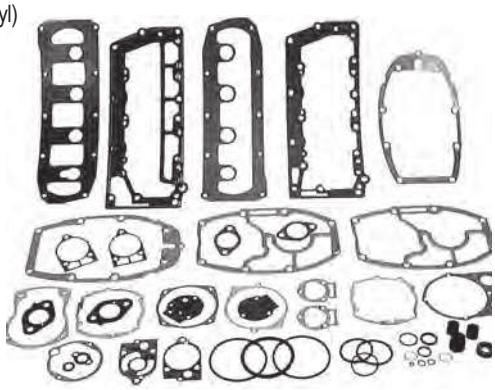

Ref.	R.O. / OEM
REC27-88449A32	27-88449A32

MOTORES / ENGINES / MOTORI
50, 60, 70 (3 cyl)

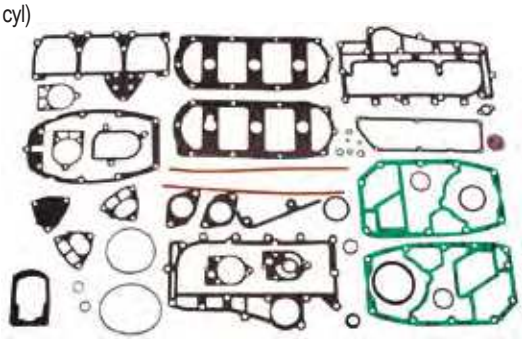

Ref.	R.O. / OEM
REC27-43779A87	27-43779A87

MOTORES / ENGINES / MOTORI
50 / 60 (3 cyl)

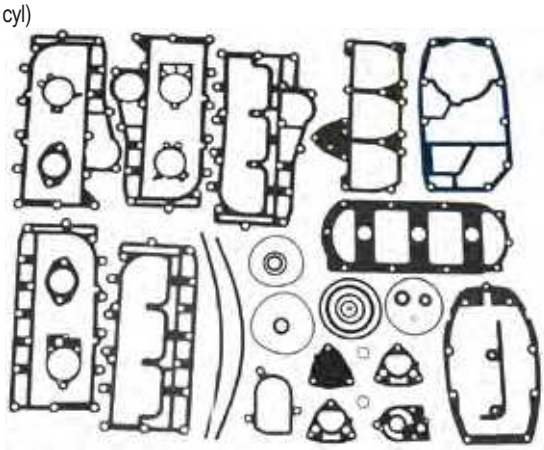

Ref.	R.O. / OEM
REC27-43004A99	27-43004A99

MOTORES / ENGINES / MOTORI
65 JET
65 JET (3 cyl)
75 / 90 (3 cyl)

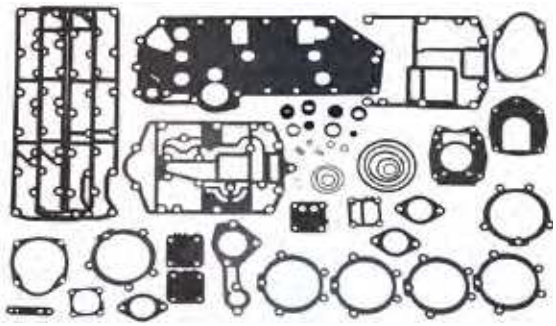

Ref.	R.O. / OEM
REC27-13461A99	27-13461A99

MOTORES / ENGINES / MOTORI
65 / 80 HP JET
75 / 90 HP (3 cyl)
100 / 115 / 125 HP (4 cyl)

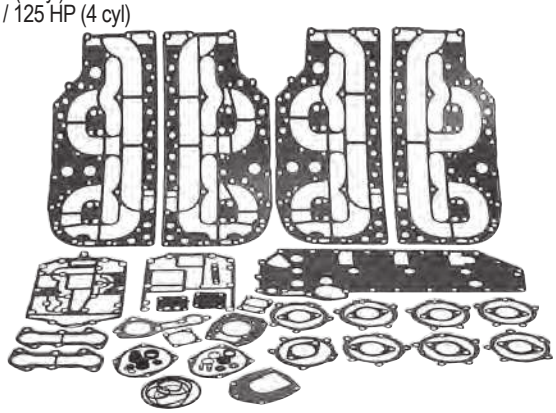

Ref.	R.O. / OEM
REC27-73645A87	27-73645A87

MOTORES / ENGINES / MOTORI
75 (4 cyl)

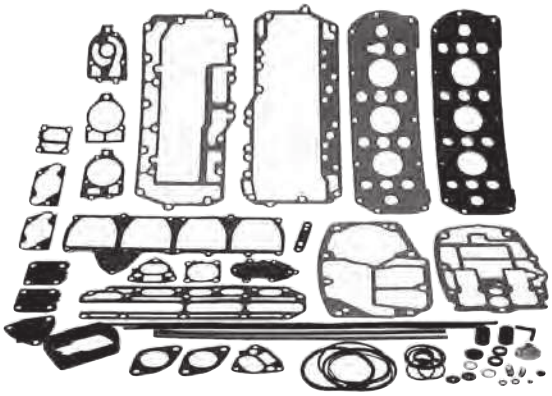

Ref.	R.O. / OEM
REC27-85653A87	27-85653A87

MOTORES / ENGINES / MOTORI
90 & 115 (6 Cyl. en línea / In line / In linea)

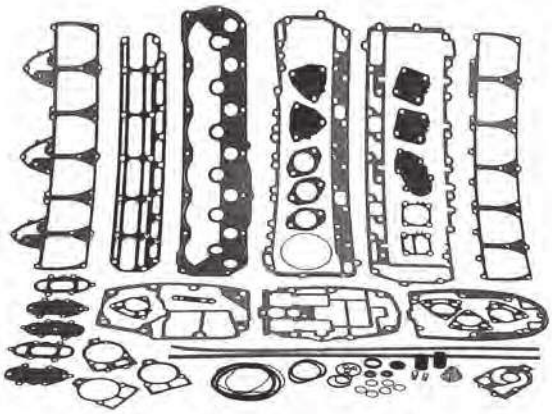

Ref.	R.O. / OEM
REC27-815791A92	27-815791A92

MOTORES / ENGINES / MOTORI
105 / 140 JET
V-135
V-150 (XR/EFI)
V-175 (XR/EFI)
V-200 (XR/EFI)
XR-6

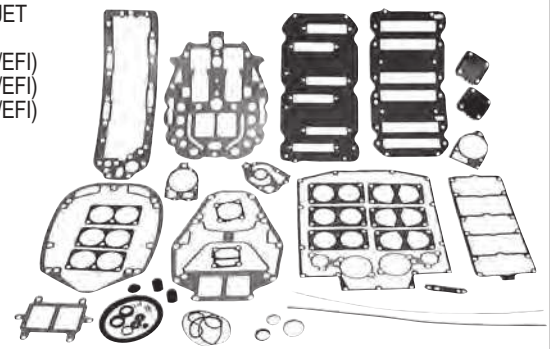

Ref.	R.O. / OEM
REC27-814754A00	27-814754A00

MOTORES / ENGINES / MOTORI
110 JET
150 / 175 PROXS
V-135 (DFI)
V-150 (DFI)
V-175 (DFI)
2.5L

No incluye JUNTA CULATA.
HEAD GASKET not included.
Non include GUARNIZIONE TESTATA.

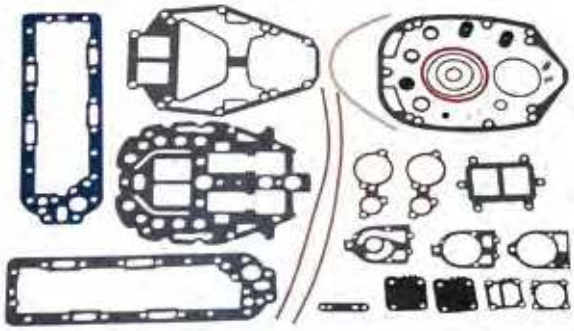

Ref.	R.O. / OEM
REC27-90484A88	27-90484A88

MOTORES / ENGINES / MOTORI
V-135
V-150 (Mag / Marathon Work / XR-2)
V-1500

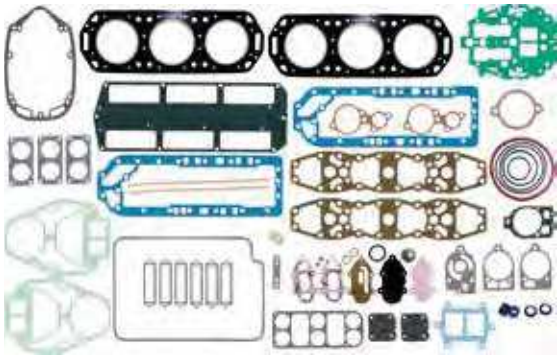

Ref.	R.O. / OEM
REC27-14697A87	27-14697A87

MOTORES / ENGINES / MOTORI
V-175 (SKI)
V-200 (EFI)
V-220

Ref.	R.O. / OEM
REC27-11338A88	27-11338A88

MOTORES / ENGINES / MOTORI
V-175
XR-4
Magnum II

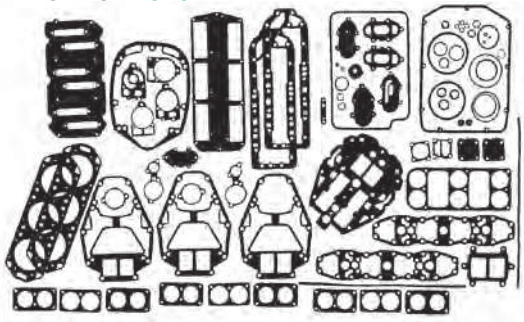

Ref.	R.O. / OEM
REC27-832934A00	27-832934A00

MOTORES / ENGINES / MOTORI
200 (DFI 7 EFI)
200 PRO XS
225 (EFI/DFI)
225 SEAPRO
250 (DFI/EFI)
3.0L modelos / models / modelli

No incluye ARO de junta de culata.
Cylinder head O-RING not included.
Non include O-RING guarnizione testata.

Ref.	R.O. / OEM
REC27-89221A88	27-89221A88

MOTORES / ENGINES / MOTORI
V-200

Ref.	R.O. / OEM
REC27-79583A81	27-79583A81

MOTORES / ENGINES / MOTORI
V-1500 / V-150 (Mag / Marathon Work / XR-2)
V-175

No incluye JUNTA CULATA.
HEAD GASKET not included.
Non include GUARNIZIONE TESTATA.

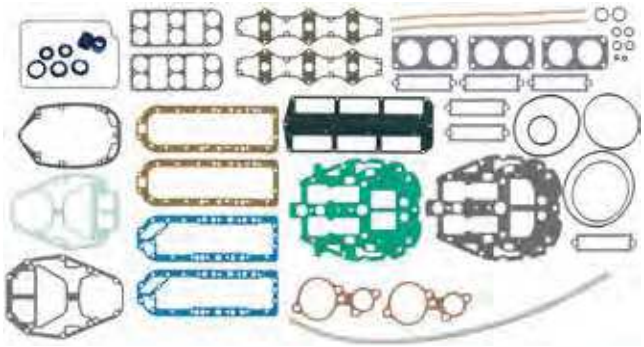

GUÍA JUNTAS CULATA
GASKET CYLINDER GUIDE
GUIDA GUARNIZIONE TESTATA

4 STROKES TIEMPOS

HP	Nº SERIE SERIAL NUM. Nº DI SERIE	CYL.	JUNTA CULATA HEAD GASKET GUARN. TESTA	KIT JUNTAS SUPERIOR MOTOR GASKET KIT POWER HEAD KIT GUARNIZIONE SUPERIORE MOTORE	JUNTA BASE BASE GASKET GUARN. BASE
4HP	0P037456 +	1	REC27-803508		
5HP	0P037456 +	1	REC27-803508		
6HP	0P037456 +	1	REC27-803508		
8HP (209cc)	0P325500 +	2	PAF8-05000100	REC3V1-87121-0	PAF8-00000004
8HP (Bodensee) USA(232 cc)	0H000058 +	2	REC6G8-11181-A1	REC6G8-W0001-A3	REC6G8-11351-A0
8HP (Bodensee)	0P086824 - 0P400999	2	PAF15-07000100	REC66M-W0001-01	PAF15-00000014
8HP (Bodensee) USA(232 cc)	0H000058 +	2	REC6G8-11181-A1	REC6G8-W0001-A3	REC6G8-11351-A0
9.9HP (209cc)	0P325500 +	2	PAF8-05000100	REC3V1-87121-0	PAF8-00000004
9.9HP (323cc)	0P075166 - 0P400999	2	PAF15-07000100	REC66M-W0001-01	PAF15-00000014
13.5HP (International)	0P134638 +	2	PAF15-07000100	REC66M-W0001-01	PAF15-00000014
15HP	0P9973100 +	2	PAF15-07000100	REC66M-W0001-01	PAF15-00000014
25HP	0P9973100 +	2	PAF25-05040000	REC65W-W0001-00	PAF25-00000013
30HP	0P017000 +	3	REC67C-11181-01	REC67C-W0001-01	REC67C-11351-00
30HP (Carb) & (EFI)	0P153500 - 0P400999	3	REC67C-11181-01	REC67C-W0001-01	REC67C-11351-00
40HP	0P0170000 - 0P153499	3	REC67C-11181-01	REC67C-W0001-01	REC67C-11351-00
40HP (Carb)	0P153500 +	3	REC67C-11181-01	REC67C-W0001-01	REC67C-11351-00
40HP (EFI)	0P401000 +	3	REC67C-11181-01	REC67C-W0001-01	REC67C-11351-00
40HP (EFI)	0P153500 +	4	REC8M0045278		REC67C-11351-00
40HP	9944807 - 0P016999	4	REC27-825032		REC67C-11351-00
40HP	OP094500 - 0P206999	4	REC8M0045278		REC67C-11351-00
40HP (Italy)	0P017000 - 0P094499	4	REC27-825032		REC67C-11351-00
45HP (Bodensee)	0P017000 +	4	REC27-825032		REC67C-11351-00
50HP (Bigfoot)	0P9944807 +	4	REC27-825032		REC67C-11351-00
50HP (EFI)	0P153500 +	4	REC8M0045278		REC67C-11351-00
50HP	OP094500 - 0P206999	4	REC8M0045278		REC67C-11351-00
60HP (EFI)	0P153500 +	4	REC8M0045278		REC67C-11351-00
60HP	OP094500 - 0P206999	4	REC8M0045278		REC67C-11351-00
75HP (Bodensee)	0G960500 +	4	REC67F-11181-03	RM858732T02	REC68V-11351-00
75HP (EFI)	1B172291 - 1B366822	4	REC67F-11181-03	RM858732T02	REC68V-11351-00
80HP (EFI)	1B227000 - 1B366822	4	REC67F-11181-03	RM858732T02	REC68V-11351-00
90HP (4 Stroke)	0G960500 +	4	REC67F-11181-03	RM858732T02	REC68V-11351-00
90HP (EFI)	1B172291 - 1B366822	4	REC67F-11181-03	RM858732T02	REC68V-11351-00
100HP (EFI)	1B227000 - 1B366822	4	REC67F-11181-03	RM858732T02	REC68V-11351-00
115HP (EFI)	0T178500 - 1B366822	4	REC67F-11181-03	RM858732T02	REC68V-11351-00
75/80/90/100 & 115 (EFI)	1B494360 +	4	RM27-8M0024565		
135 (VERADO)	OP419487 +	4	RM27-8M0024565	RM27-896142A07	
150 (VERADO)	OP419487 +	4	RM27-8M0024565	RM27-896142A07	
175 (VERADO)	OP419487 +	4	RM27-8M0024565	RM27-896142A07	
200 (VERADO)	OP514869 +	4	RM27-8M0024565	RM27-896142A07	
200HP (VERADO)	0P520553 +	6	RM27-8M0033476	RM27-880552A07	
225HP (VERADO)	0P409357 +	6	RM27-8M0033476	RM27-880552A07	
225HP (EFI)	0T653945 +	V6	REC69J-11181-03 REC69J-11182-03	REC6P2-W0001-01	REC69J-11351-11
250HP (VERADO)	0P409357 +	6	RM27-8M0033476	RM27-880552A07	
275HP (VERADO)	0P464488 +	6	RM27-8M0033476	RM27-880552A07	
300HP (VERADO)	0P520553 +	6	RM27-8M0033476	RM27-880552A07	
350HP (VERADO)	2B141617 +	6	RM27-8M0033476	RM27-880552A07	
400HP (VERADO)	2B141124 +	6	RM27-8M0033476	RM27-880552A07	

GUÍA JUNTAS CULATA
GASKET CYLINDER GUIDE
GUIDA GUARNIZIONE TESTATA

2 STROKES TIEMPOS

HP	AÑO YEAR ANNO	PAÍS COUNT. PAESE	Nº SERIE SERIAL NUM. Nº DI SERIE	KIT JUNTAS GASKET SET KIT GUARN.	JUNTA CULATA HEAD GASKET GUARN. TESTA
6	1986-93	USA	0A197112-0T800749	REC27-42364A92	
6	1986-93	BEL	9461526+	REC27-42364A92	
8	1986-93	USA	0A197112+	REC27-42364A92	
8	1986-93	BEL	9461526+	REC27-42364A92	
9.9	1986-93	USA	0A197112+	REC27-42364A92	
9.9	1986-93	BEL	9461526+	REC27-42364A92	
10 Marathon XR10, Sea Pro	1990-93	USA	0D038000+	REC27-42364A92	
10 Marathon XR10, Sea Pro	1990-93	BEL	9596000+	REC27-42364A92	
10 Magnum / Marathon	1990-98	USA	0D038000+	REC27-42364A92	
10 Magnum / Marathon	1990-98	BEL	9596000+	REC27-42364A92	
15	1988-93	USA	0B292414+	REC27-42364A92	
15	1988-93	BEL	9542620+	REC27-42364A92	
15 XD Sea Pro / Marathon	1997-98	BEL	9927000+	REC27-41499A87	
15 (Super)	1994-98	USA	0B238464+	REC27-41499A87	
15 (Super)	1994-98	BEL	9507381+	REC27-41499A87	

HP	AÑO YEAR ANNO	PAÍS COUNT. PAESE	Nº SERIE SERIAL NUM. Nº DI SERIE	KIT JUNTAS GASKET SET KIT GUARN.	JUNTA CULATA HEAD GASKET GUARN. TESTA
15 (Super)	1994-98	CAN	0A730007+	**REC27-41499A87**	
18 (18 XD)	1983 1/2	USA	6416713-6443972	**REC27-41499A87**	
18 (18 XD)	1983 1/3	BEL	9378116-7209532	**REC27-41499A87**	
18 (18 XD)	1984-85	CAN	7207858-7209532	**REC27-41499A87**	
20 (20, 20XD, 200)	1986-87	USA	6443973+	**REC27-41499A87**	
20 (20, 20XD, 200)	1986-87	BEL	9415101+	**REC27-41499A87**	
20 (20, 20XD, 200)	1986-87	CAN	7209533+	**REC27-41499A87**	
20 Jet	1994-98	USA	0G044027+	**REC27-41499A87**	
20 Jet	1994-98	BEL	9807909+	**REC27-41499A87**	
25 (25, 25XD)	1984-87	USA	6416713-0T979999	**REC27-41499A87**	
25 (25, 25XD)	1983 1/2	BEL	9378116-0P325499	**REC27-41499A87**	
25 (25, 25XD)	1983 1/2	CAN	7207858+	**REC27-41499A87**	
30 Jet (40HP) (4-Cyl.)	1994-97	USA	0C159200+	**REC27-85491A90**	
30 Jet (40HP) (4-Cyl.)	1998	BEL	9570790+	**REC27-85491A90**	
35 (2-Cyl.)	1984-86	USA	6445653-0B110788	**REC27-78028A78**	
35 (2-Cyl.)	1984-86	BEL	9384476-9466646	**REC27-78028A78**	
35 (2-Cyl.)	1984-86	CAN	7209608+	**REC27-78028A78**	
40 (40, 402) (2-Cyl.)	1972-74	USA	3336258-0G053313	**REC27-78028A78**	
40 (40, 402) (2-Cyl.)	1972-74	AUS	8002335+	**REC27-78028A78**	
40 (40, 402) (2-Cyl.)	1972-74	BEL	3339688+	**REC27-78028A78**	
40 (2-Cyl.)	1972-74	CAN	3340783+	**REC27-78028A78**	
40 (4-Cyl.)	1989+	USA	0C159200+	**REC27-85491A90**	
40 (4-Cyl.)	1989+	BEL	9570790+	**REC27-85491A90**	
45 (4-Cyl.)	1986	USA	5531630-0B110788	**REC27-72486A32**	
45 (4-Cyl.)	1986	AUS	8063985+	**REC27-72486A32**	
45 (4-Cyl.)	1986	BEL	9248006-9466691	**REC27-72486A32**	
45 (4-Cyl.)	1986	CAN	7143688-0A719280	**REC27-72486A32**	
45 (4-Cyl.)	1987-89	USA	0B110789+	**REC27-85491A90**	
45 (4-Cyl.)	1987-89	BEL	9466692+	**REC27-85491A90**	
45 (4-Cyl.)	1987-89	CAN	0A719281+	**REC27-85491A90**	
50 (500) (4-Cyl.)	1965-67	USA	2116318+	**REC27-72486A32**	
50 (500) (4-Cyl.)	1965-67	CAN	2097445+	**REC27-72486A32**	
50 (500) (4-Cyl.)	1965-67	AUS	2863739+	**REC27-72486A32**	
50 (500) (4-Cyl.)	1965-67	BEL	9001581+	**REC27-72486A32**	
50 (3-Cyl.)	1986-87	USA	6428681-0B122929	**REC27-88449A32**	
50 (3-Cyl.)	1986-87	BEL	9385911-9469199	**REC27-88449A32**	
50 (3-Cyl.)	1986-87	CAN	7208333-0A721307	**REC27-88449A32**	
50 (3-Cyl.)	1986-87	USA	0B122930-0D000749	**REC27-43779A87**	
50 (3-Cyl.)	1986-87	BEL	9469200-9683054	**REC27-43779A87**	
50 (3-Cyl.)	1986-87	CAN	0A721308+	**REC27-43779A87**	
55 (3-Cyl.)	1984-87	USA	6428681-0B122929	**REC27-88449A32**	
55 (3-Cyl.)	1984-87	BEL	9385911-9469199	**REC27-88449A32**	
55 (3-Cyl.)	1984-87	CAN	7208333-0A721307	**REC27-88449A32**	
55 (3-Cyl.)	1988-90	USA	0B122930-0D000749	**REC27-43779A87**	
55 (3-Cyl.)	1988-90	BEL	9469200-9683054	**REC27-43779A87**	
55 (3-Cyl.)	1988-90	CAN	0A721308+	**REC27-43779A87**	
60 (3-Cyl.)	1984-87	USA	6428681-0B122929	**REC27-88449A32**	
60 (3-Cyl.)	1984-87	BEL	9385911-9469199	**REC27-88449A32**	
60 (3-Cyl.)	1984-87	CAN	7208333-0A721307	**REC27-88449A32**	
60 (3-Cyl.)	1988-90	USA	0B122930-0D000749	**REC27-43779A87**	
60 (3-Cyl.)	1988-90	BEL	9469200-9683054	**REC27-43779A87**	
60 (3-Cyl.)	1988-90	CAN	0A721308+	**REC27-43779A87**	
65 (650) (3-Cyl.)	1976	USA	4382057-4571651	**REC27-88449A32**	
65 (650) (3-Cyl.)	1976	BEL	9112989-9135824	**REC27-88449A32**	
65 (650) (3-Cyl.)	1976	CAN	7073473-7087822	**REC27-88449A32**	
70 (3-Cyl.)	1977-79	USA	4571652-0A996141	**REC27-88449A32**	
70 (3-Cyl.)	1977-79	AUS	8042350+	**REC27-88449A32**	
70 (3-Cyl.)	1977-79	BEL	9135825-9385910	**REC27-88449A32**	
70 (3-Cyl.)	1977-79	CAN	7087823-7208332	**REC27-88449A32**	
70 (3-Cyl.)	1987	USA	0A996142+	**REC27-43004A99**	
70 (3-Cyl.)	1987	BEL	9483121+	**REC27-43004A99**	
75 (4-Cyl.)	1984-88	USA	6432901+	**REC27-73645A87**	
75 (4-Cyl.)	1984-88	BEL	9393856+	**REC27-73645A87**	
75 (4-Cyl.)	1984-88	CAN	7208573+	**REC27-73645A87**	
80 (80, 800) (4-Cyl.)	1978-79	USA	4831999-6432900	**REC27-73645A87**	
80 (80, 800) (4-Cyl.)	1978-79	AUS	8050200+	**REC27-73645A87**	
80 (80, 800) (4-Cyl.)	1978-79	BEL	9177626-9393855	**REC27-73645A87**	

HP	AÑO YEAR ANNO	PAÍS COUNT. PAESE	Nº SERIE SERIAL NUM. Nº DI SERIE	KIT JUNTAS GASKET SET KIT GUARN.	JUNTA CULATA HEAD GASKET GUARN. TESTA
80 (80, 800) (4-Cyl.)	1978-79	CAN	7110998-7208572	REC27-73645A87	
80 (3-Cyl.)	1987	USA	0A996142+	REC27-43004A99	
80 (3-Cyl.)	1987	BEL	9483121+	REC27-43004A99	
80 Jet (4-Cyl.)	1994-98	USA	0D283222+	REC27-13461A99	
80 Jet (4-Cyl.)	1994-98	BEL	9793577+	REC27-13461A99	
90 (90, 900) (6-Cyl.)	1978-79	USA	4845301+	REC27-85653A87	
90 (90, 900) (6-Cyl.)	1978-79	CAN	7111698+	REC27-85653A87	
90 (90) (6-Cyl.)	1980-83	AUS	8060545+	REC27-85653A87	
90 (3-Cyl.)	1987	USA	0A996142+	REC27-43004A99	
90 (3-Cyl.)	1987	BEL	9483121+	REC27-43004A99	
100 (4-Cyl.)	1988-98	USA	0B209468+	REC27-13461A99	
100 (4-Cyl.)	1988-98	BEL	9523034+	REC27-13461A99	
105 Jet (V6)	1996+	USA	0D082000+	REC27-815791A92	REC27-18785T
115 (1150, 115) (6-Cyl.)	1973-79	USA	3525441+	REC27-85653A87	
115 (1150, 115) (6-Cyl.)	1973-79	AUS	8008665+	REC27-85653A87	
115 (1150, 115)	1978-79	CAN	7112248+	REC27-85653A87	
115 (4-Cyl.)	1988-93	USA	0C100000+	REC27-13461A99	
115 (4-Cyl.)	1988-93	BEL	9559771+	REC27-13461A99	
125 (4-Cyl.)	1994-98	USA	0D283222+	REC27-13461A99	
125 (4-Cyl.)	1994-98	BEL	9793577+	REC27-13461A99	
140 (140, 1400) (6-Cyl.)	1972	USA	3293234-3502805	REC27-85653A87	
140 (140, 1400) (6-Cyl.)	1978-79	USA	4865678+	REC27-85653A87	
140 (140, 1400) (6-Cyl.)	1978-79	AUS	8052650+	REC27-85653A87	
140 (140, 1400) (6-Cyl.)	1978-79	CAN	7112773+	REC27-85653A87	
150 (1500) (6-Cyl.)	1973-78	USA	3502806-5327662	REC27-85653A87	
150 (1500) (6-Cyl.)	1973-78	AUS	8005615-8052649	REC27-85653A87	
150 (1500) (6-Cyl.)	1973-77	CAN	7010533-7112772	REC27-85653A87	
V-135	1986-88	USA	0A904646-0C239552	REC27-90484A88	REC27-96542-1
V-135	1991	USA	0C239553-0G960499	REC27-815791A92	REC27-18785T
V-135	1996-98	USA	0G960500-0T178499		REC27-18785T
V-135 DFI	1992-95	USA	0C590000-0G960499	REC27-814754A00	
V-135 DFI	1998	USA	0G960500+	REC27-814754A00	
V-140 Jet	1996-98	USA	0D082000-0G960499	REC27-815791A92	REC27-822844T04
V-150 (150, 1500)	1973-77	USA	4868998-6042945	REC27-79583A81	REC27-79583-1
V-150	1982-90	USA	6042946-0C239552	REC27-90484A88	REC27-96542-1
V-150	1988-91	USA	0C239553-0G960499	REC27-815791A92	REC27-18785T
V-150	1996-98	USA	0G960500+	REC27-814754A00	
V-150 (XR4 / Magnum II)	1988	USA	0B242885-0C239552	REC27-11338A88	REC27-41246-1
V-150 (XR4)	1991	USA	0C239553-0D081999	REC27-815791A92	REC27-418786T
V-150 (XR6 / Magnum III)	1992-95	USA	0D082000-0G960499	REC27-815791A92	REC27-822844T04
V-150 (XR6 / Magnum III)	1996-98	USA	0G960500+	REC27-814754A00	
V-150 EFI	1993-98	USA	0D082000-0G960499	REC27-815791A92	REC27-822844T04
V-150 DFI	1998	USA	0D590000-0G960499	REC27-814754A00	
V-150 DFI	1998	USA	0G960500+	REC27-814754A00	
V-175 (175, 1750)	1976-81	USA	4301235-6618750	REC27-79583A81	REC27-79583-1
V-175 (175, 1750)	1976-79	AUS	8058870+	REC27-79583A81	REC27-79583-1
V-175	1985-88	USA	6618751-0C239552	REC27-11338A88	REC27-41246-1
V-175	1991	USA	0C239553-0D081999	REC27-815791A92	REC27-418786T
V-175	1992-95	USA	0D082000-0G960499	REC27-815791A92	REC27-822844T04
V-175 EFI	1992-95	USA	0D000750-0D081999	REC27-815791A92	REC27-418786T
V-175 EFI	1992-95	USA	0D082000-0G960499	REC27-815791A92	REC27-822844T04
V-175 EFI	1992-98	USA	0T178500+	REC27-814754A00	
V-200 (200, 2000)	1978-79	USA	4839034-6073191		REC27-41245-1
V-200 (200, 2000)	1980-81	AUS	8061595-8065672		REC27-41245-1
V-200	1982	USA	6073192-6203990		REC27-41245-1
V-200	1983	USA	6203991-0C291519	REC27-89221A88	REC27-41246-1
V-200	1991	USA	0C291520-0D081999	REC27-815791A92	REC27-822844T04
V-200	1992-95	USA	0D082000 +	REC27-815791A92	REC27-822844T04
V-200 EFI	1989-90	USA	0C100861-0C291519	REC27-14697A87	REC27-41246-1
V-200 EFI	1991	USA	0C291520-0G960499	REC27-815791A92	REC27-822844T04
V-220	1987-88	USA	0B117316+	REC27-14697A87	REC27-41246-1
V-225	1980-81	USA	5628028+		REC27-41245-1
V-225 EFI (3.0L) (1)	1995-98	USA	0G129222-0T408999		REC69J-11181-03
V-225 EFI (3.0L) (1)	1995-98	USA	0T409000-0T598999		REC69J-11181-03
V-225 EFI (3.0L) (1)	1995-98	USA	0T599000+		REC69J-11181-03

RETENES ACEITE
OIL SEALS
PARAOLIO

REF	R.O. OEM	EJE SHAFT ASSE	CALIBRE BORE
REC26-12224	26-12224	1.1875	1.6875
REC26-12709	26-12709	0.5000	0.6875
REC26-76868	26-14077	2.0000	2.6875
REC26-14240	26-14240	3.7500	4.5000
REC26-16977	26-16977	0.8750	1.2500
REC26-807006	26-18816	1.6750	2.2500
REC908855	26-20070	0.6250	1.0000
REC26-24590	26-24590	0.4062	0.5625
REC26-30913	26-30913	0.5000	0.8750
REC26-32511	26-32511	1.2500	2.0000
REC26-55682	26-32911	1.0000	1.2500
REC26-33467	26-33467	0.6250	1.1250
REC764337	26-41953	1.1875	1.8750
REC26-43036	26-43036	1.0469	1.4688
REC26-43993	26-43943		
REC26-45587	26-45587	0.3906	0.6250
REC26-55682	26-55682	1.0000	1.2500
REC26-56397	26-56397	0.7500	1.1250
REC320961	26-56788	0.8750	1.2500
REC26-62818	26-62818	1.6250	2.2500
REC26-823894	26-68493	2.2500	3.0000
REC26-69188	26-69188	0.8750	1.2500
REC26-69189	26-69189	0.8750	1.3125
REC26-70081	26-70081	1.1875	1.7500
REC26-72785	26-72785	0.8125	1.8750
REC26-76868	26-76868	1.1875	1.6875
REC26-79831	26-79831	0.7500	0.7500
REC26-8164641	26-816464	0.3750	2.2500
REC26-821092	26-821092	1.5000	0.7500
REC26-00173	26-85107		
REC26-70080	26-89236	0.3750	1.5000
REC26-89238	26-89238	0.8750	1.2500
REC26-90562	26-90562	0.7500	1.5000
REC26-94038	26-94038	1.0000	0.8750
REC26-897153	26-90063	0.4375	1.3750
REC26-90562	26-90562		
REC26-965031	26-96503	0.8750	1.1250

RETENES TAPA CULATA
GASKET CYLINDER SEALS
PARAOLIO COPERCHIO TESTATA

Ref.	R.O. / OEM
REC81554	858452-1

MOTORES / ENGINES / MOTORI
V6 2.5L (1998+)

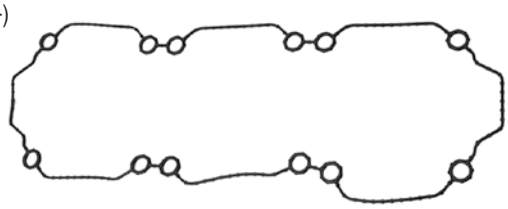

Ref.	R.O. / OEM
REC818574	818574

MOTORES / ENGINES / MOTORI
V6 3.0L (1998+)

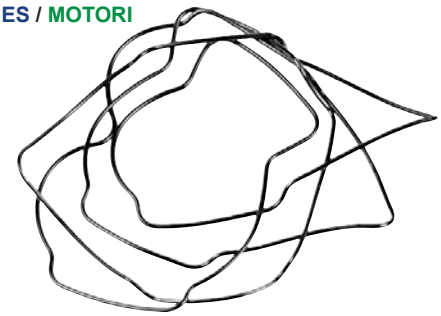

Ref.	R.O. / OEM
PAF8-05000002	27-803508017

NEW

MOTORES / ENGINES / MOTORI
(4T / 4 Stroke / 4 Tempi)
8, 9.9HP (209cc)

Ref.	R.O. / OEM
PAF15-07050002	850837

NEW

MOTORES / ENGINES / MOTORI
(4T / 4 Stroke / 4 Tempi)
8 Bodensee
9.9 HP
13.5 HP
15 HP

Ref.	R.O. / OEM
PAF25-05000004	25-833103

NEW

MOTORES / ENGINES / MOTORI
25HP (4T / 4 Stroke / 4 Tempi)

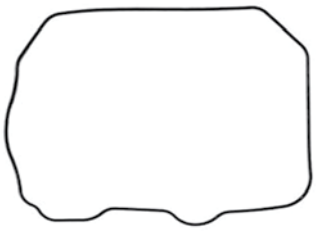

Ref.	R.O. / OEM
REC67C-11356-00	25-854341

NEW

MOTORES / ENGINES / MOTORI
30 -40 HP (4T / 4 Stroke / 4 Tempi) CARB & EFI

AROS TÓRICOS CULATA
CYLINDER HEAD O-RINGS
O-RING TESTATA

Ref.	R.O. / OEM	Motores / Engines / Motori
REC25-818573	25-818573	3.0 L Antiguos / Early / Vecchio
REC8597721	859772-1	V6 2.5L

4 TIEMPOS / 4 STROKES
JUNTA BASE MOTOR
GASKET CYLINDER
GUARNIZIONI BASE MOTORI

Ref.	R.O.
PAF8-00000004	27-835427003

MOTORES / ENGINES / MOTORI
8 HP (4T / 4 Stroke / 4 Tempi) (209cc)
9.9 HP (4T / 4 Stroke / 4 Tempi) (209cc)

NEW

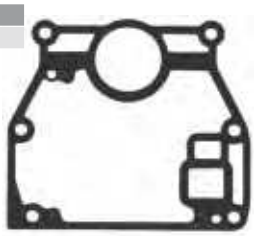

Ref.	R.O.
REC6G8-11351-A0	27-825847

MOTORES / ENGINES / MOTORI
8 (Bodensee) Inter. (4T / 4 Stroke / 4 Tempi)
9.9 (232 cc) (4T / 4 Stroke / 4 Tempi)

NEW

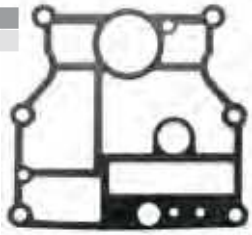

Ref.	R.O.
PAF15-00000014	27-8354272

MOTORES / ENGINES / MOTORI
8 (Bondensee) Inter.
9.9 (323 cc)
13.5 Inter.
15

NEW

Ref.	R.O.
PAF25-00000013	27-8M0069692
	8252312

MOTORES / ENGINES / MOTORI
25 HP (4T / 4 Stroke / 4 Tempi)

NEW

Ref.	R.O.
REC67C-11351-00	892319001
	27-859352

MOTORES / ENGINES / MOTORI
30 - 60 HP (Carb) EFI (4T / 4 Stroke / 4 Tempi)

NEW

Ref.	R.O.
REC68V-11351-00	27-8587321

NEW

MOTORES / ENGINES / MOTORI
75 (Bodensee)
90
115 EFI

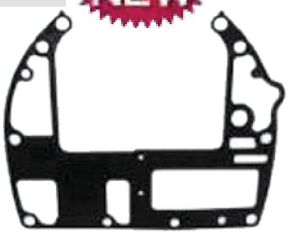

Ref.	R.O.
REC69J-11351-11	27-887810011

MOTORES / ENGINES / MOTORI
225 EFI (4T / 4 Stroke / 4 Tempi) (2003-06)

2 TIEMPOS / 2 STROKES
JUNTA BASE MOTOR
GASKET CYLINDER
GUARNIZIONI BASE MOTORI

Ref.	R.O.
REC6E0-45113-A1	27-91780M

NEW

MOTORES / ENGINES / MOTORI
4A/5C (1977-89)

Ref.	R.O.
REC27-89937	27-89937

MOTORES / ENGINES / MOTORI
4.5 / 9.8 HP (1970-86)

Ref.	R.O.
REC6G1-45113-A1	11560M

NEW

MOTORES / ENGINES / MOTORI
6C
8C
(1978-86)

Ref.	R.O.
REC682-11351-A0	27-96602M

NEW

MOTORES / ENGINES / MOTORI
9.9C
15C, K, W15
(1979-86)

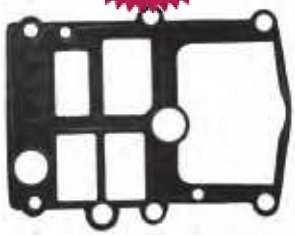

Ref.	R.O.
REC27-41670006	27-41670-3

MOTORES / ENGINES / MOTORI
20 Jet
20 / 25 (2 cyl)
(2005-06)

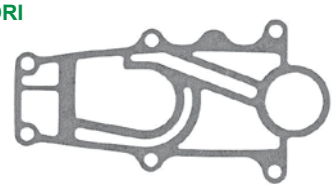

Ref.	R.O.
REC61T-45113-A0	27-84775

NEW

MOTORES / ENGINES / MOTORI
20C (Thru prop)
25C (Thru prop)
25K
30a
W30 (w/Marathon)
(1977-98)

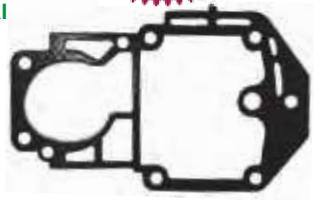

Ref.	R.O.
REC27-796501	27-79650-1

MOTORES / ENGINES / MOTORI
30 Jet
40/45 HP (4 cyl)

Ref.	R.O.
REC8M0000822	828553

NEW

MOTORES / ENGINES / MOTORI
30 / 40 HP (2cyl)
30 / 40 / 45 Jet
40 / 50 / 60 (3 cyl)
(1994-10)

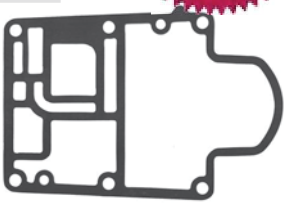

Ref.	R.O.
REC27-628601	27-62860-1

MOTORES / ENGINES / MOTORI
35/40/402 (2 cyl) (1972-89)

Ref.	R.O.
REC6F5-45113-A0	27-11885

MOTORES / ENGINES / MOTORI
K40 HP
W40 (w/Marathon)
(1989-98)

NEW

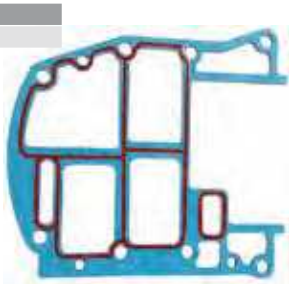

Ref.	R.O.
REC27-884511	27-88451-1

MOTORES / ENGINES / MOTORI
50/60/70 HP (3cyl) (1980-90)

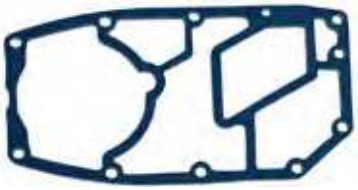

Ref.	R.O.
REC696-45113-00	27-16717M

MOTORES / ENGINES / MOTORI
55/ W55
(1984-89)

NEW

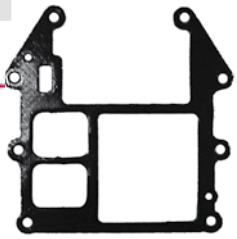

Ref.	R.O.
REC27-430075	27-43007-3

MOTORES / ENGINES / MOTORI
65 / 80 Jet
100 / 115/ 125 (4 cyl)
75 / 90 (3 cyl)
75 / 90 / 115 DFI (3 cyl) (1.5 L)

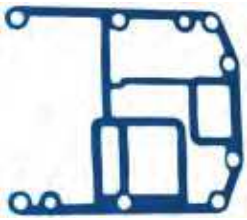

Ref.	R.O.
REC826549	27-826549

MOTORES / ENGINES / MOTORI
75-120 HP (1995-99)

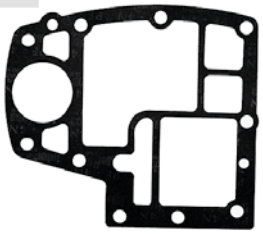

Ref.	R.O.
REC823700	27-823700-2

MOTORES / ENGINES / MOTORI
90-120 HP Jet Drive (1993-00)

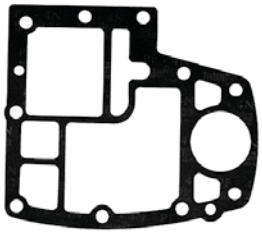

Ref.	R.O.
REC27-991764	27-99176-3

MOTORES / ENGINES / MOTORI
110/140 Jet (2.5L)
150/175 Pro X5 (2.5L)
135-200 HP (V-Models)
(1976-10)

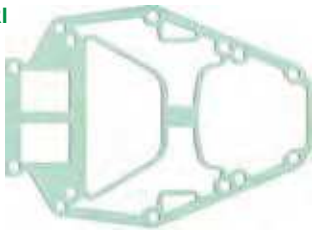

Ref.	R.O.
REC27-991772	27-99177-2

MOTORES / ENGINES / MOTORI
135-200 HP (V-Models)
XR-4
(1976-90)

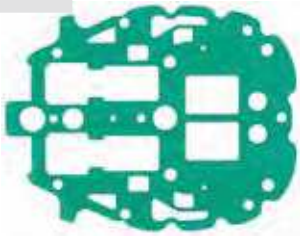

Ref.	R.O.
REC27-997761	27-99776-1

MOTORES / ENGINES / MOTORI
135-175 HP (V-Models)
(1976-93)

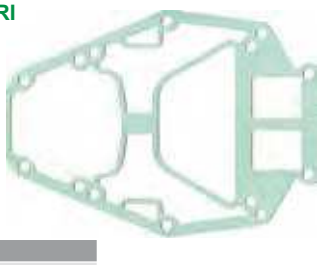

Ref.	R.O.
REC27-8231422	27-78069

MOTORES / ENGINES / MOTORI
150-225 HP (V-Models) (1978-88)

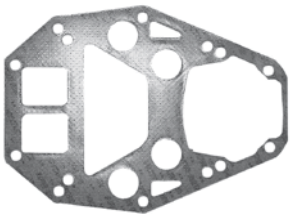

Ref.	R.O.
REC27-75909	27-75909

MOTORES / ENGINES / MOTORI
V-175 (1976-88)
Merc Formula (2 L EFI / CARB)

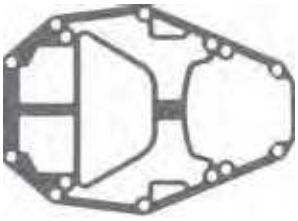

Ref.	R.O.
REC813932	27-813932-2

MOTORES / ENGINES / MOTORI
200-250 HP (3.0L) (DFI, CARB, EFI)
(1994-98)

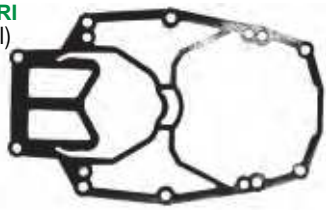

Ref.	R.O.
REC27-39401	27-39401

MOTORES / ENGINES / MOTORI
200 / 20 HP (1970-80)

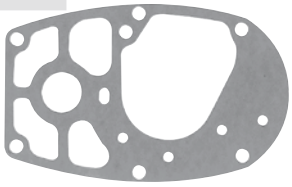

JUNTAS TAPA REFIRGERACIÓN
GASKETS, EXHAUST INNER COVER
GUARNIZIONE COPERCHIO REFRIGERAZIONE

Ref.	R.O.
REC6E0-41112-A1	27-99995M

MOTORES / ENGINES / MOTORI
4A (1981-89)

NEW

Ref.	R.O.
REC6E0-41114-A1	21-41279M, 99993M

MOTORES / ENGINES / MOTORI
5C
4A
(1977-89)

NEW

Ref.	R.O.
REC6G1-41112-A1	27-11456M

NEW

MOTORES / ENGINES / MOTORI
6C/D
8C
(1978-86)

Ref.	R.O.
REC6G1-11193-A1	27-11454M

NEW

MOTORES / ENGINES / MOTORI
6C/D
8D
(1978-86)

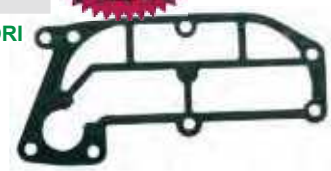

Ref.	R.O.
REC27-62386001	27-62386

MOTORES / ENGINES / MOTORI
6-25 HP (1972-10)

Ref.	R.O.
PAF8-05010004	27-834952001

NEW

MOTORES / ENGINES / MOTORI
8, 9.9HP (209cc) (4T / 4 Stroke / 4 Tempi)

Ref.	R.O.
PAF15-07010018	834952002

NEW

MOTORES / ENGINES / MOTORI
(4T / 4 Stroke / 4 Tempi)
8 Bodensee
9.9 HP
13.5 HP
15 HP

Ref.	R.O.
REC682-41114-00	27-83951M

NEW

MOTORES / ENGINES / MOTORI
9.9C
15C, K
W15
(1979-86)

Ref.	R.O.
REC27-25848	27-25848

MOTORES / ENGINES / MOTORI
10-350 HP (1970-86)

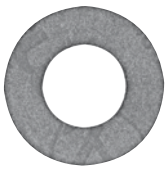

Ref.	R.O.
REC664-41114-A0	27-81570M

NEW

MOTORES / ENGINES / MOTORI
20C (Thru prop. exhaust)
25C (Thru prop. exhaust)
28
(1977-88)

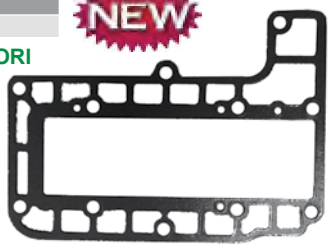

Ref.	R.O.
PAF25-05010111	27-830298

NEW

MOTORES / ENGINES / MOTORI
(4T / 4 Stroke / 4 Tempi)
25 HP

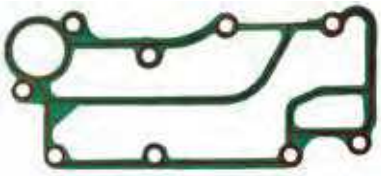

Ref.	R.O.
REC12-38453	12-38453

MOTORES / ENGINES / MOTORI
30-70 HP (1970-97)

Ref.	R.O.
REC27-854913	27-85491-2

MOTORES / ENGINES / MOTORI
30-50 HP (1980-97)

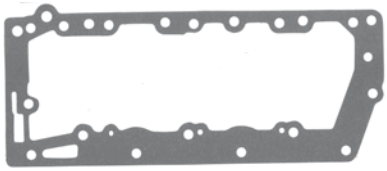

Ref.	R.O.
REC689-41112-A0	27-96656M

NEW

MOTORES / ENGINES / MOTORI
30A
W30 (w/Marathon)
(1977-92)

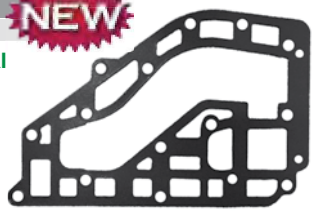

Ref.	R.O.
REC689-41114-A0	27-84741M

NEW

MOTORES / ENGINES / MOTORI
30A
W30 (w/Marathon)
(1977-92)

Ref.	R.O.
REC6E9-41114-A0	27-827176M

NEW

MOTORES / ENGINES / MOTORI
40 (Twin Carb) (con inyección de aceite / with oil injection / con iniezione dell'olio)
(1986-92)

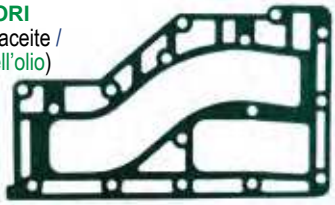

Ref.	R.O.
REC676-41112-A0	27-83338M

NEW

MOTORES / ENGINES / MOTORI
40 (Twin Carb)
40A, B, C
(1977-92)

Ref.	R.O.
REC663-41114-00	27-81331M

NEW

MOTORES / ENGINES / MOTORI
40, W-48
55, W-55
60 (2 cyl)
(1977-89)

Ref.	R.O.
REC27-430057	27-430057

MOTORES / ENGINES / MOTORI
75, 90 HP (3 cyl)

Ref.	R.O.
REC887825	27-887825

MOTORES / ENGINES / MOTORI
225 EFI (4 T / 4 Strokes / 4 Tempi)
(2003-06)

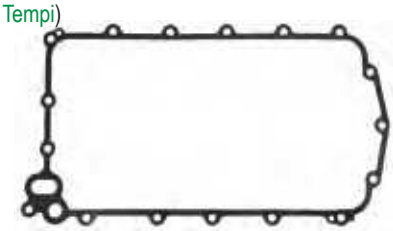

JUNTAS ADMISIÓN
GASKET, INTAKE
GUARNIZIONE SISTEMA ASPIRAZIONE

Ref.	R.O.
PAGB/T3452.1-35.5x1.	25-825057003

NEW

MOTORES / ENGINES / MOTORI
2.5 / 3.5 HP (4 T / 4 Strokes / 4 Tempi)
8 HP (4 T / 4 Strokes / 4 Tempi) (209cc)
9.9 HP (4 T / 4 Strokes / 4 Tempi) (209cc)

Ref.	R.O.
REC27-76636	27-76636

MOTORES / ENGINES / MOTORI
V6
150-200 HP
(1976-88)

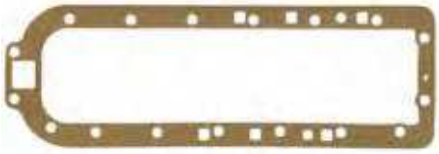

Ref.	R.O.
REC27-78690002	27-78690

MOTORES / ENGINES / MOTORI
V6
110-200 HP (2000-10)

Ref.	R.O.
REC27-677511	27-67751-1

MOTORES / ENGINES / MOTORI
V6
100-225 HP (1976-98)

Ref.	R.O.
REC27-935361	27-93536-1

MOTORES / ENGINES / MOTORI
V6
135-200 HP (1976-90)

Ref.	R.O.
PAF15-07000007	25-853525

NEW

MOTORES / ENGINES / MOTORI
8 HP Bodensee (4 T / 4 Strokes / 4 Tempi)
9.9 HP (4 T / 4 Strokes / 4 Tempi) (323cc)
13.5 HP (4 T / 4 Strokes / 4 Tempi) (Int.)
15 HP (4 T / 4 Strokes / 4 Tempi)

Ref.	R.O.
PAF8-05000009	27-853525001

NEW

MOTORES / ENGINES / MOTORI
8 & 9.9 HP
(4 T / 4 Strokes / 4 Tempi)
(209cc)

Ref.	R.O.
PAF15-07000017	27-835383001

NEW

MOTORES / ENGINES / MOTORI
8 & 9.9 HP
(4 T / 4 Strokes / 4 Tempi)
(209cc)

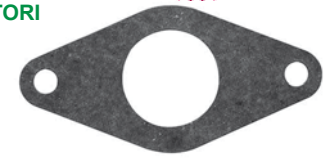

Ref.	R.O.
PAGB3452.1-82	25-8250572

NEW

MOTORES / ENGINES / MOTORI
8-60 HP (4 T / Strokes / Tempi)

Ref.	R.O.
REC27-25849	27-25849

MOTORES / ENGINES / MOTORI
10-115 HP (1-6 cyl) (1970-85)

Ref.	R.O.
REC27-31402	27-31402

MOTORES / ENGINES / MOTORI
10-95 HP (1970-75)

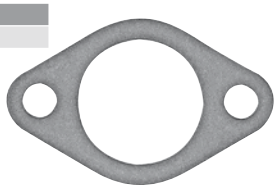

Ref.	R.O.
REC1399-99	1399-99

MOTORES / ENGINES / MOTORI
10-95 HP

Ref.	R.O.
REC414172	27-41417-2

MOTORES / ENGINES / MOTORI
15-25 HP (1977-06)

Ref.	R.O.
REC414181	27-41418-1

MOTORES / ENGINES / MOTORI
15-25 HP (1977-06)

Ref.	R.O.
REC27-757911	27-75791

MOTORES / ENGINES / MOTORI
20-80 HP (1976-97)

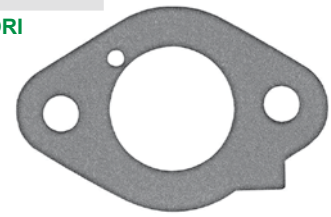

Ref.	R.O.
PAF25-05000011	25-33466

MOTORES / ENGINES / MOTORI
25-220 HP

Ref.	R.O.
PAF25-05060003	878431

NEW

MOTORES / ENGINES / MOTORI
25 HP (4 T / 4 Strokes / 4 Tempi)

Ref.	R.O.
PAF25-05080004	855837

NEW

MOTORES / ENGINES / MOTORI
25 HP (4 T / 4 Strokes / 4 Tempi)

Ref.	R.O.
PAF25-05060002	855219

NEW

MOTORES / ENGINES / MOTORI
25 HP (4 T / 4 Strokes / 4 Tempi)

Ref.	R.O.
REC27-279361	27-27936-1

MOTORES / ENGINES / MOTORI
30 Jet
40/45 (4 cyl)
(1970-97)

Ref.	R.O.
REC27-987691	27-98769-1

MOTORES / ENGINES / MOTORI
30-250 HP (1976-10)

Ref.	R.O.
REC27-812868	27-812868

MOTORES / ENGINES / MOTORI
30, 40, 45 Jet
40, 50, 55, 60 (3 cyl)

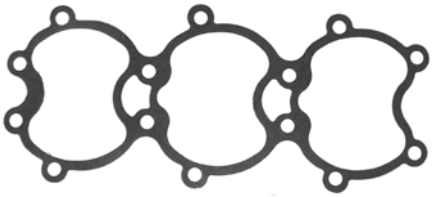

Ref.	R.O.
REC27-812869	27-812869

MOTORES / ENGINES / MOTORI
30-60 HP (1991-10)

Ref.	R.O.
REC27-821370	27-812370

NEW

MOTORES / ENGINES / MOTORI
30-40 HP (2 cyl)

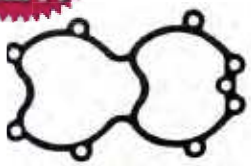

Ref.	R.O.
REC27-552791	27-55279-1

MOTORES / ENGINES / MOTORI
35 - 40HP (1970-89)

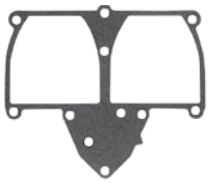

Ref.	R.O.
REC27-481641	27-48164-1

MOTORES / ENGINES / MOTORI
35 -150HP (1970-89)

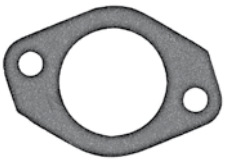

Ref.	R.O.
REC27-733771	27-733771

NEW

MOTORES / ENGINES / MOTORI
50-60 Hp (3 cyl)

Ref.	R.O.
REC27-134612	27-134612

NEW

MOTORES / ENGINES / MOTORI
65/85 Jet
75-90 HP (3 cyl)
100-125 HP (4 cyl)
(1988-10)

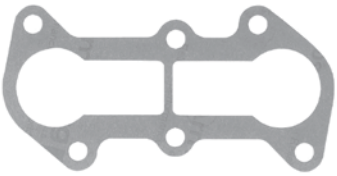

Ref.	R.O.
REC27-139376	27-13937-6

MOTORES / ENGINES / MOTORI
65-125 HP (1988-2010)
65-125 HP (1988-01)

Ref.	R.O.
REC27-151724	27-15172-3

MOTORES / ENGINES / MOTORI
65 /80 Jet
75 / 90 (3 cyl)
100 /115 / 125 (4 cyl)
(1988-98)

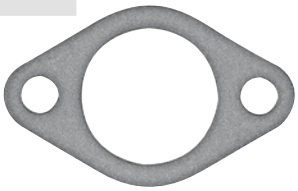

Ref.	R.O.
REC27-76952	27-76952

MOTORES / ENGINES / MOTORI
70-85 HP (1976-86)

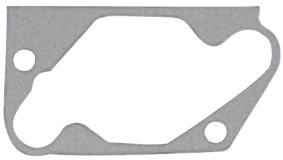

Ref.	R.O.
REC819113	27-819113

MOTORES / ENGINES / MOTORI
70-75 HP (1991-98)

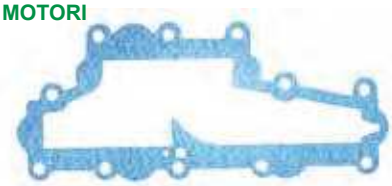

Ref.	R.O.
REC819114	27-819114

MOTORES / ENGINES / MOTORI
70-75 HP (1991-98)

Ref.	R.O.
REC27-62107	27-62107

MOTORES / ENGINES / MOTORI
80-85 HP (1970-75)

Ref.	R.O.
REC27-892211	27-89221-1

MOTORES / ENGINES / MOTORI
100-225 HP (1978-05)

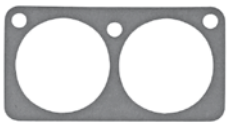

Ref.	R.O.
REC27-883775	27-813859

MOTORES / ENGINES / MOTORI
135-240 HP (1990-00)

Ref.	R.O.
REC27-904301	27-90430-1

MOTORES / ENGINES / MOTORI
135-200 HP (1976-90)

Ref.	R.O.
REC856542	27-856542-1

MOTORES / ENGINES / MOTORI
135-225 HP (1998-99)
V 135-150 HP
200-225 (DFI)

Ref.	R.O.
REC27-672751	27-67275-1

NEW

MOTORES / ENGINES / MOTORI
135-200 HP V-Models
(1976-90)

Ref.	R.O.
REC847525	27-847525-1

MOTORES / ENGINES / MOTORI
150-300 HP (1990-05)

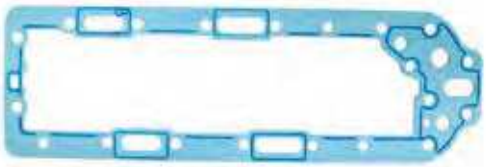

Ref.	R.O.
REC27-657443	27-65744-2

MOTORES / ENGINES / MOTORI
175-250 HP (1976-94)

Ref.	R.O.
REC27-8141951	27-814195-1

MOTORES / ENGINES / MOTORI
200-250 HP (1994-02)

Ref.	R.O.
REC27-850283	27-850283

MOTORES / ENGINES / MOTORI
200-225 DFI (1998-99)

Ref.	R.O.
REC27-127754	27-12775-2

MOTORES / ENGINES / MOTORI
V-200 / 2.5 L (EFI)
(1978-1988)

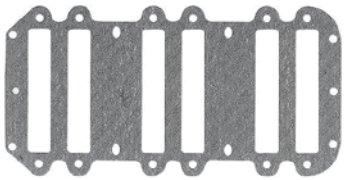

Ref.	R.O.
REC27-877361	27-87736-1

MOTORES / ENGINES / MOTORI
V-200

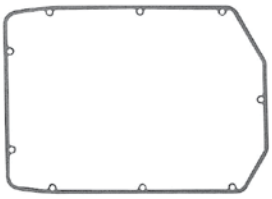

Ref.	R.O.
REC27-967611	27-96761-1

MOTORES / ENGINES / MOTORI
V-200 (1978-90)

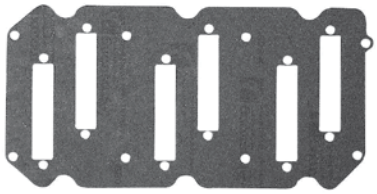

Ref.	R.O.
REC27-993163	27-993163

MOTORES / ENGINES / MOTORI
280-300 HP Racing (1991-05)

JUNTAS CULATÍN
GASKET, HEAD COVER
GUARNIZIONE COPERCHIO TESTA

Ref.	R.O.
REC27-78410	27-78410

MOTORES / ENGINES / MOTORI
20 HP (1978-80)

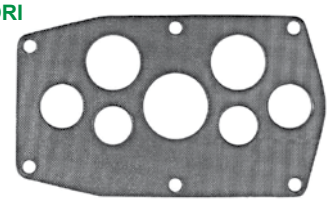

Ref.	R.O.
REC27-437772	27-43777-2

MOTORES / ENGINES / MOTORI
30 Jet
40 -50 HP (4 cyl) (1980-97)

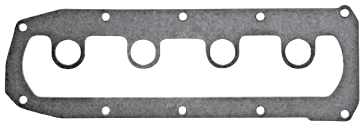

Ref.	R.O.
REC27-856729	27-85490-2

MOTORES / ENGINES / MOTORI
35/40 (2 cyl) (1980-89)

Ref.	R.O.
REC6E9-11193-A0	27-97704M

NEW

MOTORES / ENGINES / MOTORI
40C / 40 Twin Carb

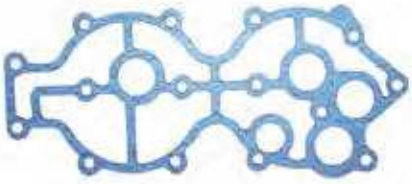

Ref.	R.O.
REC663-11193-00	27-81254M

NEW

MOTORES / ENGINES / MOTORI
48 / 55 /N48
60 (2 cyl)

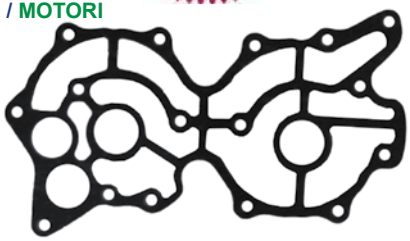

Ref.	R.O.
REC27-85487	27-85487

MOTORES / ENGINES / MOTORI
45/50 HP (4 cyl) (1980-86)

Ref.	R.O.
REC27-437792	27-43779-2

MOTORES / ENGINES / MOTORI
50-60 HP (3 cyl) (1984-90)

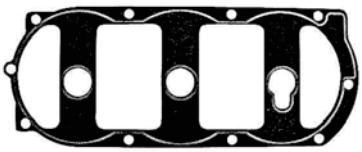

Ref.	R.O.
REC27-88449	27-88449

MOTORES / ENGINES / MOTORI
50- 70 HP (3 cyl) (1980-90)

Ref.	R.O.
REC27-96278	27-96278

MOTORES / ENGINES / MOTORI
135-200 HP (V-Models)
(1976-88)

Ref.	R.O.
REC951853	27-95183-3

JUNTAS COLECTOR Y CARTER
GASKETS, UPPERCASING, OIL PAN, MANIFOLD
GUARNIZIONI COLLETTORE E CARTER

Ref.	R.O.
REC646-14623-A1	27-80355

NEW

MOTORES / ENGINES / MOTORI
2B, A

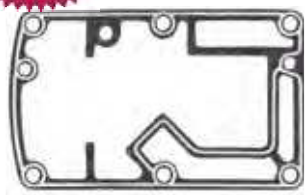

Ref.	R.O.
REC676-45114-A1	27-19175

MOTORES / ENGINES / MOTORI
K 40HP
W40
40/40C Twin Carb

NEW

Ref.	R.O.
REC682-45113-A0	27-96618

MOTORES / ENGINES / MOTORI
9.9C / 15C
15K
W15

NEW

Ref.	R.O.
REC697-45114-00	27-98952M

MOTORES / ENGINES / MOTORI
55 / W-55
W-40

NEW

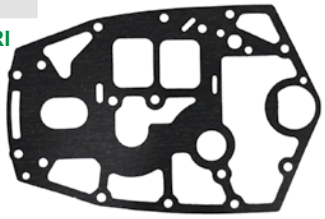

JUNTAS ESCAPE
EXHAUST GASKET
GUARNIZIONE SCARICO

Ref.	R.O.
REC6G1-41133-A0	27-11568M

MOTORES / ENGINES / MOTORI
6C/D
8C

NEW

Ref.	R.O.
REC682-41133-A0	27-83955M

NEW

MOTORES / ENGINES / MOTORI
9.9C
15C/K
W15

Ref.	R.O.
REC414991	27-414991

MOTORES / ENGINES / MOTORI
15 Sea Pro
18, 18XD
20, 20XD
25 XD, Sea Pro
(1977-06)

Ref.	R.O.
REC414758	27-41475-8

MOTORES / ENGINES / MOTORI
15 Sea Pro / Marathon
18, XD
20, XD
25, Marathon. Sea Pro, Xd, Xs
Super 15
(1977-04)

Ref.	R.O.
REC27-433374	27-43337-4

NEW

MOTORES / ENGINES / MOTORI
15 Sea Pro / Marathon
18 HP
20 (2 cyl) Jet
25 Sea Pro / Marathon

Ref.	R.O.
REC327674	27-327674

MOTORES / ENGINES / MOTORI
20, 25, 25C, 30, 35 HP

Ref.	R.O.
REC664-41134-A0	27-826991M

MOTORES / ENGINES / MOTORI
25K

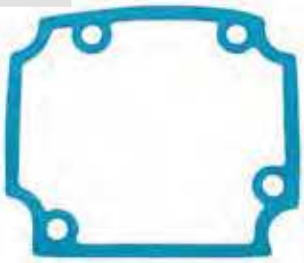

Ref.	R.O.
REC892320	27-892320

MOTORES / ENGINES / MOTORI
25-60 HP (Carb & EFI)
(4 T / 4 Strokes / 4 Tempi)

Ref.	R.O.
REC27-385011	27-38501-1

MOTORES / ENGINES / MOTORI
30 Jet
35
40, 45 (4cyl)
50, 60 (3cyl)
(1970-97)

Ref.	R.O.
REC27-854924	27-85492-2

MOTORES / ENGINES / MOTORI
30 Jet
40-45 Hp (2 cyl)
(1980-97)

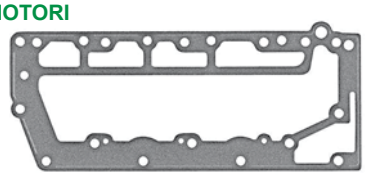

Ref.	R.O.
REC27-66847	27-66847

MOTORES / ENGINES / MOTORI
35-40 HP (2 cyl) (1972-89)

Ref.	R.O.
REC826738	27-826738

MOTORES / ENGINES / MOTORI
40 - 50HP (1995-97)

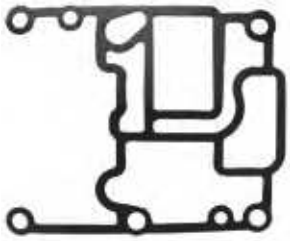

Ref.	R.O.
REC676-41133-A0	27-83383M

MOTORES / ENGINES / MOTORI
40, A, B, C (Twin Carb)
K40 / W40

NEW

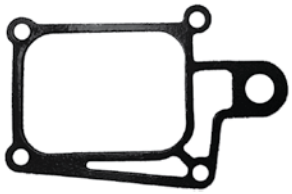

Ref.	R.O.
REC676-45128-00	83386M

MOTORES / ENGINES / MOTORI
40, A, B, C (Twin Carb)

NEW

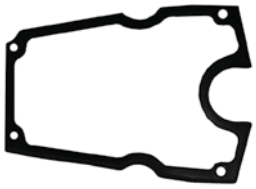

Ref.	R.O.
REC676-45127-00	83384M

MOTORES / ENGINES / MOTORI
40, A, B, C (Twin Carb)
K40 / W40

NEW

Ref.	R.O.
REC688-45123-00	27-81440M

NEW

MOTORES / ENGINES / MOTORI
48 / W-48
55
60 (2 cyl)

Ref.	R.O.
REC663-45123-00	27-81440M

MOTORES / ENGINES / MOTORI
48
55
W-48
W-55
60 (2 cyl)

Ref.	R.O.
REC27-695242	27-69524-2

MOTORES / ENGINES / MOTORI
50-60 HP (3 cyl)

Ref.	R.O.
REC27-695252	27-69525-2

MOTORES / ENGINES / MOTORI
50-70 HP(3 cyl) (1973-90)

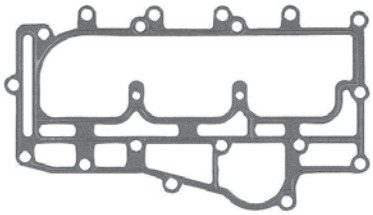

Ref.	R.O.
REC27-703351	27-70335-1

MOTORES / ENGINES / MOTORI
50-70 HP(3cyl) (1973-90)

Ref.	R.O.
REC27-430086	27-43008

MOTORES / ENGINES / MOTORI
65, 80 Jet
75, 90 (3 cyl)
100, 115, 125 (4 cyl)
75, 90, 115 DFI (3cyl) 1.5L
(1987-10)

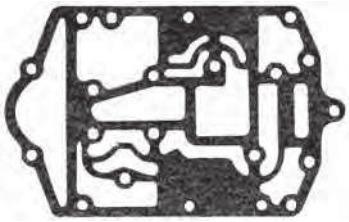

Ref.	R.O.
REC27-43004009	27-43004-1

MOTORES / ENGINES / MOTORI
65-90 HP (3 cyl)
(1987-10)

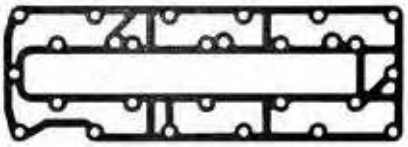

Ref.	R.O.
REC27-8127755	27-812775-5

MOTORES / ENGINES / MOTORI
80 Jet
100-125 (4 cyl)
(1994-98)

Ref.	R.O.
REC27-139581	27-13958-1

MOTORES / ENGINES / MOTORI
80 Jet
100-125 HP (4 cyl)
(1988-06)

Ref.	R.O.
REC27-812775A01	27-812775-4

MOTORES / ENGINES / MOTORI
80 Jet
100-125 (4 cyl)
(1994-98)

Ref.	R.O.
REC27-692381	27-69238-1

MOTORES / ENGINES / MOTORI
90-115 HP (6 cyl) (1980-88)

Ref.	R.O.
REC27-856730	27-85653-1

MOTORES / ENGINES / MOTORI
90-115 HP (6 cyl) (1973-88)

Ref.	R.O.
REC27-991734	27-99173-2

MOTORES / ENGINES / MOTORI
115-200 HP (V-Models)
XR-4 / XR-6
105-140 Jet
150-175 Prox5
(1976-10)

Ref.	R.O.
REC27-904841	27-90484-1

MOTORES / ENGINES / MOTORI
135-225 (V-Models)
XR-4
(1976-90)

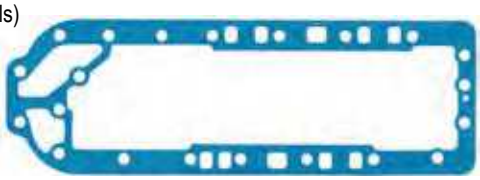

Ref.	R.O.
REC27-782461	27-78246

MOTORES / ENGINES / MOTORI
135-225 HP (V-Models)
XR-4 / XR-6
105-140 HP Jet
150-225 HP (Pro Xs / Pro max)
(1978-10)

Ref.	R.O.
REC27-75786	27-75786

MOTORES / ENGINES / MOTORI
V-175 (1976-88)

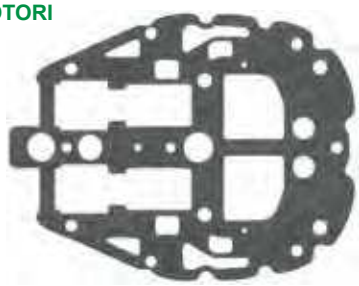

Ref.	R.O.
REC27-78411	27-78411

MOTORES / ENGINES / MOTORI
200/20 HP (1978-80)

Ref.	R.O.
REC27-78409	27-78409

MOTORES / ENGINES / MOTORI
200/20 (1978-80)

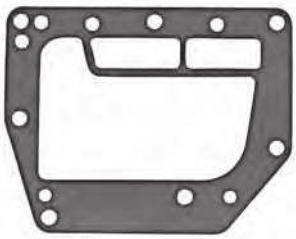

Ref.	R.O.
REC27-39402	27-39402

MOTORES / ENGINES / MOTORI
200-20 HP (1970-80)

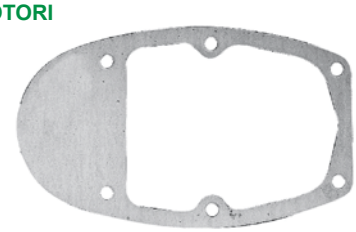

Ref.	R.O.
REC27-48801	27-48801

MOTORES / ENGINES / MOTORI
1150
1250
1350
80, 650, 800 (4cyl)
(1970-72)

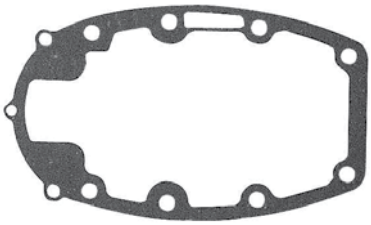

CARBURADOR
CARTURATOR
CARBURATORE

Ref.	R.O.
PAF8-05040000	339-895110T01, 339-895110T11

NEW

MOTORES / ENGINES / MOTORI
8 & 9.9 (4 T / 4 Strokes / 4 Tempi)
(209 cc)
OP325500+

GUÍA CARBURADOR
CARBURATOR GUIDE
GUIDE CARBURATORE

HP	SERIE SERIAL SERIE	CARBURADOR CARBURATOR CARBURATORE	KIT	BOYA FLOAT GALLEGIANTE
2.5	017000 +	**REC3303-8231752**		
3.	0A855097 a / to / a 0G710612	**REC3303-8231752**		
3.3	0D901217 +	**REC3303-8231752**		
4 & 5 (2T / 2 stroke/ 2 tempi)	0P017000+	**REC3303-812648T**	**REC6G1-W0093-00**	**REC16253**
4/5	9589154 a / to / a OP016999	**REC3303-812648T**	**REC6G1-W0093-00**	**REC16253**
4/5 (1Cyl. Japan)	9542671 +	**REC3303-812648T**	**REC6G1-W0093-00**	**REC16253**

NEW

REC3303-8231752

REC3303-812648T

KITS CARBURADOR
CARBURETOR KIT
KIT CARBURATORI

Ref.	R.O.
REC6E9-W0093-02	17068M

NEW

Ref.	R.O.
REC6F6-W0093-00	611810M

NEW

Ref.	R.O.
REC6H1-W0093-01-00	84475M

Ref.	R.O.
REC66M-W0093-01	802706A1

Ref.	R.O.
REC6E9-W0093-03	97667M

Ref.	R.O.
REC67F-W0093-00	804346T01, 804346T1, 804346T02

Ref.	R.O.
REC6A1-W0093-01	92520M

Ref.	R.O.
REC6G1-W0093-00	11502M

Ref.	R.O.
REC696-W0093-00	84419M

Contenido para dos carburadores
For two carburetors
Contenuto per due carburatori

Ref.	R.O.
REC6E7-W0093-01	814481M

Ref.	R.O.
REC689-W0093-02	84456M

Ref.	R.O.
REC677-W0093-00	84473M

Ref.	R.O.
REC1395-811691-2	1395-811691 2

Ref.	R.O.
REC1395-811691-3	1395-811691 3

Ref.	R.O.
REC1395-823635-4	1395-823635-4

Ref.	R.O.
REC1395-9650	

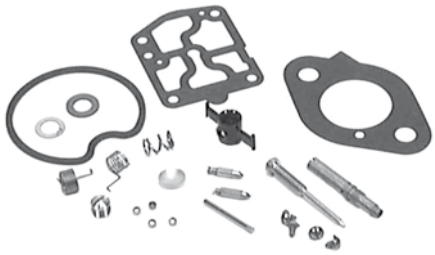

Ref.	R.O.
REC8542561	854256 1

NEW

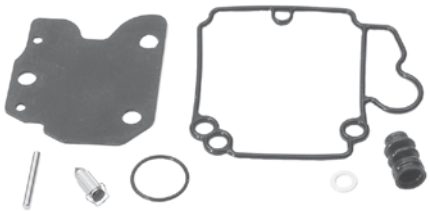

Ref.	R.O.
REC1395-48401	1395-4808-1

Ref.	R.O.
REC1395-6200	1395-6200

Ref.	R.O.
REC1395-6452	1395-6452, 1395-8506

Ref.	R.O.
REC1395-9651	1395-9651

Ref.	R.O.
REC1395-2015	1399-1717, 1399-2015, 1399-3523

Ref.	R.O.
REC1395-5198	1399-5135, 1399-5198

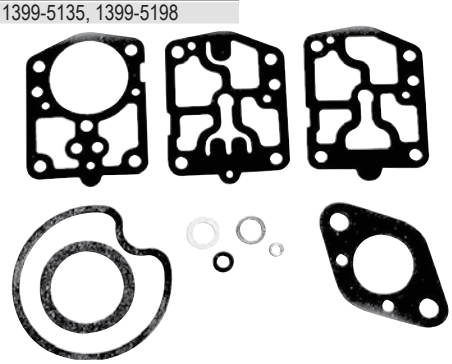

Ref.	R.O.
REC40470	1395-9262-1

Ref.	R.O.
REC1399-5137	1399-5137

Ref.	R.O.
REC40480	1395-5109-1

Ref.	R.O.
REC1395-8112231	1395-811223-1

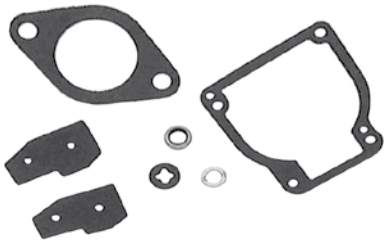

Ref.	R.O.
REC8107492	810749-2

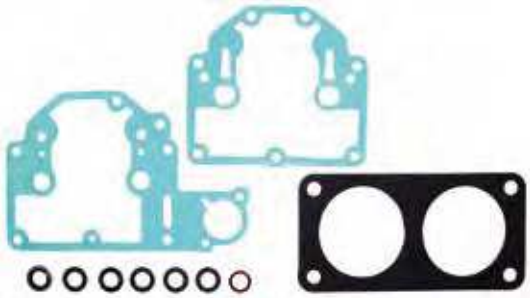

Ref.	R.O.
REC8107493	810749-3

Ref.	R.O.
REC1395-9024	1395-9024

GUÍA KITS CARBURADOR
CARBURATOR SET GUIDE
GUIDE KITS CARBURATORE

4 TIEMPOS STROKES

HP	SERIE / SERIAL / SERIE	REF
8 (Bodensee)	0P400999+	REC66M-W0093-01
9.9 (323cc)	0P075166 - 0P400999	REC66M-W0093-01
13.5 Internat.	0P134638+	REC66M-W0093-01
15	0P9973100+	REC66M-W0093-01
75 (Bodensee)	0G960500 - 1B226999	REC67F-W0093-00
90	0G960500 - 1B226999	REC67F-W0093-00
25	9973100+	REC8542561
30	0P017000 - 0P153499	REC8542561
30 CARB (3 cyl)	0P153500 - 0P400999	REC8542561
40	0P017000 - 0P153499	REC8542561
40 CARB (3 cyl)	0P153500+	REC8542561
40 (4 cyl)	0P094500 - 0P206999	REC8542561
50 (4 cyl)	0P094500 - 0P206999	REC8542561
60 (4 cyl)	0P094500 - 0P206999	REC8542561

2 TIEMPOS STROKES

HP	SERIE / SERIAL / SERIE	REF
2B	6A1-000101 +	REC6A1-W0093-01
6	9464526 +	REC1395-97611
6 C/ D	6H8 & 6H6	REC6G1-W0093-00
8	9461526 +	REC1395-97611
8 B	677	REC677-W0093-00
8 C	6G1	REC6G1-W0093-00
W8 (W/Marathon) M/ML/SUL	677	REC677-W0093-00
9.9	9461526 +	REC1395-97611
9.9 C	6E7/ 70-71 (682)	REC677-W0093-00
9.9 C	M-682-070796+ ML-682-368040+ E-682-251511+ EL-682-55146+	REC6E7-W0093-01
10 Sea Pro , Viking	Todas / All / tutti	REC1395-97611
15	9542620 +	REC1395-97611
15 SeaPro	992700 +	REC1395-97611
15 Viking	OP32550 +	REC1395-97611
15C	6E8/ 71 (684)	REC6E7-W0093-01
15 C	M-684-052848+ ML-684-332302+ E-684-252381+ EL-684-553251+	REC6E7-W0093-01
20 (2 cyl)	9415101 +	REC1395-97611
20 JET	9807909 - OP016999	REC1395-97611
25 (2 cyl)	9415101 +	REC1395-97611
25, 25 SeaPro (super 15)	9415101 +	REC1395-97611
25A	M-648-24991+ ML-648-64046+ E-648-27056+ EL-648-56526+	REC689-W0093-02
25 C	695	REC689-W0093-02
28	M-664-05306+ ML-664-41686+ E-664-26236+ EL-664-57421+	REC689-W0093-02
30 (2Cyl)	9854537+	REC1395-823635-4
30A	M-689-230100+ ML-689-530100+ E-689-250100+ EL-689-550100+	REC689-W0093-02
30 Jet (3Cyl)	9973100+	REC1395-823635-4
30 Jet	9570790+	REC1395-9650
40 (2 Cyl)	9854537+	REC1395-823635-4
40 (3 Cyl)	9973100+	REC1395-823635-4
40 (4 Cyl)	9570790+	REC1395-9650
40 (Twin Carb)	6E9-000106 -42316	REC6E9-W0093-03
40 (Twin Carb) (w/oil inject) (w/auto blend)	6E9-	REC6E9-W0093-02
40 A/ B (above / thru prop. exhaust)	676	REC6H1-W0093-01-00
40 (W/Marathon)	6F6	REC6F6-W0093-00
40 Jet	0P094500+	REC1395-823635-4
45 Jet	9885385+	REC1395-823635-4
45 (4 Cyl(	9466692+	REC1395-9650
48	M-670-02641+ ML-670-34581+	REC696-W0093-00
W48	670	REC696-W0093-00
50 (3 Cyl)	9885345+	REC1395-823635-4
55 / W55	663	REC696-W0093-00
55 (3 Cyl)	9885345+	REC1395-823635-4
60	675	REC696-W0093-00
60 (3Cyl) & (BIGFOOT)	9885345+	REC1395-823635-4
65 Jet	9793577 - 0P325499	REC1395-823635-4
75 (3 Cyl)	9793577+	REC1395-823635-4
80 Jet	9793577 - 0P325499	REC1395-823635-4
90 (3 Cyl)	9793577+	REC1395-823635-4
100 (4 Cyl)	9523034 - 0P058999	REC1395-823635-4
115 (4 Cyl)	0P017000+	REC1395-823635-4
125 (4 Cyl)	3793577+	REC1395-823635-4
V-135/V-150/ V-175/V-200HP	0G303045 +	REC1395-811691-2
V-135/V-150/ V-175/V-200HP	0G303046 +	REC1395-811691-3
225HP (3.0L Carb) (Sea Pro)	0G303045+	REC1395-811691-2
225HP (3.0L Carb) (Sea Pro)	0G303046 +	REC1395-811691-3
XR-6	0G303045+	REC1395-811691-2
XR-6	0G303046+	REC1395-811691-3

KITS AGUJA CARBURADOR
NEEDLE VALVE SETS
KIT SPILLO CONICO CARBURATORE

Ref.	R.O.
REC6H3-14590-00	17050M

MOTORES / ENGINES / MOTORI
4 T / 4 Strokes / 4 Tempi
75 (0G960500+)
75 BODENSEE (0G960500+)
90 (0G960500+)

NEW

Ref.	R.O.
REC6G1-14546-00	11490M

MOTORES / ENGINES / MOTORI
6C (6H8)
6D (6H6)
8C (6G1)

NEW

Ref.	R.O.
REC6E8-14390-12	14216M

MOTORES / ENGINES / MOTORI
W8 (677)
W15 (684)
15C (684) (6E8-04)

NEW

Ref.	R.O.
REC626-14390-90	80447M

NEW

MOTORES / ENGINES / MOTORI
15C (684) 9.9C (682)
8K (680) W8 (677)
8B (677) W15 (662)

Ref.	R.O.
REC677-14343-68	95495M

NEW

MOTORES / ENGINES / MOTORI
15C (684) (#136)
W15 (684)

Ref.	R.O.
REC1395-7824	1395-7824

Ref.	R.O.
REC1395-8318	1395-8318

Ref.	R.O.
REC1399-1473	1395-9258, 1399-1138, 1399-1473

Ref.	R.O.
REC19271-1	19271-1

Ref.	R.O.
REC1395-811690-1	1395-811690-1

AGUJA CARBURADOR
NEEDLE VALVE
SPILLO CONICO CARBURATORE

Ref.	R.O.
REC1395-9595-1	1395-9595-1

Ref.	R.O.
REC809570-1	809570-1

Ref.	R.O.
REC1395-9022	1395-9022

TORNILLOS CARBURADOR
BOLT SCREW
VITI CARBURATORE

Ref.	R.O.
REC647-14323-00	10-80573M

NEW

MOTORES / ENGINES / MOTORI
4A 20C
5A/ C 25C / K / K25 / W25
8A / B / K / W8 28
9.9C 30A / W30
15A / C / K

Ref.	R.O.
REC6A0-14325-00	10-41889M

NEW

MOTORES / ENGINES / MOTORI
8 - 50 HP
M3x5

BOYAS
FLOATS
GALLEGGIANTI

Ref.	R.O.
REC16253	16253

MOTORES / ENGINES / MOTORI
2 T / 2 Strokes / 2 Tempi
4, 5, 6, 8, 9.8 HP

Ref.	R.O.
REC647-14385-00	80450M

MOTORES / ENGINES / MOTORI
4A 15A / C / K / W15
5A/C K40
8A / B / K-L-S W8 (M)(ML)(SVL)
9.9C

Ref.	R.O.
REC6E7-14385-00	14180M

MOTORES / ENGINES / MOTORI
4A (M070824-ML325784+)
5C (M144067-ML425197+)
W8
9.9C (6E7-72)
15C / W15 (6E8-04)

Ref.	R.O.
REC6G1-14985-00	11489M

MOTORES / ENGINES / MOTORI
6C / 6D
8C

Ref.	R.O.
REC676-14966-00	22-83369M

MOTORES / ENGINES / MOTORI
6C/ D
40A / B / C
75 (4 T / 4 Strokes / 4 Tempi)
90 (4 T / 4 Strokes / 4 Tempi)

Ref.	R.O.
REC809569	809569

MOTORES / ENGINES / MOTORI
(4 T / 4 Strokes / 4 Tempi)
9, 9.9, 13.5, 40, 45, 50 HP

Ref.	R.O.
REC648-14385-00	80591M

NEW

MOTORES / ENGINES / MOTORI
20C
25C / K / K25 / W25
28
30A / W30

Ref.	R.O.
REC1395-7623	1395-7623, 1395-9267

Ref.	R.O.
REC1395-8673	1395-8983, 1395-8673

Ref.	R.O.
REC1395-9594	1395-9293

Ref.	R.O.
REC8M6000359	8M6000359, 880596504, 880596522, 880596524, 8M0007943

KIT

Ref.	R.O.
REC19273	19273

MOTORES / ENGINES / MOTORI
WM-3, 5, 6, 8, 9, 10, 77, 12, 13, 13A, 14, 15 ,15A, 16, 16A, 17, 18

PASADOR BOYA
PIN FLOAT
SPINOTTO GALLEGGIANTE

REF.	R.O. OEM	Motor Engine Motore
REC647-14386-10	17-80451M	4A 5C 8A / K / W8 8 Bondensee / Inter. (4 T / 4 Strokes / 4 Tempi) 9.9C (323 cc. 4 T / 4 Strokes / 4 Tempi) 15C / K / W15
REC688-14548-00	17-97730M	6C / D 8C 40C
REC676-14186-00	17-92639M	6C/ D 8C 40A / B / C W-48 55 W-55 60 (2 cyl) 75 (4 T / 4 Strokes / 4 Tempi) 90 (4 T / 4 Strokes / 4 Tempi)
REC6E5-14386-01	17-11794M	9.9 / 13.5 / 15HP (4 T / 4 Strokes / 4 Tempi) 40 / 45 / 50HP (4 T / 4 Strokes / 4 Tempi) 20C / 25K / 30A / K40 / 40 Italy
REC663-14548-00	17-81278M	40A 40B 48 / W-48 55 60 (2 cyl)

CABLE ACELERADOR
THROTTLE CABLE
CAVO ACCELLERATORE

REF.	R.O. OEM	Motor Engine Motore	Cambio SHIFT
REC43242-5	43242-5	30 HP, 2 cyl	
	43242-7	40 HP, 2 cyl	
REC43242-6	43242-6	6 HP / 8 HP / 9.9 HP, XR10 10 Magnum, Marathon, Sea Pro Viking, 15 hp Marathon, Sea Pro Viking, 20 (2 cyl.), 20 Jet 25 Marathon, Sea Pro	Lateral Side Laterale
REC43242-9	43242-9	6 HP / 8 HP / 9.9 HP / 9.9 HP (4T) XR10, 10 Magnum 13.5 HP (4T), 15 HP, 15 HP(4T)	Manual Handle Manuale
REC43242-3	43242-3	15 Marathon XP, 15 Sea Pro XP 20 (2 cyl.) 20 Jet, 25 (2 cyl.) 25 Marathon (2 cyl.), 25 Sea Pro (2 cyl.)	Manual Handle Manuale
REC43242-5	86210	7.5 HP & 9.8 HP	Lateral Side Laterale
REC677-26301-02	95405M	8K / W8	
REC6E0-26301-01	11921M	4AC / A/ AS 5C / CS / CMH	

BOMBA COMBUSTIBLE
FUEL PUMP
POMPA BENZINA

BOMBAS MECÁNICAS
MANUAL FUEL PUMP
POMPA DE BENZINA MANUALE

Ref.	R.O.
PAF15-07140000	835389A2, 835389T1, 835389T02

MOTORES / ENGINES / MOTORI
8 (BODENSEE (4 T / 4 Strokes / 4 Tempi)
15 (4 T / 4 Strokes / 4 Tempi)
13.5 (4 T / 4 Strokes / 4 Tempi) Inter.
9.9 (4 T / 4 Strokes / 4 Tempi) 323 cc

Ref.	R.O.
REC692-24410-00	43113M, 43113T

MOTORES / ENGINES / MOTORI
15
20C / 25C (Thru prop. exhaust)
30A
40 (Twin Carb) (W/oil injection) (w/auto-blend)
55
W-55

Ref.	R.O.
PAF25-05130000	826398T3

MOTORES / ENGINES / MOTORI
25-60 HP (4 T / 4 Strokes / 4 Tempi)

Ref.	R.O.
REC899106T01	899106T01, 892874T01 808505T, 827682T

NEW

MOTORES / ENGINES / MOTORI
30, 40 HP EFI (3 cyl)
40, 50, 60 HP EFI (4 cyl)
(4 T / 4 Strokes / 4 Tempi)

Ref.	R.O.
REC68V-24410-00	880890T1

NEW

MOTORES / ENGINES / MOTORI
75 HP (OT409000+)
75 Bodensee (OT40900+)
90 HP (OT409000+)
115 EFI (OT178500 - 1B366822)
(4 T / 4 Strokes / 4 Tempi)

BOMBAS ELÉCTRICAS
ELECTRIC FUEL PUMP
POMPA DE BENZINA ELETTRICA

Ref.	R.O.
RM881705T1	881705T1

MOTORES / ENGINES / MOTORI
200, 225, 250 HP 3.0L EFI
V-150, V-175, V-200, 2,52 EFI

Ref.	R.O.
REC67H-13907-00	809088T1, 809088T01

NEW

Ref.	R.O.
REC880596T55	880596T55

NEW

Ref.	R.O.
REC880596T58	880596T58

NEW

Ref.	R.O.
REC883202T02	883202T02, 883202A02

NEW

Ref.	R.O.
REC898101T67	898101T67

NEW

Ref.	R.O.
REC888733T02	888733T02, 888733T1

Ref.	R.O.
REC69J-13907-03	888246T, 888246T01

NEW

Ref.	R.O.
REC8M0047624	8M0047324, 8558432

NEW

Ref.	R.O.
REC861155A3	861155A3, 8611552

NEW

Ref.	R.O.
REC14307T01	14307T01, 14307, A1

NEW

Ref.	R.O.
REC63P-13907-03	880889T, 880889T01

NEW

Ref.	R.O.
REC69J-24410-02	888251T, 888251T02

NEW

JUNTAS VST
VST GASKETS
GUARNIZIONE VST

Ref.	R.O.
REC27-883213	27-883213

NEW

MOTORES / ENGINES / MOTORI
30/40 EFI (3Cyl)
40 / 50 / 60 efi (4 Cyl)
(4 T / 4 Strokes / 4 Tempi)
Formula 60 (Race Outboard)

Ref.	R.O.
REC27-880596502	26-880596502

NEW

MOTORES / ENGINES / MOTORI
75 / 80/ 90 /110 /115 EFI
135 / 150 / 175 / 200 Verado (4 Cyl)
200 / 225 / 250 / 275 / 300 350 Verado (6 Cyl)
(4 T / 4 Strokes / 4 Tempi)

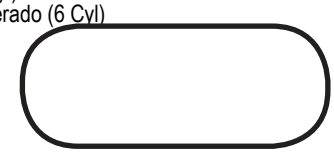

Ref.	R.O.
REC27-889319	27-889319

NEW

MOTORES / ENGINES / MOTORI
75 / 90 DFI, 80 Jet (3 Cyl) 1.5 L
115 / 125 DFI (3 Cyl) 1.5 L Pro xs
200 (3.0) DFI DTS
200 DFI 3.0L Pro xs
225 DFI 3.0L Pro xs

Race Outboard 225 x 5 (3.0 & 3.2L DFI)

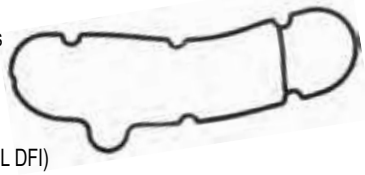

Ref.	R.O.
REC27-883252	27-883252

NEW

MOTORES / ENGINES / MOTORI
110 Jet (2.5L9
150 / 175 Proxs (2.5 L)
200 / 225 / 250 (3.0 EFI)
V-135 - V-200 EFI/ DFI (2.5L)

Ref.	R.O.
REC68V-14984-00	27-81325

NEW

MOTORES / ENGINES / MOTORI
115 EFI
225 EFI
(4 T / 4 Strokes / 4 Tempi)

Ref.	R.O.
REC25-809086	25-809086

NEW

MOTORES / ENGINES / MOTORI
200 DEFI
225 / 250 (3.0L EFI)
V-150 - V-200 EFI

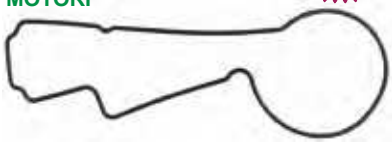

GUÍA BOMBAS ELÉCTRICAS DE COMBUSTIBLE Y FLOTADOR
ELECTRIC FUEL PUMP GUIDE & FLOAT
GUIDA POMPA DE BENZINA ELETTRICA E GALLEGGIANTI

4 TIEMPOS STROKES

MODELO MODEL MODELLO	Serie USA USA Serial Serie USA	SerieBEL BEL Serial Serie BEL	REF.	REF. HIGH	FLOTADOR FLOAT GALLEGGIANTE
25 EFI (3 CYL)	0R106999 +		REC898101T67		
25 Jet EFI (3 CYL)	0R165086 +		REC898101T67		
30 EFI (3 CYL)	0R106969 +		REC898101T67		
30 EFI (3 CYL)	- 1B036613	- 0P340241	REC883202T02		
40 EFI (3 & 4 CYL)	- 1B036613	- 0P340241	REC883202T02		
50 EFI (4 CYL)	- 1B036613	- 0P340241	REC883202T02		
60 EFI (4 CYL)	- 1B036613	- 0P340241	REC883202T02		
75 EFI	1B366823 - 2B094995		REC880596T58	REC880596T55	REC8M6000359
80 EFI	1B366823 - 2B094995	0P459572 - 2B094995	REC880596T58	REC880596T55	REC8M6000359
90 EFI	1B366823 - 2B094995		REC880596T58	REC880596T55	REC8M6000359
100 EFI	1B366823 - 2B094995	0P459572 - 2B094995	REC880596T58	REC880596T55	
115 EFI	0T178500 - 1B366822		REC63P-13907-03		
135 VERADO (4 CYL)	1B227001 - 1B517158	0P419487 - 0P514868	REC880596T58	REC880596T55	REC8M6000359
135 VERADO (4 CYL)	1B517159 +	0P514869 +	REC880596T58		REC8M6000359
150 VERADO (4 CYL)	1B227001 - 1B517158	0P419487 - 0P514868	REC880596T58	REC880596T55	REC8M6000359
150 VERADO (4 CYL)	1B517159 +	0P514869 +	REC880596T58		REC8M6000359
175 VERADO (4 CYL)	1B227001 - 1B517158	0P419487 - 0P514868	REC880596T58	REC880596T55	REC8M6000359
175 VERADO (4 CYL)	1B517159 +	0P514869 +	REC880596T58		REC8M6000359
200 VERADO (4 CYL)	1B517159 +	0P514869 +	REC880596T58		REC8M6000359
200 PRO VERADO (6 CYL)	2B034840 - 2B144122	2B034840 - 2B144122	REC880596T58	REC880596T55	REC8M6000359
200 VERADO (6 CYL)	0T980000 - 2B144122	0P409357 - 2B144122	REC880596T58	REC880596T55	REC8M6000359
225 EFI	0T653945 +		REC69J-13907-03	REC69J-24410-02	
225 VERADO (6 CYL)	0T980000 - 2B144122	0P409357 - 2B144122	REC880596T58	REC880596T55	REC8M6000359
225 PRO VERADO (6 CYL)	1B830170 - 2B144122	1B830170 - 2B144122	REC880596T58	REC880596T55	REC8M6000359
250 VERADO (6 CYL)	0T980000 - 2B144122	0P409357 - 2B144122	REC880596T58	REC880596T55	REC8M6000359
275 VERADO (6 CYL)	0T980000 - 2B144122	0P409357 - 2B144122	REC880596T58	REC880596T55	REC8M6000359
300 PRO VERADO (6 CYL)	1B830170 - 2B144122		REC880596T58	REC880596T55	REC8M6000359
300 VERADO (6 CYL)	1B517434 - 2B144122	0P520553 - 2B144122	REC880596T58	REC880596T55	REC8M6000359
350CSi VERADO	1B716557 - 2B143542	1B716557 - 2B143542	REC880596T58	REC880596T55	REC8M6000359

GUÍA BOMBAS ELÉCTRICAS DE COMBUSTIBLE
ELECTRIC FUEL PUMP GUIDE
GUIDA POMPA DE BENZINA ELETTRICA

MODELO MODEL MODELLO	Serie USA USA Serial Serie USA	SerieBEL BEL Serial Serie BEL	REF.
75 DFI (3 CYL)(1.5L)	0T980000 +		REC888733T02
80 JET (3 CYL)(1.5L)	1B586067 +		REC888733T02
90 DFI (3 CYL)(1.5L)	0T801000 +		REC888733T02
115 PROXS (3 CYL)(1.5L)	1B751825 +		REC888733T02
115DFI (3 CYL)(1.5L)	0T801000+		REC888733T02
V-115 TO V-175 DFI (2.5L)	ALLS		REC8M0047624
125 PROXS (3 CYL)(1.5L)	1B736885 +		REC888733T02
V-150 (EFI) 2.5L	0T409000 +		RM881705T1
V-150 (EFI)	0G303046 - 0T408999		REC67H-13907-00
V-175 XRI (EFI)	0D000750 - 0G303045		REC14307T01
V-175 (EFI) 2.5L	0T409000 - 0T800999		RM881705T1
V-175 (EFI)	0G303046 - 0T408999		REC67H-13907-00
V-200 (EFI) 2.5L	0T409000 +		RM881705T1
V-200 (EFI)	0C100861 - 0C999999		REC14307T01
V-200 (EFI)	0G303046 - 0T408999		REC67H-13907-00
V-200 XRI (EFI)	0D082000 - 0G303045		REC14307T01
200 (3.0L EFI)	0T750164 +		RM881705T1
200 PROXS (3 CYL)(3.0L)	1B504989 +		REC888733T02
200 & 225 (DFI) 3.0L	0T801000+		REC888733T02
200 & 225 (DFI)	0T599000 - 0T800999		REC888733T02
200 (3.0L) DFI (DTS)	0T599000 +		REC888733T02
V-220	0B117316 +		REC14307T01
200 & 225 (DFI)	OG590000 - OT598999		REC8M0047624
225 (3.0L EFI)	0T409000 +		RM881705T1
225 (3.0L EFI) SEAPRO	0T801000 - 1B417701		RM881705T1
225 PROXS (DFI)(3.0L)	1B104549 +		REC888733T02
225 (3.0L) DFI (DTS)	0T599000 +		REC888733T02
250 (3.0L EFI)	0T409000 +		RM881705T1
250 (DFI) 3.0L	1B528615 +		REC888733T02
250 LONG (3.0L EFI)	0T861319 +		RM881705T1
250 PROXS (3.0L)(DFI)	1B426561 +		REC888733T02
3.0L EFI SEAPRO	0T409000 - 0T800999		RM881705T1
Racing Outboard 200 XS & SST DFI (2.5L) ROS	1E050852 +		REC8M0047624
Racing Outboard 200 EFI ProMax/Super Max	0D935000 - 0G858150		REC67H-13907-00
Racing Outboard225 EFI ProMax/Super Max	0D935000 - 0T429939		REC67H-13907-00
Racing Outboard 225 SPORT XS		1E002584 +	REC888733T02
Racing Outboard 225 SPORT XS(3L)	1E000797 - 1E002583		REC888733T02
Racing Outboard 250 SPORT XS	1E002342 +		REC888733T02
Racing Outboard 250 (XS (3.0L DFI)	0T818043 - 1E051113		REC888733T02
Racing Outboard 300 (XS (3.2L DFI)	1E001867 +		REC888733T02
Racing Outboard JP 3.0L DFI	0T997974 +		REC888733T02
SPORT JET 240 EFI	Todos / Alls / Tutti		REC67H-13907-00
SPORT JET 200 DFI JET DRIVE	Todos / Alls / Tutti		REC8M0047624

MEMBRANAS BOMBA COMBUSTIBLE
FUEL PUMP DIAPHRAGMS
MEMBRANA POMPA BENZINA

Ref.	R.O.
REC6E0-24471-00	91748M

NEW

MOTORES / ENGINES / MOTORI
2B
4A
5C

Ref.	R.O.
REC6E0-24411-00	91753M

NEW

MOTORES / ENGINES / MOTORI
4A
5C

Ref.	R.O.
REC6G1-24411-00	11499M

NEW

MOTORES / ENGINES / MOTORI
6C/D
8C

Ref.	R.O.
REC6G1-24471-00	11497M

NEW

MOTORES / ENGINES / MOTORI
6C/D
8C

Ref.	R.O.
REC677-24411-02	84262M

NEW

MOTORES / ENGINES / MOTORI
8B/W8 (M)(ML)(SVL)
15C/W15
K40HP

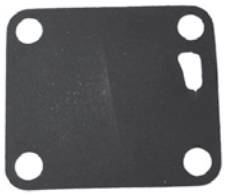

Ref.	R.O.
REC677-24471-01	84265M

NEW

MOTORES / ENGINES / MOTORI
8B/W8 (M)(ML)(SVL)
15C/W15
K40HP

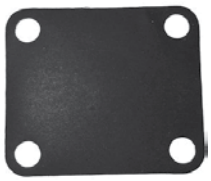

Ref.	R.O.
REC663-24411-00	84141M

NEW

MOTORES / ENGINES / MOTORI

8K	30A
15K / W15	40A, B, C
20C	48
W25 / 25K / C / K25 / 28	55 / W-55
W30	60 (2 cyl)
W40	K40

Ref.	R.O.
REC648-24411-00	80606M

NEW

MOTORES / ENGINES / MOTORI

8K	W30, 30A
20C, 28	W40 / K40 / 40A, B, C
48	K25
55	W48
W15, A, K	W55
W25, C	60 (2cyl)

JUNTAS BOMBA COMBUSTIBLE
FUEL PUMP GASKETS
GUARNIZIONI POMPA BENZINA

Ref.	R.O.
REC6E0-24434-00	27-91754M

NEW

MOTORES / ENGINES / MOTORI

4A
5C

Ref.	R.O.
REC6E0-24435-00	91746M

NEW

MOTORES / ENGINES / MOTORI

4A
5C
15K

Ref.	R.O.
REC6G1-24431-01	27-11500M

NEW

MOTORES / ENGINES / MOTORI

6C / D
8C

Ref.	R.O.
REC677-24435-01	27-84264

NEW

MOTORES / ENGINES / MOTORI

8B / W8	15C
9.9C	K40 HP

Ref.	R.O.
REC648-24434-01	27-80613M

NEW

MOTORES / ENGINES / MOTORI

8K 8L-S	48
15K (L)	55
25K (L)	60 (2 cyl)
K40 HP	W15
15A	W25
20C	W30
25C	W40
28	W48
30A	W55
40A, B, C	

Ref.	R.O.
REC648-24435-02	27-80614M

NEW

MOTORES / ENGINES / MOTORI

8K 8L-S	48
15K (L)	55
25K (L)	60 (2 cyl)
K40 HP	W15
15A	W25
20C	W30
25C	W40
28	W48
30A	W55
40A, B, C	

KIT BOMBA COMBUSTIBLE
SET, FUEL PUMP
KIT POMPA BENZINA

Ref.	R.O.
REC21-42990A10	21-42990A10

MOTORES / ENGINES / MOTORI

30 / 45 / 65 / 105 / 140 Jet
100 / 115 / 125 (4 cyl)
200 DFI
225 (3.0L) Carb / EFI / SeaPro
30 / 40 (2 cyl)
40 (3 cyl)
40 (4 cyl)
50 /55 / 60 / 75 / 90 (3 cyl)
V-135 - V-200 / XR-6

Ref.	R.O.
REC21-13424A1	21-13424A1

MOTORES / ENGINES / MOTORI

35 / 50 / 60 (3 cyl)

Ref.	R.O.
REC21-30430A13	21-30430A13

MOTORES / ENGINES / MOTORI

75 (4 cyl)

Ref.	R.O.
REC55278A5	55278A5

MOTORES / ENGINES / MOTORI

75 (4 cyl)

Ref.	R.O.
REC55278A4	55278A4

Ref.	R.O.
REC89031A3	89031A3

MOTORES / ENGINES / MOTORI
90 / 115 / 140 (6 cyl)

Ref.	R.O.
REC21-30430A14	21-30430A14

MOTORES / ENGINES / MOTORI
90/115 (6 cyl)

Ref.	R.O.
REC89031A1	89031A1

Ref.	R.O.
REC42909A3	42909A3

MOTORES / ENGINES / MOTORI
100/ 115 (4 cyl)

Ref.	R.O.
REC21-30430A7	21-30430A7

MOTORES / ENGINES / MOTORI
115 (6 cyl)
1150, 115
140, 1400
1500 (xs)
900, 90

Ref.	R.O.
REC89031A2	89031A2

MOTORES / ENGINES / MOTORI
V-135 / V-150 (Work / XR-2)
V-150 (Mag-Marathon)
V-1500
v-200 / V-175
300 (3.4L)

Ref.	R.O.
REC89031A4	89031A4

MOTORES / ENGINES / MOTORI
V-200

Ref.	R.O.
REC90363A1	90363A1

MOTORES / ENGINES / MOTORI
V-200
v-225

Ref.	R.O.
REC155278A1	155278A1

MOTORES / ENGINES / MOTORI
1150, 1350, 1400, 1500
400 (2 cyl)
402, 40 (2 cyl)
650 (3 cyl)

Ref.	R.O.
REC56678A1	56678A1

MOTORES / ENGINES / MOTORI
650 (4 cyl)

Ref.	R.O.
REC21-30430A4	21-30430A4

MOTORES / ENGINES / MOTORI
650 (4 cyl)

Ref.	R.O.
REC21-30430A3	21-30430A3

MOTORES / ENGINES / MOTORI
1000 BP / SS
1100
1250 / BP
200 / 350 / 500
650 / 800 / 80 (4 cyl)
950 (6 cyl)

Ref.	R.O.
REC23014A1	23014A1

MOTORES / ENGINES / MOTORI
1000 BP / SS
1100
1250 / BP
200 / 350 / 500
650 / 800 / 80 (4 cyl)
950 (6 cyl)

Ref.	R.O.
REC21-30430A1	21-30430A1

MOTORES / ENGINES / MOTORI
1000 BP / SS
1100
1250 / BP
200 / 350 / 500
650 (4 cyl)
800 / 80 (4 cyl)
950 (6 cyl)

GUÍA BOMBA GASOLINA
FUEL PUMP GUIDE
GUIDE POMPE BENZINA

MODELO MODEL MODELLO	AÑO YEAR ANNO	Nº SERIE SERIAL Nº. Nº SERIE	MEMBRANA DIAPHRAGM MEMBRANA	KIT JUNTAS GASKET KIT KIT GUARNIZIONI	KIT AGUJAS INLET NEEDLE KIT AGHI	BOYA FLOAT GALLEGGIANTE	KIT VÁLVULA VALVE KIT VALVOLA CHECK
3.9 (39)	1964-68	1655013-2498135 (KB-7A, KB-7B)		REC1395-2015	REC1399-1473	REC1395-8673	
4 (40) (1-cyl.)	1969-71	2498136-4107219 (KB-10A		REC1395-2015	REC1399-1473	REC1395-8673	
4 (1-cyl.)		(WMD-1)		REC1395-2015	REC1395-8318	REC1395-8673	
4 (1-cyl.)		A855097+				REC16253	
4.5 (1-cyl.)		(KB-10A)		REC1395-2015		REC1399-1473	
4.5 (1-cyl.)		(WMD-1)		REC1395-2015	REC1395-8318	REC1395-8673	
5 (1-cyl.)		A855097+				REC16253	
6		KB-6A, 6B		REC1395-2015	REC1399-1473	REC1395-8673	
6		(AJ-57A)			REC1399-1473	REC1395-8673	
6		(WMC-5, 5A, 5B, 7, 7A, 17, 17B, 17C, 18, 18A, 18B, 19, 19A, 20, 20A, 20B)	REC1395-97611	REC1395-97611			
6		(WMC-23, 28, 34, 39, 41, 41A, 47, 47A, 49, 49A, 57)	REC1395-97611	REC1395-97611			
6	1986-98	0A197112+	REC1395-97611				
6	1986-98	9461526+	REC1395-97611				
7.5 (7.5, 75)		(BB-2A, 2B, 2C, 4A, 5A, 5B, 5C, 5D, 7A, 7C)	REC1399-5137	REC1395-5198	REC1395-9022		
7.5 (7.5, 75)		(KB-9A, 12A)		REC1395-2015	REC1399-1473	REC1395-8673	
7.5		(WMB-2, 4)			REC1395-9022		
8		(WMC-5, 5A, 5B, 7, 7A, 17, 17B, 17C, 18, 18A, 18B, 19, 19A, 20, 20A, 20B)	REC1395-97611	REC1395-97611			
8		(WMC-23, 28, 34, 39, 41, 41A, 47, 47A, 49, 49A, 57)	REC1395-97611	REC1395-97611			
8	1986-98	0A197112+	REC1395-97611				
8	1986-98	9461526+	REC1395-97611				
9.8 (9.8, 110)		(BB-2A, 2B, 2C, 4A, 5A, 5B, 5C, 5D, 7A, 7C)	REC1399-5137	REC1395-5198	REC1395-9022		
9.8 (9.8, 110)		(KB-9A, 12A)		REC1395-2015	REC1399-1473	REC1395-8673	
9.8		(WMB-2, 4)			REC1395-9022		
9.9		(WMC-5, 5A, 5B, 7, 7A, 17, 17B, 17C, 18, 18A, 18B, 19, 19A, 20, 20A, 20B)	REC1395-97611	REC1395-97611			
9.9		(WMC-23, 28, 34, 39, 41, 41A, 47, 47A, 49, 49A, 57)	REC1395-97611	REC1395-97611			
9.9	1986-98	0A197112+	REC1395-97611				
9.9	1986-98	9461526 +	REC1395-97611				
9.9 4T	1999+	G60300-T97999		REC66M-W0093-01		REC809569	
10 (100)		(AJ-56AB)			REC1399-1473	REC1395-8673	

MODELO MODEL MODELLO	AÑO YEAR ANNO	Nº SERIE SERIAL Nº. Nº SERIE	MEMBRANA DIAPHRAGM MEMBRANA	KIT JUNTAS GASKET KIT KIT GUARNIZIONI	KIT AGUJAS INLET NEEDLE KIT AGHI	BOYA FLOAT GALLEGGIANTE	KIT VÁLVULA VALVE KIT VALVOLA CHECK
10 (100)		(KB-1A, 4A)		REC1395-2015	REC1399-1473	REC1395-8673	
10 (Sae Pro, Marathon)		(WMC-33, 33A, 40, 42, 50, 50A, 50B, 55, 55A)	REC1395-97611	REC1395-97611			
10 (XR10, Magnum 10)		(WMC-23, 48, 48A, 49, 49A)	REC1395-97611	REC1395-97611			
15 (150)		(KB-1A, 4A)		REC1395-2015	REC1399-1473	REC1395-8673	
15		(WMC-5, 5A, 5B, 7, 7A, 17, 17B, 17C, 18, 18A, 18B, 19, 19A, 20, 20A, 20B)	REC1395-97611	REC1395-97611			
15		WMC-23, 28, 34, 39, 41, 41A, 47, 47A, 49, 49A, 57)	REC1395-97611	REC1395-97611			
15	1988-98	0B292414+	REC1395-97611				
15	1988-98	9542620+	REC1395-97611				
15 (Super 15, 15XD)		(WMC-13, 13A, 14, 14A, 15A, 16A, 24, 25, 26, 27, 29, 30, 31, 31A, 32, 32A, 35, 35A, 35B, 36, 37, 44, 45, 46, 46A, 52, 52A, 53, 53A, 54, 54A, 56, 56A)	REC1395-97611	REC1395-97611			
15 (Sea Pro, Marathon)		(WMC-33, 33A, 40, 42, 50, 50A, 50B, 55, 55A)	REC1395-97611	REC1395-97611			
15 4T	1998+	G59000+		REC66M-W0093-01		REC809569	
18		(WMC-1, 2, 3, 4, 9, 10, 11, 12)	REC1395-97611	REC1395-97611			
18		(WMC-13, 13A, 14, 14A, 15A, 16A, 24, 25, 26, 27, 29, 30, 31, 31A, 32, 32A, 35, 35A, 35B, 36, 37, 44, 45, 46, 46A, 52, 52A, 53, 53A, 54, 54A, 56, 56A)	REC1395-97611	REC1395-97611			
20 (200)		(KA-22A, 22B, 22C, 23A, 25A)		REC1395-2015	REC1399-1473	REC1395-8673	
20 (200)	1966-67	1866496-2296266	REC23014A1				
20 (20, 200)		(BA-1A, 2A, 2C, 2D, 2E)	REC1399-5137	REC1395-5198			
20		(WMC-1, 2, 3, 4, 9, 10, 11, 12)	REC1395-97611	REC1395-97611			
20		(WMC-13, 13A, 14, 14A, 15A, 16A, 24, 25, 26, 27, 29, 30, 31, 31A, 32, 32A, 35, 35A, 35B, 36, 37, 44, 45, 46, 46A, 52, 52A, 53, 53A, 54, 54A, 56, 56A)	REC1395-97611	REC1395-97611			
20	1986-87	6443973+	REC1395-97611				
20	1986-87	9415101+	REC1395-97611				
20	1986-87	7209533+	REC1395-97611				
20 Jet	1994-98	0G044027 + (WMC-45, 53A)	REC1395-97611	REC1395-97611			
25 (2-cyl.)		(WMC-1, 2, 3, 4, 9, 10, 11, 12)	REC1395-97611	REC1395-97611			
25 (2-cyl.)		(WMC-13, 13A, 14, 14A, 15A, 16A, 24, 25, 26, 27, 29, 30, 31, 31A, 32, 32A, 35, 35A, 35B, 36, 37, 44, 45, 46, 46A, 52, 52A, 53, 53A, 54, 54A, 56, 56A)	REC1395-97611	REC1395-97611			
25	1984-87	6443973+	REC1395-97611				
25	1986-87	9415101+	REC1395-97611				
25	1986-87	7209533+	REC1395-97611				
30 (300) (4-cyl.)		(AJ-54A)			REC1399-1473	REC1395-8673	
30 (300) (4-cyl.)		(KB-2A)		REC1395-2015	REC1399-1473	REC1395-8673	
30 (2-cyl.) (644cc)	1994-98	0G053314+ (WME-36, 36A, 37, 39A, 42, 42A, 63, 64, 65, 66, 67)	REC21-42990A10	REC1395-8112231	REC1395-9595-1	REC1395-9594	
30 Jet (4-cyl.)		(WMA-10, 13)		REC1395-9651	REC1395-9595-1		
30 Jet (4-cyl.)		(WME-53, 68, 69)		REC1395-9651	REC1395-9595-1	REC1395-9594	
30 Jet	1994-97	0C159200+		REC21-42990A10			
30 Jet	1998	G590000+		REC21-42990A10			
35 (350)	1966-69	1960827-2874703	REC23014A1	REC21-30430A1			
35 (350) (4-cyl.)		(AJ-54A)			REC1399-1473	REC1395-8673	
35 (350) (4-cyl.)		(KB-2A)		REC1395-2015	REC1399-1473	REC1395-8673	
35 (2-cyl.)		(KC-4A, 8A, 9A, 9B, 9C, 13A)		REC1395-2015	REC1395-8318	REC1395-8673	
35	1984-86	6445653-0B110788	REC155278A1				REC21-13424A1
35	1984-86	9384476+	REC155278A1				REC21-13424A1
35	1984-86	209608+	REC155278A1				REC21-13424A1
35	1987-89	0B110789+	REC21-42990A10				
35	1987-89	9384476+	REC21-42990A10				
GLM40 (400) (4-cyl.)		(KA-2A, 9A)		REC1395-2015	REC1399-1473	REC1395-8673	
40 (40, 400, 402) (2-cyl.)		(KD-5A)		REC1395-2015	REC1399-1473	REC1395-8673	
40 (40, 400, 402) (2-cyl.)		(WMK-1, 8, 21, 24, 31, 33, 34, 38)		REC1395-2015	REC1399-1473	REC1395-8673	
40 (40, 400, 402) (2-cyl.)	1970-79	2874704-5556229	REC155278A1				
40 (40, 400, 402) (2-cyl.)	1972-79	8002335-8064749	REC155278A1				
40 (40, 400, 402) (2-cyl.)	1972-79	3339688-9251455	REC155278A1				
40 (40, 400, 402) (2-cyl.)	1972-79	3340783-7144762	REC155278A1				
40 (2-cyl.) (644cc)		(WME-36, 36A, 37, 37A, 38, 39A, 42, 42A, 63, 64, 65, 66, 67)		REC1395-8112231	REC1395-9595-1	REC1395-9594	
40 (2-cyl.) (644cc)	1994-98	0G053314+	REC21-42990A10				
40 (3-cyl.)		(WME-53, 68, 69)		REC1395-8112231	REC1395-9595-1	REC1395-9594	
40 (3-cyl.)	1997-98	0G531301+	REC21-42990A10				
40 (3-cyl.)	1997-98	9973100+	REC21-42990A10				

MODELO MODEL MODELLO	AÑO YEAR ANNO	Nº SERIE SERIAL Nº. Nº SERIE	MEMBRANA DIAPHRAGM MEMBRANA	KIT JUNTAS GASKET KIT KIT GUARNIZIONI	KIT AGUJAS INLET NEEDLE KIT AGHI	BOYA FLOAT GALLEGGIANTE	KIT VÁLVULA VALVE KIT VALVOLA CHECK
40 (4-cyl.)		(WMA-4)	REC1395-9024	REC1395-9024	REC1395-9022		
40 (4-cyl.)		(WMA-7B)		REC1395-9651	REC1395-9595-1		
40 (4-cyl.)		(WMA-9, 10, 13)		REC1395-9651	REC1395-9595-1		
40 (4 T / 4 Stroke / 4 Tempi)	1998	0G231123+			REC809570-1	REC809569	
45 (450) (4-cyl.)		KA-17A		REC1395-8112231	REC1399-1473	REC1395-8673	
45 (4-cyl.)		(WMA-4)	REC1395-9024	REC1395-9024	REC1395-9022		
45 (4-cyl.)		(WMA-7B)		REC1395-9651	REC1395-9595-1		
45 (4-cyl.)		(WMA-9, 10, 13)		REC1395-9651	REC1395-9595-1		
45 (4-cyl.)	1987-89	0B110789+	REC21-42990A10				
45 (4-cyl.)	1987-89	9466692+	REC21-42990A10				
45 (4 T / 4 Stroke / 4 Tempi, Nodensee)	1996-98	0G231123+			REC809570-1	REC809569	
45 Jet (3-cyl.)		(WME-57, 78)		REC1395-8112231	REC1395-9595-1	REC1395-9594	
45 Jet	1994-95	6428681-0B122929	REC155278A1				
45 Jet	1994-95	0B122930+	REC21-42990A10				
50 (50, 500) (4-cyl.)	1967-75	2116318-4357639	REC23014A1				
50 (50, 500) (4-cyl.)	1971-75	2863739-8030089	REC23014A1				
50 (50, 500) (4-cyl.)	1971-75	9001581-9107213	REC23014A1				
50 (50, 500) (4-cyl.)	1967-75	2097445-7068997	REC23014A1				
50 (4-cyl.)		(KA-13A, 18A, 19A, 21A, 21B, 21C, 21D, 24A, 26A, 26B, 27A)		REC1395-2015	REC1399-1473	REC1395-8673	
50 (4-cyl.)		(BA-3A, 3B, 3C, 3D, 4A)	REC1399-5137	REC1395-5198	REC1395-9022		
50 (4-cyl.)		(WMA-1, 3)	REC1395-9024	REC1395-9024	REC1395-9022		
50 (4-cyl.)		(WMK-8)		REC1395-48401	REC1395-8318	REC1395-8673	
50 (3-cyl.)		(WM-13, 13A, 15, 15A, 16, 16A, 18)		REC1395-6200	REC19271-1		
50 (3-cyl.)		(WME-22, 22B, 23, 24, 26, 27, 28, 35, 43, 44, 45, 53, 68, 69)		REC1395-8112231	REC1395-9595-1	REC1395-9594	
50 (3-cyl.)	1986-87	6428681-0B122929	REC155278A1				
50 (3-cyl.)	1986-87	9385911-9469199	REC155278A1				
50 (3-cyl.)	1986-87	7208333-0A721307	REC155278A1				
50 (3-cyl.)	1988-90	0B122930+	REC21-42990A10				
50 (3-cyl.)	1988-90	9469200+	REC21-42990A10				
50 (3-cyl.)	1988-90	0A721308+	REC21-42990A10				
50 (3-cyl.)	1998	0G590000 +	REC21-42990A10				
50 (3-cyl.)	1998	9973100+	REC21-42990A10				
50 (4 T / 4 Stroke / 4 Tempi)	1995-98	0G231123+			REC809570-1	REC809569	
55		(WM-13, 13A, 15, 15A, 16, 16A, 18)		REC1395-6200	REC19271-1		
55		(WME-22, 22B, 23, 24, 26, 27, 28, 35, 43, 44, 45, 57, 58)		REC1395-8112231	REC1395-9595-1	REC1395-9594	
55 (3-cyl.)	1996-97	0D000750+	REC21-42990A10				
55 (3-cyl.)	1996-97	9741042+	REC21-42990A10				
60 (600) (6-cyl.)		(KB-3A)		REC1395-2015	REC1399-1473	REC1395-8673	
60 (3-cyl.)		(WM13- 13A, 15, 15A, 16, 16A, 18)		REC1395-6200	REC19271-1		
60 (3-cyl.)		(WME-22, 22B, 23, 24, 26, 27, 28, 35, 43, 44, 45, 57, 58)		REC1395-8112231	REC1395-9595-1	REC1395-9594	
60 (3-cyl.)	1984-87	6428681-0B122929	REC155278A1				
60 (3-cyl.)	1984-87	9385911-9469199	REC155278A1				
60 (3-cyl.)	1984-87	7208333-0A721307	REC155278A1				
60 (3-cyl.)	1988-90	0B122930+	REC155278A1				
60 (3-cyl.)	1988-90	9469200+	REC155278A1				
60 (3-cyl.)	1988-90	0A721308+	REC155278A1				
65 (650) (4-cyl.)		(KC-2A, 5A, 5B, 5C, 11A, 15A)		REC1395-2015	REC1399-1473	REC1395-8673	
65 (650) (4-cyl.)	1967-69	2119749-2803561	REC23014A1				REC21-30430A1
65 (650) (4-cyl.)	1970-71	2803562-3293183	REC56678A1				REC21-30430A4
65 (650) (3-cyl.)		(WMK-5, 12, 13, 20)		REC1395-6200	REC1395-8318	REC1395-8673	
65 (650) (3-cyl.)		(WM-2)		REC1395-6200	REC1395-8318	REC1395-8673	
65 (650) (3-cyl.)		(WM-4)		REC1395-6200	REC1395-8318	REC1395-8673	
65 (650) (3-cyl.)	1972-76	3293184-4571651	REC56678A1				REC21-30430A3
65 (650) (3-cyl.)	1973-83	8006640+	REC56678A1				REC21-30430A3
65 (650) (3-cyl.)	1973-76	9020074-9135824	REC56678A1				REC21-30430A3
65 (650) (3-cyl.)	1973-76	7013633-7087822	REC56678A1				REC21-30430A3
65 Jet (3-cyl.)		(WME-29, 30, 41, 46, 47, 48, 49, 59, 60, 61, 62, 75, 76, 77, 78, 82, 83, 84, 87, 88)		REC1395-8112231	REC1395-9595-1	REC1395-9594	
65 Jet	1994-98	00283222+	REC21-42990A10				
70 (700) (6-cyl.)		(KA-8A, 12A)		REC1395-2015	REC1399-1473	REC1395-8673	
70 (3-cyl.)		(WM-6, 8, 9, 11)		REC1395-6200	REC1395-8318		
70 (3-cyl.)		(WME-1, 1A, 1B, 4, 5, 6, 6A, 7, 7B, 8, 9, 10, 10A, 15, 15A, 17, 18, 19, 25)		REC1395-8112231	REC1395-9595-1	REC1395-9594	
70 (3-cyl.)	1977-83	4571652-6428680	REC55278A4				REC21-13424A1
70 (3-cyl.)	1977-83	8042350+	REC55278A4				REC21-13424A1
70 (3-cyl.)	1977-83	9135825-9385910	REC55278A4				REC21-13424A1
70 (3-cyl.)	1977-83	7087823-7208332	REC55278A4				REC21-13424A1

MODELO MODEL MODELLO	AÑO YEAR ANNO	Nº SERIE SERIAL Nº. Nº SERIE	MEMBRANA DIAPHRAGM MEMBRANA	KIT JUNTAS GASKET KIT KIT GUARNIZIONI	KIT AGUJAS INLET NEEDLE KIT AGHI	BOYA FLOAT GALLEGGIANTE	KIT VÁLVULA VALVE KIT VALVOLA CHECK
70 (3-cyl.)	1987	0A996142+	REC42909A3				
70 (3-cyl.)	1987	9483121+	REC42909A3				
75 (4-cyl.)		(WM-14, 17)		REC1395-6200	REC19271-1		
75 (4-cyl.) Bomba triangular Triangular pump Pompa triangolare	1984-88	6432901+	REC55278A5				REC21-30430A13
75 (4-cyl.) Bomba triangular Triangular pump Pompa triangolare	1984-88	9393856 +	REC55278A5				REC21-30430A13
75 (4-cyl.) Bomba triangular Triangular pump Pompa triangolare	1984-88	7208573+	REC55278A5				REC21-30430A13
75 (4-cyl.) Bomba cuadrada Square pump Pompa quadrata	1984-88	6432901+	REC21-42990A10				
75 (4-cyl.) Bomba cuadrada Square pump Pompa quadrata	1984-88	9393856+	REC21-42990A10				
75 (4-cyl.) Bomba cuadrada Square pump Pompa quadrata	1984-88	7208573 +	REC21-42990A10				
75 (3-cyl.)		(WME-1, 1A, 1B, 4, 5, 6, 6A, 7, 7B, 8, 9, 10, 10A, 15, 15A, 17, 18, 19, 25, 29, 30, 31, 41, 46, 47, 48, 49, 59, 60, 61, 62, 75, 76, 77, 78, 82, 83, 84, 87, 88)		REC1395-8112231	REC1395-9595-1	REC1395-9594	
75 (3-cyl.)	1990-98	0C222000+	REC42909A3				
75 (3-cyl.)	1990-98	9589039+	REC42909A3				
75 (3-cyl.)	1990-98	0C222000+	REC21-42990A10				
75 (3-cyl.)	1990-98	9589039+	REC21-42990A10				
75 4T	2000+	G960500+		REC67F-W0093-00		REC804184	
80 (800) (6-cyl.)		KA-10A, 11A, 14A, 16A, KC-3A		REC1395-2015	REC1399-1473	REC1395-8673	
80 (800) (4-cyl.)	1969-72	2559001-2670574	REC23014A1				REC21-30430A1
80 (800) (4-cyl.)	1969-72	2783253-2856331	REC56678A1				REC21-30430A3
80 (80, 800) (4-cyl.)		(KD-4A)		REC1395-48401	REC1395-8318	REC1395-8673	
80 (80, 800) (4-cyl.)		(WM-5, 10, 12, 14, 17)		REC1395-6200	REC1395-8318		
80 (80, 800) (4-cyl.)	1978-83	4831999-6432900	REC55278A5				REC21-30430A13
80 (80, 800) (4-cyl.)	1978-83	8050200+	REC55278A5				REC21-30430A13
80 (80, 800) (4-cyl.)	1978-83	9177626-9393855	REC55278A5				REC21-30430A13
80 (80, 800) (4-cyl.)	1978-83	7110998-7208572	REC55278A5				REC21-30430A13
80 (3-cyl.)		(WME-1, 1A, 1B, 4, 5, 6, 6A, 7, 7B, 8, 9, 10, 10A, 15, 15A, 17, 18, 19, 25)		REC1395-8112231	REC1395-9595-1	REC1395-9594	
80 (3-cyl.)	1987	0A996142+	REC42909A3				
80 (3-cyl.)	1987	9483121+	REC42909A3				
80 Jet (4-cyl.)	1994-98	(WME-32, 32A, 50, 79)		REC1395-8112231	REC1395-9595-1	REC1395-9594	
80 Jet	1994-98	0D283222+	REC21-42990A10				
85 (850) (6-cyl.)		(KA-10A, 11A, 14A, 16A, KC-3A)		REC1395-2015	REC1399-1473	REC1395-8673	
85 (850) (4-cyl.)		(WM-3, 5)		REC1395-6200	REC1395-8318		
85 (850) (4-cyl.)		(WMK-4, 16, 17)		REC1395-48401	REC1395-8318	REC1395-8673	
85 (850) (4-cyl.)	1973-77	3493913-4831998	REC55278A5				REC21-30430A13
85 (850) (4-cyl.)	1973-77	8005440-8050199	REC55278A5				REC21-30430A13
85 (850) (4-cyl.)	1973-77	9011604-9177625	REC55278A5				REC21-30430A13
85 (850) (4-cyl.)	1973-77	7010108-7110997	REC55278A5				REC21-30430A13
90 (900) (6-cyl.)		(KC-6A)		REC1395-2015	REC1399-1473	REC1395-8673	
90 (90, 900) (6-cyl.)		(WMK-23, 27, 30, 35, 39)		REC1395-48401	REC1395-8318	REC1395-8673	
90 (90, 900) (6-cyl.)	1978-79	4845301-5299505	REC89031A1				REC21-30430A13
90 (90, 900) (6-cyl.)	1978-79	7111698-7123762	REC89031A1				REC21-30430A13
90 (6-cyl.) Bomba triangular Triangular pump Pompa triangolare	1979-86	5299506+	REC89031A3				REC21-30430A14
90 (6-cyl.) Bomba triangular Triangular pump Pompa triangolare	1979-83	8060545+	REC89031A3				REC21-30430A14
90 (6-cyl.) Bomba triangular Triangular pump Pompa triangolare	1979-86	7147088+	REC89031A3				REC21-30430A14
90 (6-cyl.) Bomba cuadrada Square pump Pompa quadrata	1979-86	5299506+	REC21-42990A10				
90 (6-cyl.) Bomba cuadrada Square pump Pompa quadrata	1979-83	8060545+	REC21-42990A10				

MODELO MODEL MODELLO	AÑO YEAR ANNO	Nº SERIE SERIAL Nº. Nº SERIE	MEMBRANA DIAPHRAGM MEMBRANA	KIT JUNTAS GASKET KIT KIT GUARNIZIONI	KIT AGUJAS INLET NEEDLE KIT AGHI	BOYA FLOAT GALLEGGIANTE	KIT VÁLVULA VALVE KIT VALVOLA CHECK
90 (6-cyl.) Bomba cuadrada Square pump Pompa quadrata	1979-86	7147088+	REC21-42990A10				
90 (3-cyl.)		(WME-1, 1A, 1B, 4, 5, 6, 6A, 7, 7B, 8, 9, 10, 10A, 15, 15A, 17, 18, 19, 25, 29, 30, 31, 41, 46, 47, 48, 49, 59, 60, 61, 62, 75, 76, 77, 78, 82, 83, 84, 87, 88)		REC1395-8112231	REC1395-9595-1	REC1395-9594	
90 (3-cyl.)	1987	0A996142+	REC21-42990A10				
90 (3-cyl.)	1987	9483121+	REC21-42990A10				
90 (3-cyl.)	1987	0A996142+	REC42909A3				
90 (3-cyl.)	1987	9483121+	REC42909A3				
90 (4 T / 4 Stroke / 4 Tempi)	2000+	G960500+		REC67F-W0093-00		REC804184	
95 (950) (6-cyl.)		(KC-6A)		REC1395-2015	REC1399-1473	REC1395-8673	
95 (950) (6-cyl.)	1966-67	1869776-2318585	REC23014A1				REC21-30430A1
100 (1000) (6-cyl.)		(KC-1A, 7A, 7B, 10A, 14A)		REC1395-2015	REC1399-1473	REC1395-8673	
100 (1000) (6-cyl.)		(KD-1A, 1B, 2A, 3A)		REC1395-48401	REC1395-8318	REC1395-8673	
100 (1000SS/BP) (6-cyl.)	1968-69	2318586-3253111	REC23014A1				REC21-30430A1
100 (4-cyl.)		(WME-11, 14, 20, 20A, 21, 21A, 32, 32A, 50, 79)		REC1395-8112231	REC1395-9595-1	REC1395-9594	
100 (4-cyl.)	1988-93	0B209468-0D283221	REC42909A3				
100 (4-cyl.)	1988-93	9523034-9793576	REC42909A3				
100 (4-cyl.)	1988-93	0B209468-0D283221	REC21-42990A10				
100 (4-cyl.)	1988-93	9523034-9793576	REC21-42990A10				
100 (4-cyl.)	1994-98	0D283222+	REC21-42990A10				
100 (4-cyl.)	1994-98	9793577+	REC21-42990A10				
110 (1100) (6-cyl.)		(KC-1A, 7A, 7B, 10A, 14A)		REC1395-2015	REC1399-1473	REC1395-8673	
110 (1100) (6-cyl.)	1966-67	1870204-2314955	REC23014A1				REC21-30430A1
115 (1150) (6-cyl.)	1970-77	2836019-4855152	REC155278A1	REC21-30430A3			
115 (1150) (6-cyl.)	1973-77	8008665-8051949	REC155278A1	REC21-30430A3			
115 (1150) (6-cyl.)	1973-77	7010763-7112248	REC155278A1	REC21-30430A3			
115 (115, 1150) (6-cyl.)		(KD-6A, 6B)		REC1395-48401	REC1395-8318	REC1395-8673	
115 (115, 1150) (6-cyl.)		(WMK-3, 10, 15, 18, 26, 28, 32, 36, 40, 41)		REC1395-48401	REC1395-8318	REC1395-8673	
115 (115, 1150) (6-cyl.)	1978-79	4855153-5314655	REC89031A1	REC21-30430A7			
115 (115, 1150) (6-cyl.)	1978-79	8051950-8061119	REC89031A1	REC21-30430A7			
115 (115, 1150) (6-cyl.)	1978-79	7112248-7131212	REC89031A1	REC21-30430A7			
115 Bomba triangular Triangular pump Pompa triangolare	1979-88	5314656+	REC89031A3				REC21-30430A14
115 Bomba triangular Triangular pump Pompa triangolare	1979-83	8061120+	REC89031A3				REC21-30430A14
115 Bomba triangular Triangular pump Pompa triangolare	1979-88	7131213+	REC89031A3				REC21-30430A14
115 Bomba cuadrada Square pump Pompa quadrata	1979-88	5314656+	REC21-42990A10				
115 Bomba cuadrada Square pump Pompa quadrata	1979-83	8061120+	REC21-42990A10				
115 Bomba cuadrada Square pump Pompa quadrata	1979-88	7131213+	REC21-42990A10				
115 (4-cyl.)		(WME-11, 14, 20, 20A, 21, 21A, 33, 40, 40A)		REC1395-8112231	REC1395-9595-1	REC1395-9594	
115 (4-cyl.)	1989-93	0C100000-0D283221	REC42909A3				
115 (4-cyl.)	1989-93	9559771-9793576	REC42909A3				
115 (4-cyl.)	1989-93	0C100000-0D283221	REC21-42990A10				
115 (4-cyl.)	1989-93	9559771-9793576	REC21-42990A10				
115 (4-cyl.)	1994-98	0D283222+	REC21-42990A10				
115 (4-cyl.)	1994-98	9793577+	REC21-42990A10				
125 (1250) (6-cyl.)		(KD-1A, 1B, 2A, 3A)		REC1395-48401	REC1395-8318	REC1395-8673	
125 (1250) (6-cyl.)	1968-69	2314956-2839368	REC23014A1				REC21-30430A1
125 (1250BP) (6-cyl.)	1968	2400058-2641954	REC23014A1				REC21-30430A1
125 (4-cyl.)		(WME-34, 52, 81)		REC1395-8112231	REC1395-9595-1	REC1395-9594	
125 (4-cyl.)	1994-98	0D283222+	REC21-42990A10				
135 (1350) (6-cyl.)		(KD-7A, 7B)		REC1395-48401	REC1395-8318	REC1395-8673	
135 (1350) (6-cyl.)		(WMK-4)		REC1395-48401	REC1395-8318	REC1395-8673	
135 (1350) (6-cyl.)	1969	2839369-3293233	REC155278A1				REC21-30430A3
140 (1400) (6-cyl.)	1970-71	3293234-3502805	REC155278A1				REC21-30430A3
140 (140, 1400) (6-cyl.)		(WMK-7, 9, 25, 29)		REC1395-48401	REC1395-8318	REC1395-8673	
140 (140, 1400) (6-cyl.)	1978-79	4865678-5327662	REC89031A1				REC21-30430A7
140 (140, 1400) (6-cyl.)	1978-79	8052650-8052879	REC89031A1				REC21-30430A7

MODELO MODEL MODELLO	AÑO YEAR ANNO	Nº SERIE SERIAL Nº. Nº SERIE	MEMBRANA DIAPHRAGM MEMBRANA	KIT JUNTAS GASKET KIT KIT GUARNIZIONI	KIT AGUJAS INLET NEEDLE KIT AGHI	BOYA FLOAT GALLEGGIANTE	KIT VÁLVULA VALVE KIT VALVOLA CHECK
140 (140, 1400) (6-cyl.)	1978-79	7112773-7132512	REC89031A1				REC21-30430A7
140 (6-cyl.)	1980-81	5327663+	REC89031A3				REC21-30430A14
140 (6-cyl.)	1981	8066065+	REC89031A3				REC21-30430A14
140 (6-cyl.)	1980-81	7112773-7132512	REC89031A3				REC21-30430A14
150 (1500) (6-cyl.)		(WMK-7, 9, 25, 29)		REC1395-48401	REC1395-8318	REC1395-8673	
150 (1500) (6-cyl.)	1973-77	4865678-5327662	REC155278A1				REC21-30430A3
150 (1500) (6-cyl.)	1973-77	8052650-8052879	REC155278A1				REC21-30430A3
150 (1500) (6-cyl.)	1973-77	7112773-7132512	REC155278A1				REC21-30430A3
150 (1500XS) (6-cyl.)	1978	5327663+	REC89031A2				
V-105 Jet	1994-95	0D08200-0G303045 (WMH-13, 23, 31)		REC8107492	REC1395-811690-1		
V-105 Jet	1996+	0G303046+ (WMV-2, 2A)		REC8107492	REC1395-811690-1		
V-135 Bomba triangular Triangular pump Pompa triangolare	1986-88	0A904646-0C100860 (WH-33, 40)	REC89031A2	REC1395-6452	REC1395-7824	REC1395-7623	
V-135 Bomba cuadrada Square pump Pompa quadrata	1986-88	0A904646-0C100860 (WH-32, 35, 38)	REC21-42990A10	REC1395-6452	REC1395-7824	REC1395-7623	
V-135 Bomba triangular Triangular pump Pompa triangolare	1989-90	0C100861-0C239552 (WH-35, 38)	REC89031A2	REC1395-6452	REC1395-7824	REC1395-7623	
V-135 Bomba cuadrada Square pump Pompa quadrata	1989-90	0C100861-0C239552 (WH-40, 48)	REC21-42990A10	REC1395-6452	REC1395-7824	REC1395-7623	
V-135	1991	0C239553-0D081999 (WMH-8, 8A)	REC89031A2	REC8107492	REC1395-7824		
V-135 Bomba triangular Triangular pump Pompa triangolare	1992-95	0D082000-0G303045 (WMH-12A, 12B)	REC89031A2	REC8107492	REC1395-7824		
V-135 Bomba cuadrada Square pump Pompa quadrata	1992-95	0D082000-0G303045 (WMH-28, 30)	REC21-42990A10	REC8107492	REC1395-7824		
V-135	1996-98	0G303046-0G760299 (WMV-1, 1A)	REC89031A2	REC8107493	REC1395-7824		
V-135		0G760300+ (WMV-1A)	REC89031A2	REC8107493	REC1395-7824		
V-135		(WMH 21, 22, 23, 24, 25, 28)		REC1395-811691-2			
V-135 DFI	1998	0G590000+	REC21-42990A10				
V-140 Jet	1994-95	0G82000-0G303045 (WMH-16, 21, 34, 39)		REC8107492	REC1395-811690-1		
V-140 Jet	1996-98	0G303046-0G760299 (WMV-5, 5A)		REC8107493	REC1395-811690-1		
V-140 Jet	1996-98	0G760300+ (WMV-5A)		REC8107493	REC1395-811690-1		
V-150 (1500) Bomba triangular Triangular pump Pompa triangolare	1978-85	4868998+	REC89031A2				
V-150 (1500) Bomba cuadrada Square pump Pompa quadrata	1978-85	4868998+	REC21-42990A10				
V-150 (150, 1500)	1978-98	(WH-9)		REC1395-6452		REC1395-7623	
V-150 (150, 1500)	1978-98	(WH-12)		REC1395-6452	REC1395-7824	REC1395-7623	
V-150 (150, 1500)	1978-98	(WH-29)		REC1395-6452	REC1395-7824	REC1395-7623	
V-150	1986-88	0A904646-0C239552 (WH-35, 38, 40, 48)		REC1395-6452	REC1395-7824	REC1395-7623	
V-150	1991	0C239553-0D081999 (WMH-1, 7)		REC8107492	REC1395-811690-1		
V-150	1992-95	0D08200-0G303045 (WMH-13, 13B, 23, 31)		REC8107492	REC1395-811690-1		
V-150	1996-98	0G303046-0G760299 (WMV-2, 2A)		REC8107492	REC1395-811690-1		
V-150		0G760300+ (WMV-3A)		REC8107492	REC1395-811690-1		
V-150 DFI	1998	0G590000+	REC21-42990A10				
V-150 EFI	1993-98		REC21-42990A10				
V-150 (XR4, MAGII)	1988	0B242885-0C100860 (WH-41A)	REC21-42990A10	REC1395-6452	REC1395-7824	REC1395-7623	
V-150 (XR4, MAGII)	1989	0C100861-0C239552 (WH-41, 41A)	REC21-42990A10	REC1395-6452	REC1395-7824	REC1395-7623	
V-150 (XR4, MAGII)	1991	0C239553-0D081999 (WMH-6)	REC21-42990A10	REC8107492	REC1395-811690-1		
V-150 (XR4, MAGII)	1992-95	0D082000-0G303045 (WMH-14A, 25, 32A)	REC21-42990A10	REC8107492	REC1395-811690-1		
V-150 (XR4, MAGII)	1996-98	0G303046-0G760299 (WMV-3, 3A)	REC21-42990A10	REC8107492	REC1395-811690-1		
V-150 (XR4, MAGII)	1996-98	0G762000+ (WMV-3A)	REC21-42990A10	REC8107492	REC1395-811690-1		
V-150		(WMH 21, 22, 23, 24, 25, 28)		REC1395-811691-2			
V-175 Bomba triangular Triangular pump Pompa triangolare	1976-88	4301235-0C100860 (WH-13)	REC21-42990A10	REC1395-6452	REC1395-7824	REC1395-7623	
V-175 Bomba triangular Triangular pump Pompa triangolare	1976-79	8058870-8064249 (wh-13)	REC21-42990A10	REC1395-6452	REC1395-7824	REC1395-7623	

MODELO MODEL MODELLO	AÑO YEAR ANNO	Nº SERIE SERIAL Nº. Nº SERIE	MEMBRANA DIAPHRAGM MEMBRANA	KIT JUNTAS GASKET KIT KIT GUARNIZIONI	KIT AGUJAS INLET NEEDLE KIT AGHI	BOYA FLOAT GALLEGGIANTE	KIT VÁLVULA VALVE KIT VALVOLA CHECK
V-175 Bomba cuadrada Square pump Pompa quadrata	1976-88	4301235-0C100860 (WH-1, 4, 7, 28, 39, 46)	REC89031A2	REC1395-6452	REC1395-7824	REC1395-7623	
V-175 Bomba cuadrada Square pump Pompa quadrata	1976-79	8058870-8064249 (WH-13)	REC89031A2	REC1395-6452		REC1395-7623	
V-175 Bomba triangular Triangular pump Pompa triangolare	1976-88	4301235-0C100860 (WH-7A)	REC21-42990A10	REC1395-6452		REC1395-7623	
V-175 Bomba triangular Triangular pump Pompa triangolare	1976-79	8058870-8064249 (WH-7A)	REC21-42990A10	REC1395-6452	REC1395-7824	REC1395-7623	
V-175 Bomba cuadrada Square pump Pompa quadrata	1976-88	4301235-0C100860 (WH-17)	REC89031A2	REC1395-6452	REC1395-7824	REC1395-7623	
V-175 Bomba cuadrada Square pump Pompa quadrata	1976-79	8058870-8064249 (WH-17)	REC89031A2	REC1395-6452	REC1395-7824	REC1395-7623	
V-175 Bomba triangular Triangular pump Pompa triangolare	1976-88	4301235-0C100860 (WH-17R, 30, 34)	REC21-42990A10	REC1395-6452	REC1395-7824	REC1395-7623	
V-175 Bomba triangular Triangular pump Pompa triangolare	1976-79	8058870-8064249 (WH-17R, 30, 34)	REC21-42990A10	REC1395-6452	REC1395-7824	REC1395-7623	
V-175	1989-90	0C100861-0C239552 (WH-34)		REC1395-6452	REC1395-7824	REC1395-7623	
V-175	1991	0C239553-0D81999 (WMH-2, 11)		REC8107492	REC1395-811690-1		
V-175	1992-95	0D082000-0G303045 (WMH-15, 22, 33)		REC8107492	REC1395-811690-1		
V-175	1996-98	0G303046-0G760299 (WMV-4, 4A)		REC8107493	REC1395-811690-1		
V-175	1991	0G760300+ (WMV-4A)		REC8107493	REC1395-811690-1		
V-175	1991	0G760300+		REC1395-6452	REC1395-7824	REC1395-7623	
V-175 EFI	1991-98		REC21-42990A10				
V-175		(WMH 21, 22, 23, 24, 25, 28)		REC1395-811691-2			
V-200 EFI	1989-98		REC21-42990A10				
V-200 (200, 2000)	1978-88	4839034-0C100860 (WH-3)	REC89031A2	REC1395-6452	REC1395-7824		
V-200 (200, 2000)	1980-81	8061595-8065672 (WH-3)	REC89031A2	REC1395-6452	REC1395-7824	REC1395-7623	
V-200 (200, 2000)	1978-88	4839034-0C100860 (WH-3A, 11)	REC89031A2	REC1395-6452		REC1395-7623	
V-200 (200, 2000)	1980-81	8061595-8065672 (WH-3A, 11)	REC89031A2	REC1395-6452		REC1395-7623	
V-200 (200, 2000)	1978-88	4839034-0C100860 (WH-14, 16, 18, 20, 28, 39, 46)	REC89031A2	REC1395-6452	REC1395-7824	REC1395-7623	
V-200 (200, 2000)	1980-81	8061595-8065672 (WH--14, 16, 18, 20, 28, 39, 46)	REC89031A2	REC1395-6452	REC1395-7824	REC1395-7623	
V-200	1989-90	0C100861-0C291519 (WH-46)		REC1395-6452	REC1395-7824	REC1395-7623	
V-200	1991	0C291520-0D081999 (WMH-3)		REC8107492	REC1395-811690-1		
V-200	1992-95	0D082000-0G303045 (WMH-16, 21, 34, 39)		REC8107492	REC1395-811690-1		
V-200	1996-98	0G303046-0G760299 (WMV.5, 5A)		REC8107493	REC1395-811690-1		
V-200	1996-98	0G760300+ (WMV-5A)		REC8107493	REC1395-811690-1		
V-200	1982-83	6073192-6357229	REC90363A1				REC21-30430A11
V-200	1983-84	6357230-6625220	REC89031A4				
V-200	1985-88	6625221+	REC21-42990A10				
V-200		(WMH 21, 22, 23, 24, 25, 28)		REC1395-811691-2			
V-200 DFI	1998	0G590000+	REC21-42990A10				
V-220 Laser	1987-88	0B117316+	REC21-42990A10				
V-225 (2.4L)	1980-81	5628028 + (WH-5, 20)	REC90363A1	REC1395-6452	REC1395-7824	REC1395-7623	REC21-30430A11
V-225 (3.0L)	1994-98	0D280813-0G303045 (WMH-19, 46, 47)	REC21-42990A10	REC8107492	REC1395-811690-1		
V-225 (3.0L)	1994-98	0G303046-0G760299(WMV-7, 13)	REC21-42990A10	REC8107493	REC1395-811690-1		
V-225 (3.0L)	1994-98	0G76300+ (WMV-13)	REC21-42990A10	REC8107493	REC1395-811690-1		
V-225 (3.0L)	1994-98	0G245605-0G303045 (WMH-45)	REC21-42990A10	REC8107493	REC1395-811690-1		
V-225 (3.0L)	1994-98	0G303046-0G760299 (WMH-6, 11)	REC21-42990A10	REC8107493	REC1395-811690-1		
V-225 (3.0L)	1994-98	ALL (WMV-11)	REC21-42990A10	REC8107493	REC1395-811690-1		
V-225 (3.0L)	1994-98	0G760300+ (WMV-11A)	REC21-42990A10	REC8107493	REC1395-811690-1		
V-250 (275) (3.4L)	1989-94	0C101891+ (WD-8A, 9, 9A)	REC21-42990A10				
V-225 DFI (3.0L)	1998	0G590000+	REC21-42990A10				
V-225 EFI (3.0L)	1995-98	0G129222+	REC21-42990A10				
V-250 EFI (3.0L)	1995-98	0G129222+	REC21-42990A10				
V-275 (3.4L)	1989-94	0C101891+	REC21-42990A10				
V-300 (3.4L)	1980-87	5611648+ (WD-3, 5)	REC89031A2				

TERMOSTATO
THERMOSTAT
TERMOSTATO

Ref.	R.O.	°C	°F
REC14586	14586	48.8	120

Ref.	R.O.	°C	°F
REC6F5-12411-03	75692	61,6	143
	814554T01		

Ref.	R.O.	°C	°F
REC850055001	850055	43,3	110
	8500550014		

Ref.	R.O.	°C	°F
REC895338	F97068-2	54,4	130
	895338		

Ref.	R.O.	°C	°F
REC8M0067307	885599004	54,4	130

Ref.	R.O.	°C	°F
REC833072003	833072003	61,6	143

Ref.	R.O.	°C	°F
REC67F-12411-01	855676004		

MOTORES / ENGINES / MOTORI
75 EFI, 80 EFI, 90 EFI, 100 EFI
(4T / 4 Strokes / 4 Tempi)

Ref.	R.O.	°C	°F
REC833072004	833072004	61,6	143

Ref.	R.O.	°C	°F
REC6E5-12411-02	11919M		

NEW

Ref.	R.O.	°C	°F
RM804540	804540	52	126

MOTORES / ENGINES / MOTORI
2.5, 4, 5, 6 HP (4T / 4 Strokes / 4 Tempi)

Ref.	R.O.	°C	°F
RM855676005	855676005	71	160

MOTORES / ENGINES / MOTORI
8, 9.9 HP (4T / 4 Strokes / 4 Tempi)

Ref.	R.O.	°C	°F
RM855676002	855676002	60	140
REC855676002			

MOTORES / ENGINES / MOTORI
8 (209cc)
15 (2 cyl), 20, 25 HP
(4T / 4 Strokes / 4 Tempi)

Ref.	R.O.	°C	°F
REC825212T02	855676003	60	140
	855676003		
	855676A1		

MOTORES / ENGINES / MOTORI
13.5, 15, 25, 30, 40, 45, 50 HP
(4T / 4 Strokes / 4 Tempi)

Ref.	R.O.	°C	°F
RM880640508	880640508		

MOTORES / ENGINES / MOTORI
Verado

4 TIEMPOS STROKES — GUÍA TERMOSTATO / THERMOSTAT GUIDE / GUIDE TERMOSTATO

HP	SERIE / SERIAL / SERIE	TERMOSTATO / THERMOSTAT / TERMOSTATO
2HP, 2.5HP (Carb)	0R131842 +	**RM804540**
3.5HP (Carb)	0R131842 +	**RM804540**
4HP, 5HP, 6HP	0P073456 +	**RM804540**
8HP (209 cc)	0P325500 +	**RM855676002**
8HP (Bodensee)	0P086824 - 0P400999	**REC825212T02**
9.9HP (209 cc)	0P325500 +	**RM855676002**
9.9HP (323 cc)	0P075166 - 0P400999	**REC825212T02**
13.5 (International)	0P134638 +	**REC825212T02**
15HP	0P9973100 +	**REC825212T02**
15HP (Carb) (2 Cyl)	0R235949 +	**RM855676002**
15HP (SEAPRO)	0R123565 +	**RM855676002**
20HP (Carb) (2 Cyl)	0R235168 +	**RM855676002**
25HP	0P9973100 +	**REC825212T02**
25HP (SEAPRO) (EFI)	0R051710 +	**RM855676002**
30HP	0P017000 +	**REC825212T02**
30HP (Carb) (3 Cyl) (EFI)	0P153500 - 0P400999	**REC825212T02**
40HP	994408 +	**REC825212T02**
40HP (Carb) (3 Cyl)	0P153500 - 0P400999	**REC825212T02**
40HP (4Cyl)	0P094500 - 0P206999	**REC14586**
40HP (EFI) (3 Cyl)	0P401000 - 0P400999	**REC825212T02**
40HP (EFI) (4 Cyl)	0P401000 +	**REC14586**
40HP ITALY	0P017000 - 0P094499	**REC825212T02**
45HP Bodensee	9944807 +	**REC825212T02**
50HP (BIGFOOT)	9944807 +	**REC825212T02**
50HP (EFI)	0P153500 +	**REC14586**
50HP (4 Cyl)	0P94500 - 0P206999	**REC14586**
60HP (4 Cyl)	0P94500 - 0P206999	**REC14586**
60HP (EFI) (4 Cyl)	0P153500 +	**REC14586**
75HP (EFI) (Bodensee)	0G960500 - 0T800999	**REC825212T02**
90HP (EFI)	0G960500 - 0T800999	**REC825212T02**
100HP (EFI)	1B227077 - 1B366822	**REC67F-12411-01**
135HP (VERADO)	0P419487 +	**RM880640508**
150HP (VERADO)	0P419487 +	**RM880640508**
175HP (VERADO)	0P419487 +	**RM880640508**
200HP (VERADO) 4 Cyl	0P514869 +	**RM880640508**
200HP (VERADO) 4 Cyl	0P514869 +	**RM880640508**
200HP (VERADO) 6 Cyl	0P409357 +	**RM880640508**
225HP (VERADO) 6 Cyl	0P409357 +	**RM880640508**
250HP (VERADO) 6 Cyl	0P409357 +	**RM880640508**
275HP (VERADO) 6 Cyl	0P464488 +	**RM880640508**
300HP (VERADO) 6 Cyl	0P520553 +	**RM880640508**
350HP (VERADO) 6 Cyl	2B141617+	**RM880640508**
400HP (VERADO) 6 Cyl	2B141124+	**RM880640508**

CUERPO TERMOSTATO / THERMOSTAT HOUSING / CORPO TERMOSTATO

Ref.	R.O.
REC892864T04	892864T04

NEW

MOTORES / ENGINES / MOTORI

135 - 400 Verado (Todas / All / Tutti)

KITS TERMOSTATO / THERMOSTAT KITS / KIT TERMOSTATO

Ref.	R.O.
REC14586A3	14586A3

2 TIEMPOS STROKES — GUÍA TERMOSTATO / THERMOSTAT GUIDE / GUIDE TERMOSTATO

HP	SERIE / SERIAL / SERIE	KIT TERMOSTATO / THERMOSTAT KIT / KIT TERMOSTATO	TERMOSTATO / THERMOSTAT / TERMOSTATO
4A/ 5C/ 6C-D	Todas / All / Tutti		**REC6E5-12411-02**
6HP	9461526 +	**REC14586A3**	**REC14586**
8HP (C/K) W8 (Todas / All / Tutti)			**REC6E5-12411-02**
8HP	9461526 +	**REC14586A3**	**REC14586**
9.9HP	9461526 +	**REC14586A3**	**REC14586**
15HP	9542620 +	**REC14586A3**	**REC14586**
15 Sea Pro	9927000 +	**REC14586A3**	**REC14586**
Super 15	9507381 +	**REC14586A3**	**REC14586**
20HP	9467988 +	**REC14586A3**	**REC14586**
25HP (2Cyl)	9467988 +	**REC14586A3**	**REC14586**
25 Sea Pro	9507381 +	**REC14586A3**	**REC14586**
30HP (2Cyl)	9855139 +	**REC14586A7**	**REC895338**
35HP	9384476 +	**REC75692A6**	**REC6F5-12411-03**
40HP (2Cyl)	9855139 +	**REC14586A7**	**REC895338**
40HP (3Cyl)	9973100 +	**REC850055A2**	**REC850055001**
50HP (3Cyl)	9482600 - 9671686	**REC75692A7**	**REC6F5-12411-03**
50HP (3Cyl)	9682500 - 9740999		**REC14586**
50HP (3Cyl)	9741000 - 9973099		**REC14586**
50HP (3Cyl)	9973100 +	**REC850055A2**	**REC850055001**
55HP (3Cyl)	9682500 - 9740999		**REC14586**
55HP (3Cyl)	9741000 - 9973099		**REC14586**
55HP (3Cyl)	9973100 +	**REC850055A2**	**REC850055001**
60HP (3Cyl)	9482600 - 9671686	**REC75692A7**	**REC6F5-12411-03**
60HP (3Cyl)	9682500 - 9740999		**REC14586**
60HP (3Cyl)	9741000 - 9973099		**REC14586**
60HP (3Cyl)	9973100 +	**REC850055A2**	**REC850055001**
70HP (3Cyl)	9483121 +	**REC803061T1**	**REC14586**
75HP (3Cyl)	9589039 +	**REC803061T1**	**REC14586**
80HP (3Cyl)	9483121 +	**REC803061T1**	**REC14586**
90HP (3Cyl)	9483121 +	**REC803061T1**	**REC14586**
100HP (4Cyl)	9523034 +	**REC803061T1**	**REC14586**
115HP (4Cyl)	9559771 +	**REC803061T1**	**REC14586**
125HP (4Cyl)	9793577 +	**REC803061T1**	**REC14586**
V-135	0A904646 +		**REC6F5-12411-03**
V-150	0A904646 +	**REC75692Q2**	**REC6F5-12411-03**
XR-4	0C239553 - 0D081999	**REC75692Q2**	**REC6F5-12411-03**
Magnum II	0C239553 - 0D081999	**REC75692Q2**	**REC6F5-12411-03**
XR-6	0D082000 +	**REC75692Q2**	**REC6F5-12411-03**
Magnum III	0D082000 +	**REC75692Q2**	**REC6F5-12411-03**
V-175	0C100861 +	**REC75692Q2**	**REC6F5-12411-03**
V-200	6435503 +	**REC75692Q2**	**REC6F5-12411-03**

Ref.	R.O.
REC850055A2	850055A2

Ref.	R.O.
REC75692A7	75692A7

Ref.	R.O.
REC803061T1	803061T1

Ref.	R.O.
REC14586A7	14586A7

Ref.	R.O.
REC75692Q2	75692Q2

Ref.	R.O.
REC75692A6	75692A6

JUNTAS TERMOSTATO
THERMOSTAT GASKET
GUARNIZIONI TERMOSTATO

Ref.	R.O.
REC6E9-12414-A1	27-83336M

MOTORES / ENGINES / MOTORI
MARINER (sólo / only / solo)
40 A/B (K40)

Ref.	R.O.
REC27-62386001	27-62386

Para termostatos de Ø 1".
For thermostat Ø 1".
Per termostato Ø 1".

Ref.	R.O.
PAF8-05010005	27-853702005

NEW

MOTORES / ENGINES / MOTORI
4 - 25 HP
(4T / 4 Strokes / 4 Tempi)

Ref.	R.O.
REC27-19205002	27-19205-1

MOTORES / ENGINES / MOTORI
6, 8, 9.9, 10, 15 HP

Ref.	R.O.
REC27-78690002	27-78690, 27-78690002

MOTORES / ENGINES / MOTORI
V6

Ref.	R.O.
PAF15-07010022	27-824853

NEW

MOTORES / ENGINES / MOTORI
8 Bodensee
9.9
13.5
15
25
30 (Carb) (EFI)
40 (Carb) (EFI) Italy
45 Bodensee
50 (EFI, Bigfoot)
60 (EFI)

Ref.	R.O.
REC655-12414-A1	27-81031M

NEW

MOTORES / ENGINES / MOTORI
8A / 20C / 25C, K / 28 / 30A / W30

Ref.	R.O.
REC682-12414-A1	27-83940M
REC27-83940	27-83940M

NEW

MOTORES / ENGINES / MOTORI
9.9C
15C / K
W15

Ref.	R.O.
REC27-14318005	27-14318-3

MOTORES / ENGINES / MOTORI
20 Jet
20, 25 HP (2cyl)

Ref.	R.O.
REC27-66847	27-66847

MOTORES / ENGINES / MOTORI
30, 40 HP (2 cyl)

Ref.	R.O.
REC6E9-12414-A1	27-814555M

NEW

MOTORES / ENGINES / MOTORI
40 (Twin Carb) (con inyección de aceite / with oil injection / con iniezione dell'olio)
W40 (w/Marathon)

Ref.	R.O.
REC663-12414-00	27-81266M

NEW

MOTORES / ENGINES / MOTORI
MARINER (sólo / only / solo)
48 / W-48
55 / W-55
60 (2 cyl)

Ref.	R.O.
REC27-430068	27-43006-8

MOTORES / ENGINES / MOTORI
65-80 Jet
75-90 HP (3 cyl)
115-125 HP (4-cyl)

JUNTAS TAPA
COVER GASKET
GUARNIZIONI COPPERCHIO

Ref.	R.O.
PAF8-05010004	27-834952001

NEW

MOTORES / ENGINES / MOTORI
8, 9.9 HP (209 cc)
(4T / 4 Strokes / 4 Tempi)

Ref.	R.O.
PAF15-07010018	27-834952

NEW

MOTORES / ENGINES / MOTORI
8, 9.9, 13.5, 15 HP
(4T / 4 Strokes / 4 Tempi)

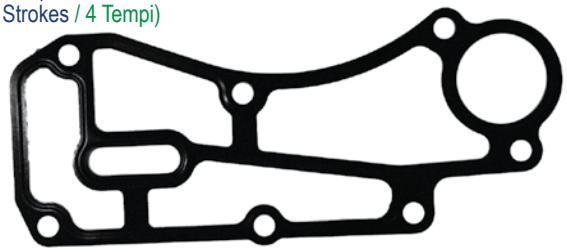

Ref.	R.O.
PAF25-05010111	27-830298

NEW

MOTORES / ENGINES / MOTORI
25 HP
(4T / 4 Strokes / 4 Tempi)

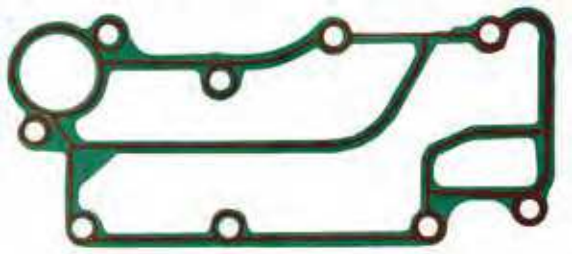

Ref.	R.O.
REC27-8128671	27-812867-1

MOTORES / ENGINES / MOTORI
Para R.O. / For OEM / Per R.O.: 19074

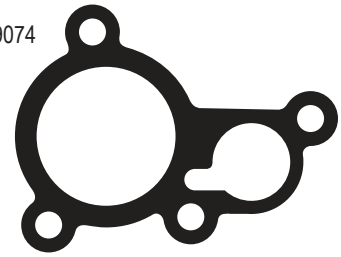

Ref.	R.O.
REC27-827284	27-827284

MOTORES / ENGINES / MOTORI
Para R.O. / For OEM / Per R.O.: GLM13142

Ref.	R.O.
REC27-8128672	27-8128672

MOTORES / ENGINES / MOTORI
Para R.O. / For OEM / Per R.O.: 19074-1

COMPONENTES CUERPO TERMOSTATO
THERMOSTAT HOUSING COMPONENTS
COMPONENTI CORPO TERMOSTATO

CONECTOR CULATA ESTRIBOR
FITTING STB
RACCORDO TESTATA TRIBORDO

Ref.	R.O.
REC22-687271	22-687271

CONECTOR CULATA BABOR
FITTING PORT
RACCORDO TESTATA BABORDO

Ref.	R.O.
REC22-68728	22-68728

MUELLES
SPRINGS
MOLLA

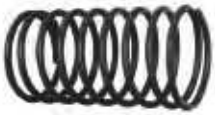

Ref.	R.O.	Motores / Engines / Motori
REC24-64878	24-64878	135-200 HP V6
REC24-47968	24-47968	30, 35, 40 (400) (402) 2 cyl
REC24-42996	24-42996	70, 75, 80, 90 HP 3 cyl
		V6 (2.5L)
REC24-90392	24-90392	30-60 HP 2 / 3 cyl
		V6 (3.4L)

GRUESO
GROMMET
SPESSORE

Ref.	R.O.
REC25-64872	25-64872

MOTORES / ENGINES / MOTORI
30-125 HP (2, 3, 4 cyl)

VÁLVULA
POPPET
VALVOLA

Ref.	R.O.
REC86596T	86596T

MOTORES / ENGINES / MOTORI
40-90 HP (2, 3 cyl)
135-225 HP V6

Ref.	R.O.
REC8612882-1	8612882-1

MOTORES / ENGINES / MOTORI
30, 40 HP (2 cyl)
50, 55, 60 HP (3 cyl)

Ref.	R.O.
REC14480	14480

MOTORES / ENGINES / MOTORI
V6 (2.5L)

RETÉN
SEAL
TENUTA

Ref.	R.O.
REC25-854639	25-854639

MOTORES / ENGINES / MOTORI
30-60 HP (3 cyl) V6 (3.0L)

DIAFRAGMA
DIAPHRAGM
MEMBRANA

Ref.	R.O.
REC648771	64877-1

MOTORES / ENGINES / MOTORI
3, L4-Cyl & V6 (3.0L)

Ref.	R.O.
REC14479-1	14479-1

MOTORES / ENGINES / MOTORI
V6 (2.5L)

Ref.	R.O.
REC812887002	812887-1

MOTORES / ENGINES / MOTORI
30, 40 HP (2 cyl)
50-90 HP (3 cyl)

TAPA
CUP
COPERCHIO

Ref.	R.O.
REC12-94182	12-94182

MOTORES / ENGINES / MOTORI
30-125 HP (2, 3, 4 cyl)

DEFLECTOR
DEFLECTOR
DEFLECTORE

Ref.	R.O.
REC16496	16496

MOTORES / ENGINES / MOTORI
V6 (2.5L)

DESPLAZABLE
CARRIER
DISTANZIALE TERMOSTATO

Ref.	R.O.
REC65848	65848

MOTORES / ENGINES / MOTORI
30-125 HP (2, 3, 4 cyl)

Ref.	R.O.
REC827365	827365

MOTORES / ENGINES / MOTORI
30 Jet, 40, 45, 50, 55,60 HP (3 cyl)

RACOR PLÁSTICO PARA MANGUERA DE Ø INTERIOR 3/8”
ELBOW FITTING PLASTIC FOR 3/8” INSIDE Ø HOSE
RACCORDO DI PLASTICA PER TUBI DI Ø INTERNO DA 3/8”

Ref.	R.O.
REC331886	22-9964-1

ARANDELA
WASHER
RONDELLA

Ref.	R.O.
REC12-85303	12-85303

MOTORES / ENGINES / MOTORI
L6-cyl
V6 (2.5L)

Ref.	R.O.
REC12-76451	12-76451

MOTORES / ENGINES / MOTORI
V6 (2.5L)
V6 (3.0L)
Plástico / Plastic / Plastica

TORNILLO PARA TODAS LAS VÁLVULAS
SCREW FOR ALL POPPET
VITE PER TUTTE LE VALVOLE

Ref.	R.O.
REC10-69570	10-69570

COLAS GEARCASE PIEDI

COLAS COMPLETAS COMPLETE GEARCASE ASSEMBLY PIEDI COMPLETI

Ref.	R.O.	Cola completa Complete gearcase Piedi completi	Reducción Gear ratio Riduzione
REC1647-9148T84	1647-9148T84	20”	1.87:1
REC1647-9148T85	1647-9148T85	25”	1.87:1
REC1647-9148T81	1647-9148T81	20”	2:1
REC1647-9148T82	1647-9148T82	25”	2:1

MOTORES / ENGINES / MOTORI

2.0 / 2.4 / 2.5 L V6
V115 - V-200 (DFI)
XR-6
110, 140 JET (2.5L)

Ref.	R.O.	Cola completa Complete gearcase Piedi completi	Reducción Gear ratio Riduzione	Estrías eje Splines shaft Scalanature
REC1623-859399T13	1623-859399T13	20”	1.75:1	
REC1623-859399T14	1623-859399T14	25”	1.75:1	
REC1623-822442A19	1623-822442A19	20”	1.64:1	8
REC1623-822442A20	1623-822442A20	25”	1.64:1	8

MOTORES / ENGINES / MOTORI

3.0L
200 - 250 HP
3.0 (EFI, DFI)

Ref.	R.O.	Cola completa Complete gearcase Piedi completi	Reducción Gear ratio Riduzione
REC1667-9011R6	1667-901167, 78		2.07:1
	1667-901110, 11		
	1667-9011G51		
	1667-9011J6		
	1667-9011R6		

MOTORES / ENGINES / MOTORI

100 - 125 HP (4 cyl)
80 Jet

Selector 6 dientes
6 Jaw Tooth
Selettore 6 denti

Ref.	R.O.	Cola completa Complete gearcase Piedi completi	Ø Torpedo	Reducción Gear ratio Riduzione
REC1667-9011G90	1667-9011G90	20”	4.25”/107.95 mm	2.33:1
	1667-9011G70			

MOTORES / ENGINES / MOTORI

40 HP (4 cyl) OP094500 - OP206999
40 EFI (4 cyl) OP153500 - OP515896
50 HP (4 cyl) OP094500 - OP206999
50 EFI (4 cyl) OP153500 - OP515896
60 HP (4 cyl) OP094500 - OP206999
60 EFI (4 cyl) OP153500 - OP515896
BigFoot
(4 Tiempos / 4 Strokes / 4 Tempi)

Ref.	R.O.	Cola completa Complete gearcase Piedi completi	Ø Torpedo	Reducción Gear ratio Riduzione
REC1667-9011J41	1667-9011J41	25”	4.25”/107.95 mm	2.33:1

MOTORES / ENGINES / MOTORI

40 EFI (4 cyl) OP216185+
50 EFI (4 cyl) OP216185+
60 EFI (4 cyl) OP216185+
BigFoot
(4 Tiempos / 4 Strokes / 4 Tempi)

HERRAMIENTAS
TOOLS
ATTREZZI

EXTRACTOR COJINETES Y HÉLICES
PROP AND BEARING PULLER
ESTRATTORE CUSCINETTI E ELICHE

Ref.
REC90095

RECmar®

Extractor de cojinetes y hélices, con patas. Para todos los cojinetes Mercruiser y la mayoría de las hélices.
Prop and bearing carrier puller. Capacity: 5 Tons (Min). For Mercruiser All Style Bearing Carrier and Most Props.
Estrattore cuscinetti e eliche. Per tutti i cuscinetti Mercruiser e la maggior parte delle eliche.

Para hélices y cojinetes antiguos
For prop and old style bearing carrier.
Per eliche e cuscinetti vecchi.

Para cojinetes modernos
For new style bearing carrier.
Per cuscinetti moderni.

EXTRACTOR COJINETES
DRIVER BEARING
ESTRATTORE CUSCINETTI

Ref.	R.O.
REC91-34569A1	91-34569A1

NEW

Ref.	R.O.
REC91-36569T	91-36569T

Para desmontar el cojinete de las colas MC-I, R-MR, Alpha One.
Removes pinion bearing from MC-I, R-MR, and Alpha One drive units.
Per rimuovere il cuscinetto dal piede MC-I, R-MR, Alpha One.

EXTRACTOR
PULLER ROD
ESTRATTORE

Ref.	R.O.
REC91-31229	91-31229

RECmar®

Para utilizar con las herramientas REC91-43579 y REC91-36569T para instalar y desmontar el cojinete
Used with REC91-43579 & REC91-36569T tools to install & remove pinion bearing.
Da utilizzare con gli strumenti REC91-43579 e REC91-36569T per installare e smontare il cuscinetto.

EXTRACTOR PIÑONES Y COJINETES
UNIVERSAL PULLER PLATE
ESTRATTORE PIGNONE E CUSCINETTI

Ref.	Capacidad / Capacity / Capacità
REC91-00001	30-50 mm / 1 1/4" ~ 2 1/4"
REC91-00002	50-75 mm / 2 1/4" ~ 3 1/2"
REC91-37241	75-105 mm / 3" ~ 4 1/2"

RECmar®

KIT HERRAMIENTAS COLAS
GEAR CASE TOOL KIT
KIT ATTREZZI PIEDI

Ref.	R.O. / OEM
RM91-31229A7	91-31229A7

Kit de montaje y desmontaje de los retenes y cojinetes de las colas Alpha, Alpha Gene II y Bravo.
Removes and installs bearings in MC-I, R-MR, Alpha One, Alpha One Gen Two and Bravo.
Kit di montaggio e smontaggio delle guarnizioni di tenuta e dei cuscinetti del piede.

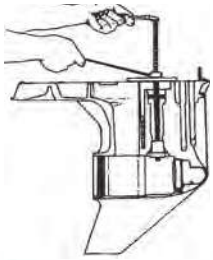

KIT LLAVE HÉLICE
PROP WRENCH KIT
KIT CHIAVE ELICHA

Ref.	RO / OEM	TUERCA / NUT / DADO
REC91-859046Q4	SIERRA 18-4446	1 1/16"
	MERCURY 91-821887T1	
	MCM 91-859046Q4	
	HONDA 89-89206-ZW7-000AH	

Mercury Mariner 75 - 300 HP
Force V4, V6
Mercruiser Alpha / Bravo
Honda BF75-BF130
Suzuki DF60 - DF225 HP

Nissan / Tohatsu 70-140 HP
Yamaha Sterndrives
Yamaha 50-250 HP
OMC Cobra / Volvo SX
Jonhson Evinrude V4 / V6 / V8

RECmar®

LLAVE CABLE CAMBIO
SHIFT CABLE TOOL
CHIAVE PER CAVO CAMBIO

Ref.	R.O. / OEM
REC91-12037	91-12037

Para montaje y desmontaje de los cables de cambio en las colas MC-I,R-MR, Alpha One, Gene II.
Installs and removes drive shaft bearing retainer on MC-1, R-MR, Blackhawk, all Bravo, and all Alpha drive units.
Per il montaggio e lo smontaggio dei cavi di innesto nel piede MC-I, R-MR, Alpha One, Gen II.

LLAVE TUERCA VARILLA CAMBIO
SHIFT SHAFT BUSHING TOOL
CHIAVE DADO LEVA CAMBIO

Ref.	R.O. / OEM
REC91-31107T	91-31107T

Para montaje y desmontaje de las tuercas de la varilla cambio en las colas MC-I, R-MR, Alpha One.
Removes and installs the shift shaft bushing in the gear case of MC-I, R-MR, and Alpha One, drive units.
Per il montaggio e lo smontaggio dei dadi sull'asta cambiare nel piede MC-1, R-MR, Alpha One.

LLAVE TUERCA EJE VERTICAL
PINION NUT ADAPTOR KIT
CHIAVE DADO ASSE VERTICALE

Ref.	R.O. / OEM
REC91-43506T	91-43506T

Para montaje y desmontaje del retenedor y cojinete superior en colas.
Removes and installs threaded bearing retainer on stern drives.
Per il montaggio e lo smontaggio del fermo di ritegno e del cuscinetto superiore dei piedi.

Ref.	R.O. / OEM
REC91-61067A04	91-61067A04

Incluye un adaptador eje. Sostiene la tuerca del piñón cuando se está sacando el piñón y el eje en las colas MC-I, R-MR, Alpha One.
Holds pinion nut when removing pinion gear and drive shaft on MC-I, R-MR, and Alpha One drive units. Comes with drive shaft adaptor.
Include un adattatore albero. Tenendo il dado del pignone quando si rimuove la ruota dentata e l'albero nel piede.

LLAVE ESTRIADO EJE
PROP SHAFT ADAPTOR
CHIAVE ASSE STRIATO

Ref.	R.O. / OEM
REC91-56775T	91-56775T

Da una superficie de llave para girar el eje de la hélice en las colas MC-I, R-MR, TRS, Alpha One y Gene II.
Provides a wrench surface to turn the propeller shaft on MC-I; R-MR; Alpha One; Alpha One, Gen Two; and TRS drive units.
Fornisce una superficie di chiave per ruotare l'asse del propulsore nel piede MCI, R-MR, TRS, Alpha One e Gen II.

Ref.	R.O. / OEM
REC91-61077T	91-61077T

Da una superficie de llave para girar el eje de la hélice en las colas MC-I, R-MR, TRS, Alpha One y Gene II y Bravo I.
Provides a wrench surface to turn the propeller shaft on MC-I; R-MR; Alpha One; Alpha One, Gen Two; Bravo One; and TRS drive units.
Fornisce una superficie di chiave per ruotare l'asse del propulsore nel piede MCI, R-MR, TRS, Alpha One e Gen II, e Bravo I.

LLAVE TUERCA DIÁBOLO
BEARING CARRIER RETAINER WRENCH
CHIAVE PER CUSCINETTO

Ref.	R.O. / OEM
REC91-61069T	91-61069T

Instala y desinstala las tuercas del diábolo en las colas MC-I, R-MR, TRS, Alpha One y Gene II y Bravo I y II
Removes and installs bearing carrier retainer nuts on Bravo One and Two; MC-I; R-MR; and Alpha One, Gen. Two; and TRS; drive units.
Installa e Disinstalla i dadi di fissaggio dell'asse nel piede MC-I, R-MR, TRS, Alpha One, Gen II, Bravo I, III.

RECmar®

LLAVE GALGADO PIÑONES
PINION GEAR SHIMMING TOOL
CHIAVE PER PIGNONI

Ref.	R.O. / OEM
REC91-56048001	91-56048001
REC91-60523	91-60523
REC91-60526T	91-60526T

Mide la altura del piñón en las colas MC-I, R-MR, Alpha One y Gene II
Measures pinion height of MC-I; R-MR; Alpha One; and Alpha One, Gen Two drive units.
Misurare l'altezza del pignone nel piede MC-I, R-MR, Alpha One e Gen II.

REC91-56048001

REC91-60526T

REC91-60523

DESPIECE COLA
GEARCASE COMPONENTS
ESPLOSO PIEDE

4 TIEMPOS STROKES | 2 TIEMPOS STROKES

4 / 5 HP

NEW

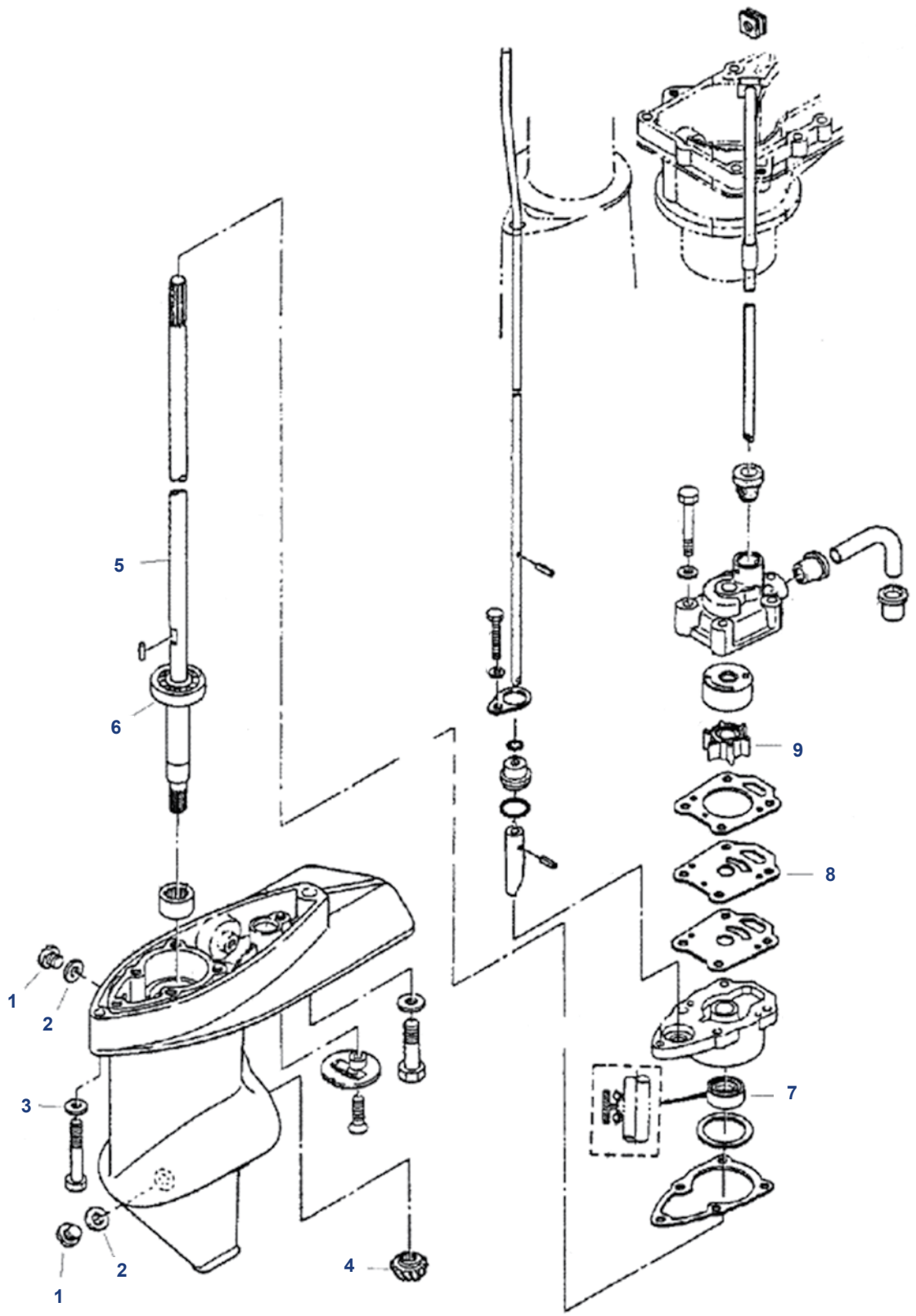

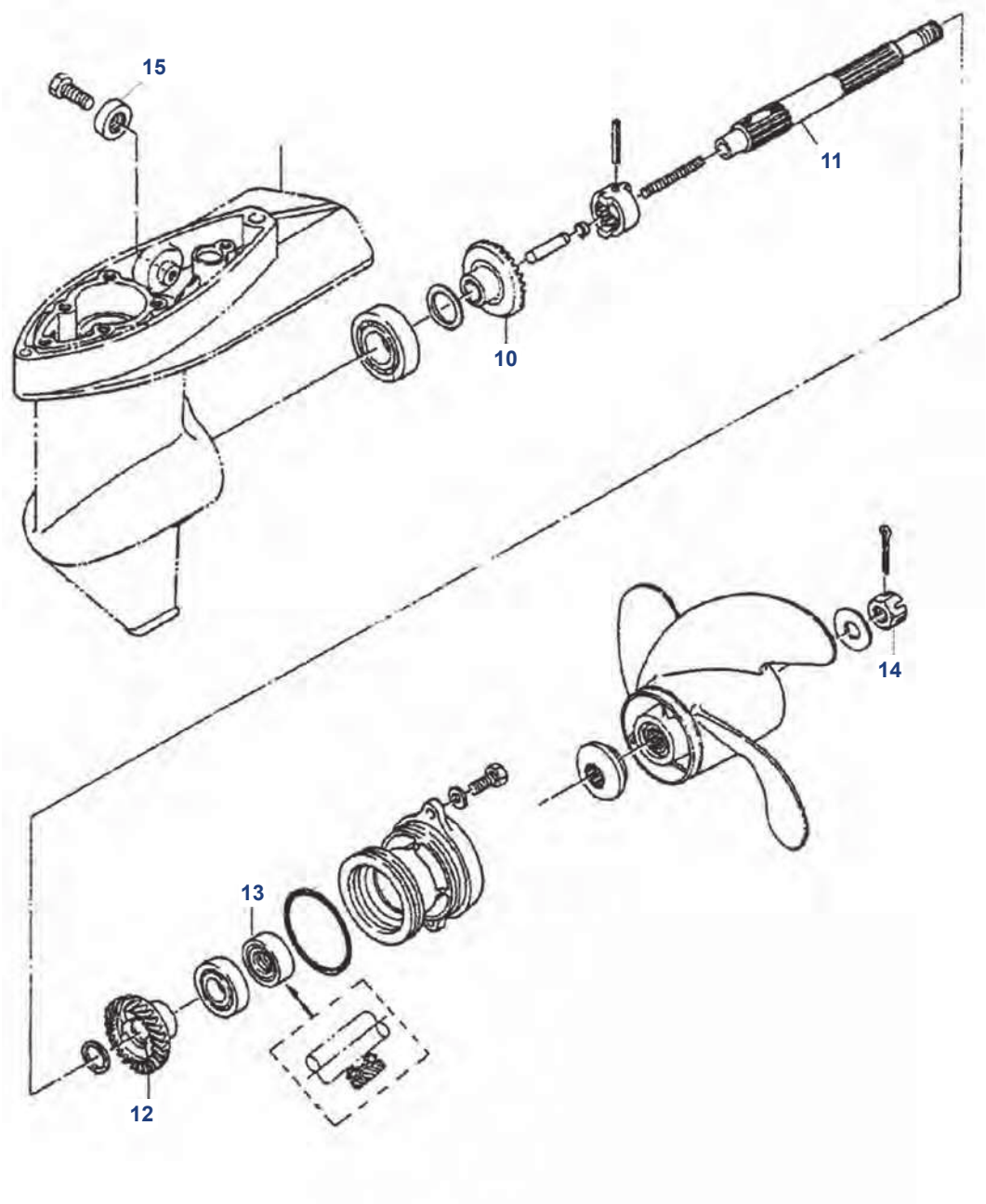

Nº	Ref.	R.O./OEM	Descripción	Description	Descrizione
1	**PAF4-03000023**	22-95368 3	TAPÓN	PLUG	TAPPO
2	**PAF4-03000024**	27-95220	JUNTA	GASKET	GUARNIZIONE
3	**PAGB/T97.1-6**	12-16826	ARANDELA	WASHER	RONDELLA
4	**REC43-16138**	43-16138	PIÑÓN	GEAR	INGRANAGGIO
5	**REC45-161351**	45-16135 1	EJE (S)	DRIVESHAFT (S)	ASSE (S)
5	**REC45-8M0076368**	45-16136 1	EJE (L)	DRIVESHAFT (L)	ASSE (L)
6	**REC30-95347**	30-95347	COJINETE	BEARING	CUSCINETTO
7	**REC26-16162**	26-16162	RETÉN ACEITE	OIL SEAL	PARAOLIO
8	**REC16159**	16159	PLACA	PLATE	PIASTRA
9	**REC47-161543**	47-16154 3	IMPULSOR	IMPELLER	GIRANTE
10	**REC43-812944**	812944	PIÑÓN	GEAR	INGRANAGGIO
11	**REC44-195133**	19513 3	EJE HÉLICE	PROPELLER SHAFT	ASSE GIRANTE
12	**REC43-8129451**	812945 1	PIÑÓN, INVERSO	GEAR, REVERSE	PIGNONE MARCIA INDIETRO
13	**REC26-16130**	16130	RETÉN ACEITE	OIL SEAL	PARAOLIO
14	**REC11-16147Q**	16147	TUERCA HÉLICE	PROP NUT	DADO CHIUSURA ELICA
15	**TEN00823**	823912	ÁNODO REDONDO	ANODE ROUND	ANODO TONDO
15	**CM3H6-60218-000**	875208	ÁNODO CUADRADO	ANODE SQUARE	ANODO

4 STROKES TIEMPOS

8, 9.9 (209 CC)

NEW

2 STROKES TIEMPOS

6, 8 (2 CYL) (INTER.)
8, 9.8 SEAPRO (2 CYL) (INTER.)

NEW

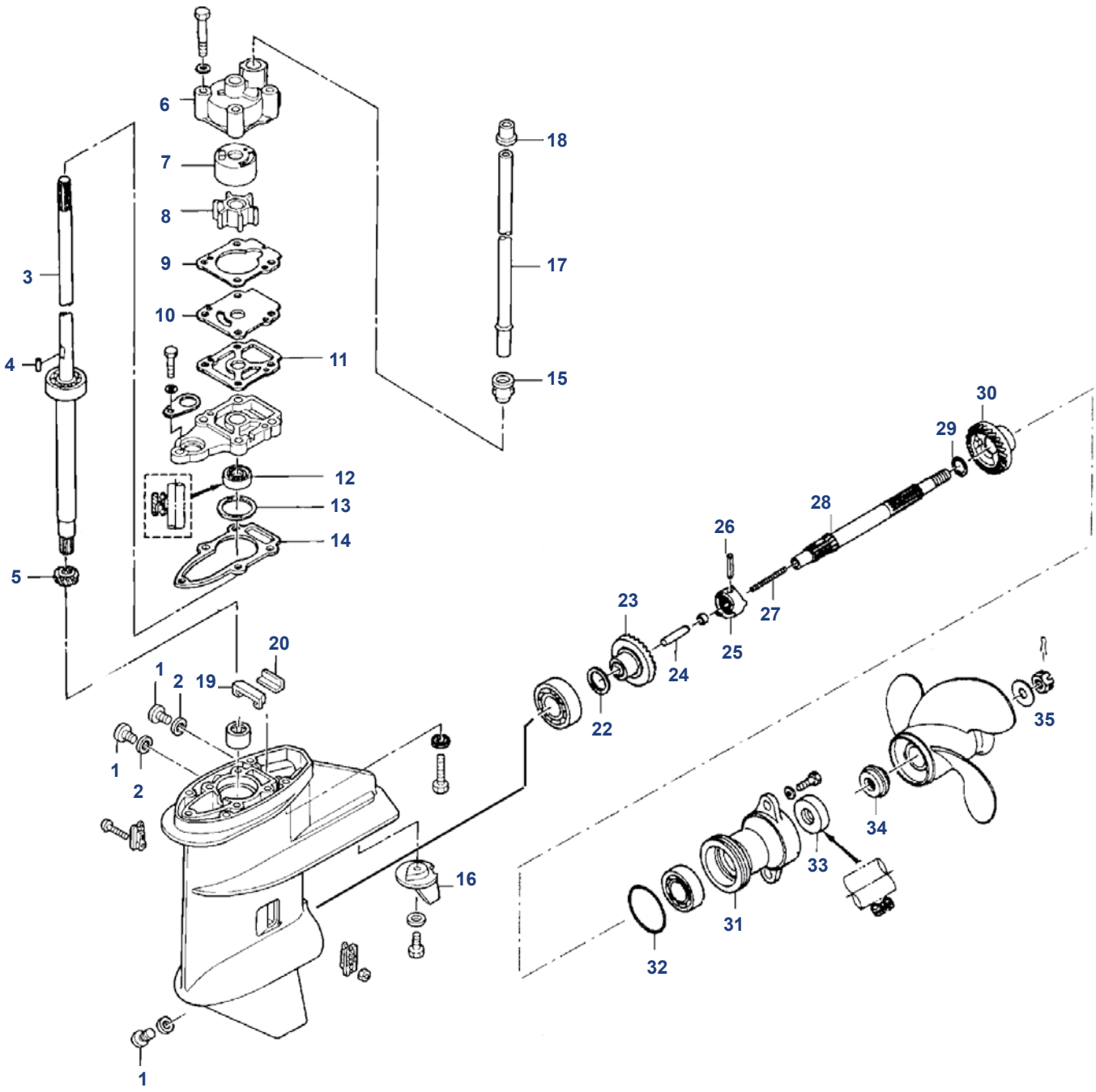

Ref.	R.O.
REC3B2-87321-0	27-8M0082883

21

Kit retenes cola
Gearcase seal kit
Kit tenuta piede

Nº	Ref.	R.O./OEM	Descripción	Description	Descrizione
1	**PAF4-03000023**	95368 3	TAPÓN	PLUG	TAPPO
2	**PAF4-03000024**	95220	JUNTA	GASKET	GUARNIZIONE
3	**PAF8-04020001S**	803738004	EJE COLA (S)	DRIVE SHAFT (S)	ASSE PIEDE (S)
3	**PAF8-04020001L**	803738005	EJE COLA (L)	DRIVE SHAFT (L)	ASSE PIEDE (L)
4	**PAF8-04000021**	95218 11	PIN, ACERO INOX.	PIN, ROLL STAINLESS STEEL	CHIAVETTA INOX
5	**PAF8-04000003**	803740 1	PIÑÓN	GEAR, PINION	INGRANAGGIO
6	**PAF8-04000009**	803750A02	CUERPO BOMBA	HOUSING ASSEMBLY	CORPO POMPA
7	**PAF8-04000010**	803751 1	TAPA BOMBA	LINER	COPERCHIO POMPA
8	**PAF8-04000200**	803748 1	IMPULSOR	IMPELLER	GIRANTE
9	**PAF8-04000008**	16158 5	JUNTA	GASKET	GUARNIZIONE
10	**PAF8-04000007**	803753 1	PLACA	GUIDE PLATE	PIASTRA
11	**PAF8-04000006**	16158 6	JUNTA	GASKET	GUARNIZIONE
12	**PAF8-04000101**	95348	RETÉN ACEITE	OIL SEAL	PARAOLIO
13	**PAF8-04000004-1**	853795 5	GRUESO	SHIM	SPESSORE
14	**PAF8-04000005**	16158 7	JUNTA	GASKET	GUARNIZIONE
15	**PAF8-04000013**	804903	RETÉN AGUA	GROMMET	GOMMINO TENUTA ACQUA
16	**CM3V1-60217-0**	853762T01	ÁNODO	ANODO	ANODO
17	**PAF8-02000006S**	803755004	TUBO AGUA (S)	WATER TUBE (S)	TUBO ACQUA (S)
17	**PAF8-02000006L**	803755005	TUBO AGUA (L)	WATER TUBE (L)	TUBO ACQUA (L)
18	**PAF8-02000007**	804899002	RETÉN	GROMMET	GOMMINO TENUTA ACQUA
19	**PAF8-04000016**	895155	RETÉN	SEAL WATER	GUARNIZ. TENUTA ACQUA
20	**PAF8-04000015**	895156	PLACA, RETÉN AGUA	PLATE, SEAL WATER	PIASTRA, TENUTA ACQUA
21	**REC3B2-87321-0**	804908A00	KIT JUNTAS	GASKET SET	KIT GAURNIZIONE
22	**PAF8-04000012-1**	16141	GRUESO 0,1	SHIM 0,1	SPESSORE 0,1
22	**PAF8-04000012-2**	813277	GRUESO 0,15	SHIM 0,15	SPESSORE 0,15
23	**PAF8-04010000**	803739 1	PIÑÓN ADELANTE	GEAR, FORWARD	MARCIA AVANTI
24	**PAF8-04000305**	16152	PASADOR	FOLLOWER CAM	CHIAVETTA
25	**PAF8-04000303**	803745 1	SELECTOR	CLUTCH	SELETTORE
26	**PAF8-04010000**	16150	PIN, SELECTOR	CLUTCH PIN	SPINOTTO SELETTORE
27	**PAF8-04000302**	892777002	MUELLE 58 mm	SPRING 58 mm	MOLLA 58 mm
28	**PAF8-04000301**	803744002	EJE HÉLICE	PROPELLER SHAFT	ASSE ELICA
29	**PAF8-04000012**	16140	ARANDELA	WASHER	RONDELLA
30	**PAF8-04000014**	803741 1	PIÑÓN ATRÁS	GEAR, REVERSE	MARCIA INDIETRO
31	**PAF8-04040001**	8037632T03	COJINETE DIÁBOLO	CARRIER BEARING	CUSCINETTO
32	**PAF8-04040002**	16131	ARO	O-RING	O-RING
33	**PAF8-04040004**	16130	RETÉN ACEITE	SEAL, OIL	PARAOLIO
34	**PAF8-04000019**	803743002	CIERRE HÉLICE	THRUST HOLDER	CHIUSURA ELICA
35	**PAF15-06000016**	16147	TUERCA HÉLICE	PROP NUT	DADO ELICA

4 STROKES TIEMPOS

8 HP BODENSEE (INTER.)
9.9 HP (232 CC)
13.5 HP (INTER.)
15 HP

NEW

2 STROKES TIEMPOS

6, 8, 9.9, 10, 13.5, 15 HP
(1986-05)

NEW

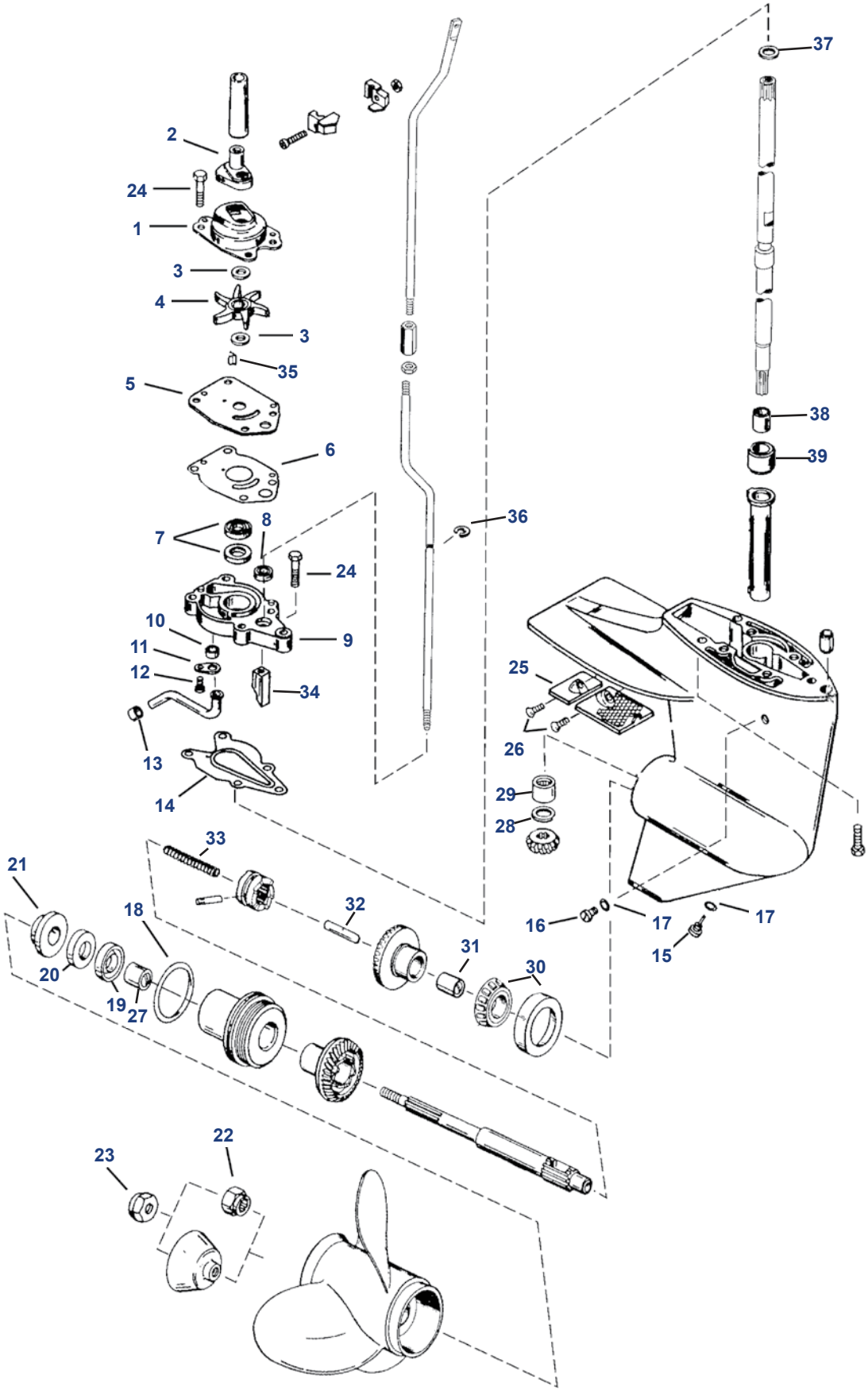

Nº	Ref.	R.O./ OEM	Descripción	Description	Descrizione
1	**REC46-42089A2**	46-42089A2	CUERPO BOMBA	PUMP HOUSING	CORPO POMPA
2	**REC26-421021**	26-42102-1	GRUESO	GROMMET	SPESSORE
3	**REC12-16448**	12-16448	ARANDELA	WASHER	RONDELLA
4	**REC47-420382**	47-42038-2	IMPULSOR	IMPELLER	GIRANTE
5	**REC42200**	42200	TAPA BOMBA	WEAR PLATE	COPERCHIO POMPA
6	**REC27-19202001**	27-19202	JUNTA	GASKET	GUARNIZIONE
7	**REC26-413651**	26-41365-1	RETÉN ACEITE	OIL SEAL	PARAOLIO
8	**REC25-822236**	25-822236	ARO	QUAD RING	O-RING
9	**REC46-42040T5**	46-42040T5	BASE BOMBA	PUMP BASE ASSEMBLY	BASE POMPA
10	**REC26-42133**	26-42133	RETÉN	SEAL	TENUTA
11	**REC42375**	42375	RETENEDOR	RETAINER	RITENITORE
12	**REC10-48408**	10-48408	TORNILLO	SCREW	VITE
13	**REC26-33613**	26-33613	RETÉN	SEAL	GOMMINO TENUTA
14	**REC27-192043**	27-19204-3	JUNTA	GASKET	GUARNIZIONE
15	**REC22-67892A05**	22-67892A1	TORNILLO DRENAJE	DRAINING SCREW	VITI DRENAGGIO
16	**REC10-79953Q04**	10-79953Q2	TORNILLOS	SCREW	VITI
17	**REC12-191833**	12-19183-3	JUNTA	GASKET	GUARNIZIONE
18	**REC25-33145**	25-33145	ARO TÓRICO	O-RING	O-RING
19	**REC26-66022**	26-66022	RETÉN ACEITE DESIGN I	OIL SEAL (DESIGN I)	PARAOLIO (DESIGN I)
19	**REC26-99325**	26-99325	RETÉN ACEITE DESIGN II	OIL SEAL (DESIGN II)	PARAOLIO (DESIGN II)
20	**REC26-821928**	26-821928	RETÉN ACEITE DESIGN III	OIL SEAL (DESIGN III)	PARAOLIO (DESIGN III)
21	**REC8219321**	821932-1	CIERRE HÉLICE	THRUST HUB	CHIUSURA ELICA
22	**REC23-420911**	23-42091-1	ESPACIADOR	SPACER	DISTANZIALE
23	**REC11-40140**	11-40140	TUERCA HÉLICE	PROP NUT	DADO ELICA
24	**REC10-82684430**	10-826844-30	TORNILLO	SCREW	VITE
25	**CM42121A2**	42121A2	ANODO ALUMINIO	ANODE ALUMINUM	ANODO ALLUMINIO
25	**CM42121**	42121A2	ANODO ZINC	ANODE ZINC	ANODO ZINCO
26		10-13954	TORNILLO	SCREW	VITE
27	**REC23-821927**	23-821927	CASQUILLO	BUSHING	BOCCOLA
28	**REC12-41369**	12-41369	ARANDELA	WASHER	RONDELLA
29	**REC31-22756**	31-22756	RODAMIENTO	BEARING	CUSCINETTO
30	**REC31-821321A1**	31-821321A1	RODAMIENTO	BEARING	CUSCINETTO
31	**REC23-41367**	23-41367	CASQUILLO	BUSHING	BOCCOLA
32	**REC813139**	813139	LEVA SELECTOR	CAM FOLLOWER	CHIAVETTA SELETTORE
33	**REC24-42204**	24-42204	MUELLE	SPRING	MOLLA
34	**REC42039**	42039	LEVA CAMBIO	SHIFT CAM	ASSE CAMBIO
35	**REC28-42376A2**	28-42376A2	CHAVETA	KEY	CHIAVETTA
36	**REC52-42389**	52-42389	CLIP	CLIP	CLIP
37	**REC12-822248**	12-822248	ARANDELA	WASHER	RONDELLA
38	**REC23-823943**	23-823943	CASQUILLO	BUSHING	BOCCOLA
39	**REC23-823944**	23-823944	CASQUILLO	SLEEVE	BOCCOLA

Ref.	R.O.
REC26-41365A3	26-41365A3

Kit retenes cola
Gearcase seal kit
Kit tenuta piede

Ref.	R.O.
REC47-42038Q3	47-42038Q3

Kit reparación Bomba agua
Water Pump kit
Kit riparazione Pompa acqua

Ref.	R.O.
REC46-42089A5	46-42089A5

Kit reparación Bomba agua
Water Pump kit
Kit riparazione Pompa acqua

4 TIEMPOS STROKES — 8 HP BODENSEE (INTER.) 9.9 HP (232 CC) 13.5 HP (INTER.) 15 HP NEW

2 TIEMPOS STROKES — 18XD, 20, 25 HP (1984-05) NEW

Ref.	R.O.
REC46-99157T2	46-99157T2

Kit reparación Bomba agua
Water Pump kit
Kit riparazione Pompa acqua

Ref.	R.O.
REC47-85089Q4	47-85089Q4

Kit reparación Bomba agua
Water Pump kit
Kit riparazione Pompa acqua

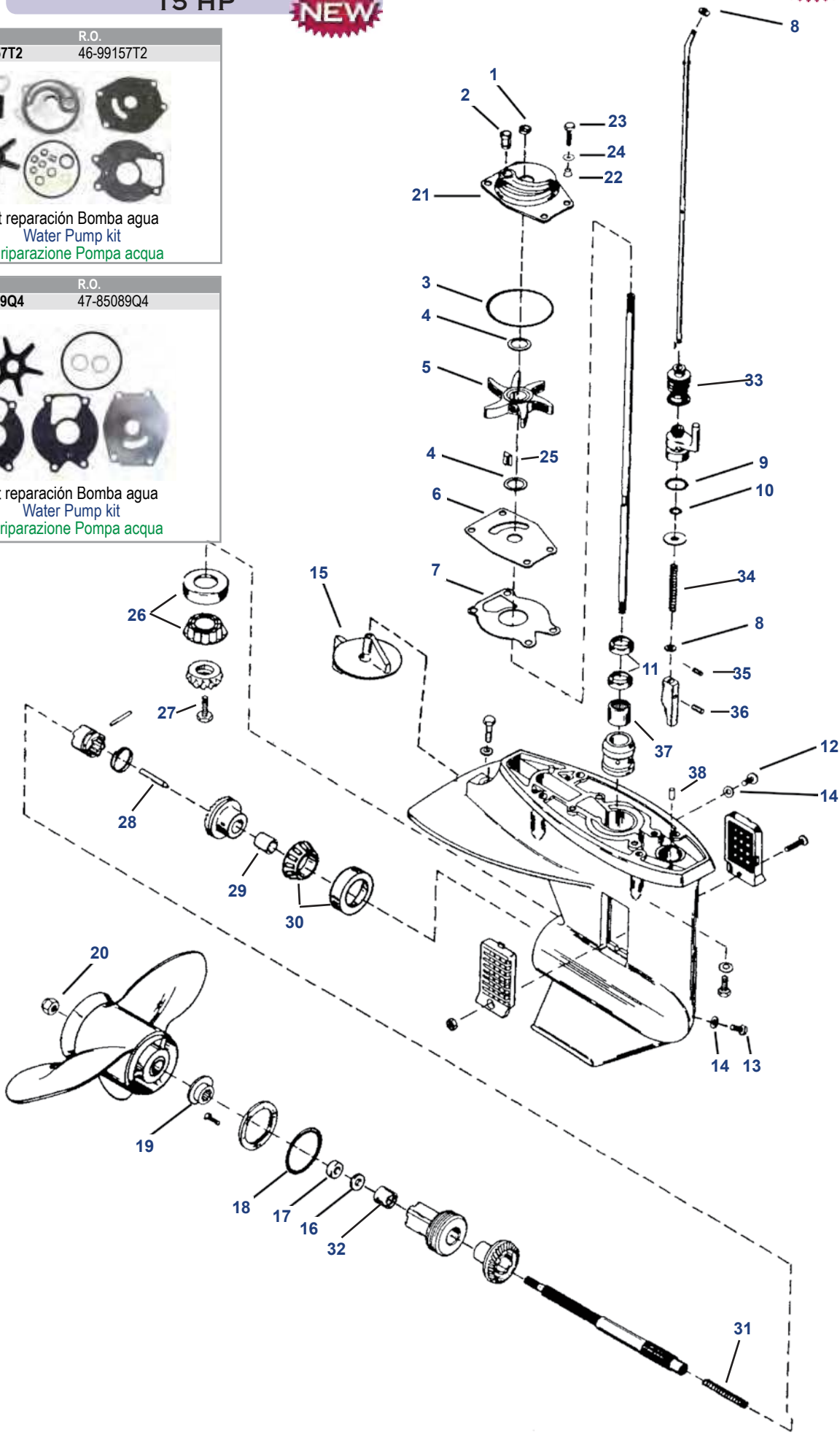

Nº	Ref.	R.O./ OEM	Descripción	Description	Descrizione
1	**REC25-86203**	25-86203	RETÉN	SLINGER	TENUTA
2	**REC26-85090001**	26-85090	GRUESO	GROMMET	SPESSORE
3	**REC25-67202**	25-69202	ARO TÓRICO	O-RING	O-RING
4	**REC12-86645**	12-86645-1	ARANDELA	WASHER	RONDELLA
5	**REC47-8508910**	47-85089-10	IMPULSOR	IMPELLER	GIRANTE
6	**REC85083**	85083	TAPA BOMBA	WEAR PLATE	COPERCHIO POMPA
7	**REC27-993261**	27-99326-1	JUNTA	GASKET	GUARNIZIONE
8	**REC12-29245**	12-29245	ARANDELA	WASHER	RONDELLA
9	**REC310584**	25-35276	ARO TÓRICO	O-RING	O-RING
10	**REC301877**	25-85594	ARO TÓRICO	O-RING	O-RING
11	**REC301877**	26-99325	RETÉN	OIL SEAL	PARAOLIO
12	**REC10-79953Q04**	10-79953Q2	TORNILLO	SCREW	VITE
13	**REC22-67892A05**	22-67892A1	TORNILLO DRENAJE	DRAINING SCREW	VITE DRENAGGIO
14	**REC12-191833**	12-19183-3	JUNTA	GASKET	GUARNIZIONE
15	**TEN00812**	98432T6	ANODO ZINC	TRIM TAB ZINC	ANODO ZINCO
15	**CM984325A**	98432T6	ANODO ALUMINIO	TRIM TAB ALUMINUM	ANODO ALLUMINIO
16	**REC26-41132**	26-41132	RETÉN ACEITE	OIL SEAL	PARAOLIO
17	**REC26-76127**	26-41131	RETÉN ACEITE	OIL SEAL	PARAOLIO
18	**REC25-85549**	25-85549	ARO TÓRICO	O-RING	O-RING
19	**REC858498**	858498	CIERRE HÉLICE	THRUST HUB	CHIUSURA ELICA
20	**REC11-88228**	11-88228	TUERCA HÉLICE (PLÁSTICO)	PROP NUT (PLASTIC)	DADO ELICA (PLASTICA)
20	**REC11-4011912**	11-40119-12	TUERCA HÉLICE	PROP NUT (SEA PRO, MARATHON, 15, 25, SUPER 15)	DADO ELICA
21	**REC46-99157A02**	46-99157A02	CUERPO BOMBA	PUMP HOUSING	CORPO POMPA
22	**REC23-85095**	23-85095	CIERRE	INSULATOR	CHIUSURA
23		10-824832-4	TORNILLO	SCREW	VITE
24	**REC12-29245**	12-89302	ARANDELA	WASHER	RONDELLA
25	**REC28-8M0032838**	28-8M0032838	CHAVETA	KEY	CHIAVETTA
26	**REC31-98294A1**	31-98294A1	RODAMIENTO	BEARING	CUSCINETTO
27	**REC10-49908**	10-49908	TORNILLO	SCREW	VITE
28	**REC85094**	85094	LEVA	CAM FOLLOWER	CHIAVETTA
29	**REC23-85557**	23-85557	CASQUILLO	BUSHING	BOCCOLA
30	**REC31-66668A1**	31-99328A1	RODAMIENTO	BEARING	CUSCINETTO
31	**REC24-88680**	24-88680	MUELLE	SPRING	MOLLA
32	**REC31-21739**	31-21739	RODAMIENTO AGUJAS	BEARING, NEEDLE	CUSCINETTO
33	**REC85552001**	85552001	LEVA FUELLE	SHIFT BOOT	CUFFIA DEL CAMBIO
34	**REC24-93007**	24-93007	MUELLE	SPRING	MOLLA
35	**REC17-85593**	17-85593	PASADOR	ROLL PIN	SPINOTTO
36	**REC17-85096**	17-85096	PASADOR	DRIVE PIN	SPINOTTO
37	**REC31-41326**	31-41326	RODAMIENTO	BEARING, UPPER DRIVE SHAFT	CUSCINETTO
38	**REC17-85500**	17-85500	PIN	ALIGNMENT PIN	SPINOTTO

Ref.	R.O.
REC26-85090A2	26-85090A2

Kit retenes cola (1984+)
Gearcase seal kit (1984+)
Kit tenuta piede (1984+)

Ref.	R.O.
REC26-85090A1	26-85090A1

Kit retenes cola (-1993)
Gearcase seal kit (-1993)
Kit tenuta piede (-1993)

4 STROKES TIEMPOS

25 HP
30, 40 HP (CARB 3 CYL) (EFI)
40 ITALY
45 BODENSEE
50 HP

2 STROKES TIEMPOS

25 - 50 HP (1997-06)

Ref.	R.O.
REC823547A2	823547A2

Kit retenes cola
Gearcase seal kit
Kit tenuta piede

Ref.	R.O.
REC821354A2	821354A2

Kit reparación Bomba agua
Water Pump kit
Kit riparazione Pompa acqua

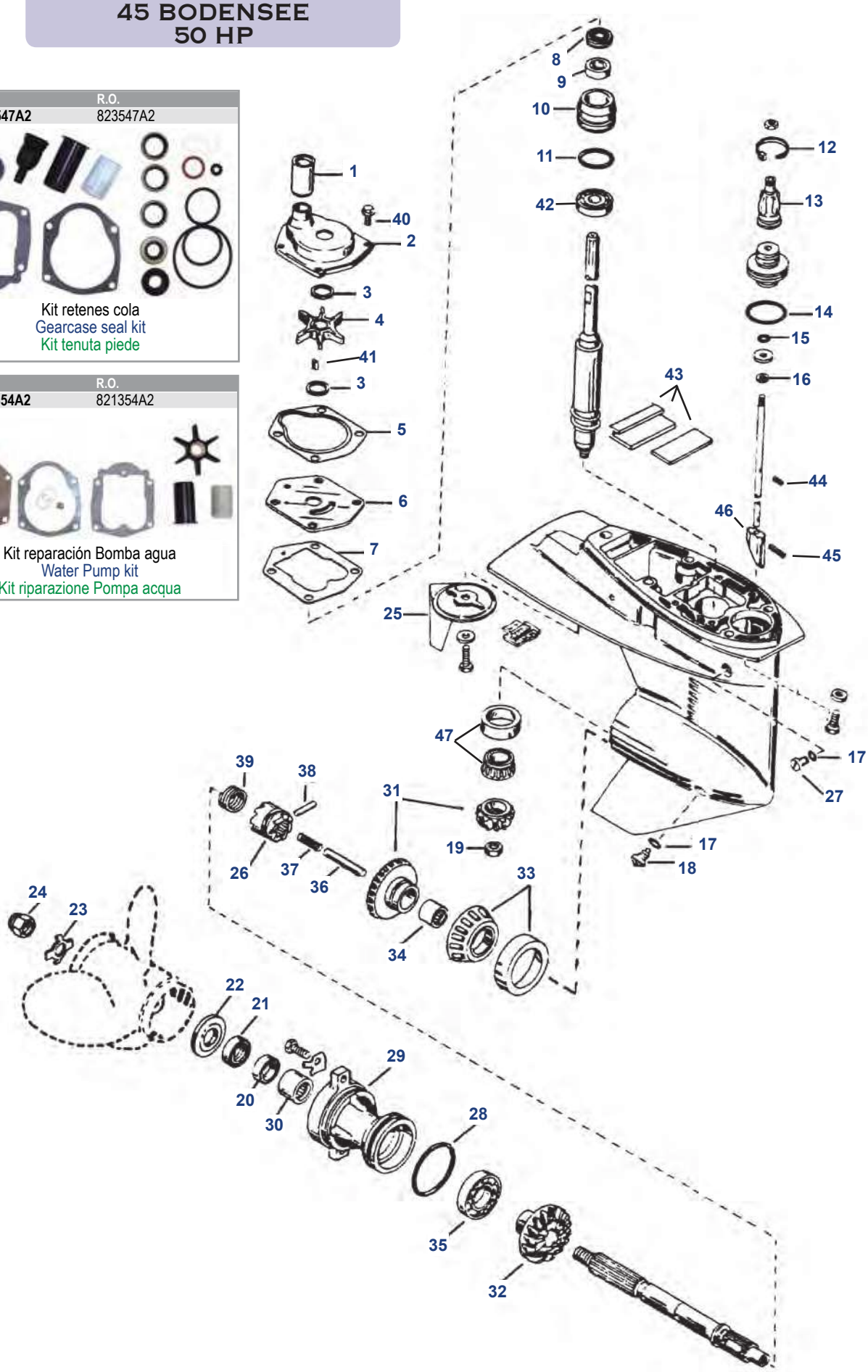

Nº	Ref.	R.O./ OEM	Descripción	Description	Descrizione
1	**REC8235471**	823547-1	RETÉN TUBO AGUA	WATER TUBE SEAL	TENUTA TUBO ACQUA
2		46-821351A3	CUERPO BOMBA	PUMP HOUSING	CORPO POMPA
3	**REC12-86645**	12-86645-1	ARANDELA	WASHER	RONDELLA
4	**REC47-8508910**	47-85089-3	IMPULSOR	IMPELLER	GIRANTE
5	**REC27-822189**	27-822189	JUNTA	GASKET	GUARNIZIONE
6	**REC8213542**	821354-2	TAPA BOMBA	WEAR PLATE	COPERCHIO POMPA
7	**REC27-822217**	27-822217	JUNTA	GASKET	GUARNIZIONE
8	**REC26-821309**	26-821309	RETÉN ACEITE	OIL SEAL	PARAOLIO
9	**REC26-821310**	26-821310	RETÉN ACEITE	OIL SEAL	PARAOLIO
10	**REC46-821307A2**	46-821307A2	BASE BOMBA	PUMP BASE	BASE POMPA
11	**REC25-821308**	25-821308	ARO TÓRICO	O-RING	O-RING
12	**REC54-8M0064024**	823548	ABRAZADERA	CABLE TIE	FASCETTA
13	**REC822158**	822158	LEVA	BOOT	BOOT
14	**REC3852928**	25-26855	ARO TÓRICO	O-RING	O-RING
15	**REC301877**	25-85594	ARO TÓRICO	O-RING	O-RING
16	**REC12-29245**	12-29245	ARANDELA	WASHER	RONDELLA
17	**REC12-191833**	12-19183-3	JUNTA	GASKET	GUARNIZIONE
18	**REC22-67892A05**	22-67892A1	TORNILLO DRENAJE	DRAINING SCREW	VITE DRENAGGIO
19	**REC313339**	11-55910	TUERCA PIÑÓN	PINION NUT	DADO PIGNONE
20	**REC26-69188**	26-69188	RETÉN ACEITE	OIL SEAL	PARAOLIO
21	**REC26-69189**	26-69189	RETÉN ACEITE	OIL SEAL	PARAOLIO
22	**REC73345A1**	73345A1	CIERRE HÉLICE	THRUST HUB	CHIUSURA ELICA
23	**REC14-76281Q**	14-76281	ARANDELA	TAB WASHER	RONDELLA
24	**REC11-69578Q1**	11-69578A1	TUERCA HÉLICE	PROP NUT	DADO ELICA
25	**CM822157T2**	822157T2	ÁNODO ZINC	ANODE ZINC	ANODO ZINCO
25	**TEN00829AL**	822157T2	ÁNODO ALUMINIO	ANODE ALUMINUM	ANODO ALLUMINIO
26		52-812314T	SELECTOR	CLUTCH DOG	SELETTORE
27	**REC10-79953Q04**	10-79953Q2	TAPÓN	SCREW SET	TAPPO
28	**REC25-80863**	25-815460	ARO TÓRICO	O-RING	O-RING
29	**REC19291A3**	19291A3	COJINETE DIABOLO	BEARING CARRIER	CUSCINETTO
30	**REC31-21700**	31-21700	COJINETE	BEARING	CUSCINETTO
31	**REC43-803498T1**	43-803498T1	KIT PIÑONES MARCHA AVANTE	P/FORWARD GEAR SET	KIT PIGNONE MARCIA AVANTI
32	**REC43-822163T1**	43-822163T1	PIÑÓN MARCHA ATRÁS	REVERSE GEAR	PIGNONE MARCIA INDIETRO
33	**REC31-66668A1**	31-99328A1	COJINETE	BEARING	CUSCINETTO
34	**REC31-41326**	31-41326	COJINETE	BEARING	CUSCINETTO
35	**REC30-20839T**	30-20839T	COJINETE	BEARING	CUSCINETTO
36		821578	PASADOR	CAM FOLLOWER	CHIAVETTA
37		24-826199-1	MUELLE	SPRING	MOLLA
38		17-85093	PASADOR	CROSS PIN	CHIAVETTA
39	**REC24-38114**	24-38114	MUELLE	SPRING	MOLLA
40		10-824832-4	TORNILLO	SCREW	VITE
41	**REC28-8M0032838**	28-8M0032838	CHAVETA	KEY	CHIAVETTA
42		30-821311	RODAMIENTO	BEARING	CUSCINETTO
43		818226A1	KIT RETÉN ESCAPE	SEAL EXHAUST KIT	KIT TENUTA SCARICO
44	**REC17-85593**	17-85593	PIN	PIN	SPINOTTO
45	**REC17-822369**	17-822369	PIN	PIN	SPINOTTO
46	**REC8213161**	8213161	LEVA CAMBIO	SHIFT CAM	ALBERO CAMBIO
47	**REC31-821321A1**	31-821321A1	RODAMIENTO	BEARING	CUSCINETTO

4 TIEMPOS STROKES — 40, 50, 60 HP (4 CYL) (EFI) 40 CARB (3 CYL) (3.44" / 87.38 MM) Ø TORPEDO

2 TIEMPOS STROKES — 50, 55, 60 HP (3 CYL) (3.44" / 87.38 MM) Ø TORPEDO

Ref.	R.O.
REC26-814669A2	26-814669A2

Kit retenes cola
Gearcase seal kit
Kit tenuta piede

Ref.	R.O.
REC46-812966A12	46-812966A12

Kit reparación Bomba agua
Water Pump kit
Kit riparazione Pompa acqua

Ref.	R.O.
REC46-812966A11	46-812966A11

Kit reparación Bomba agua
Water Pump kit
Kit riparazione Pompa acqua

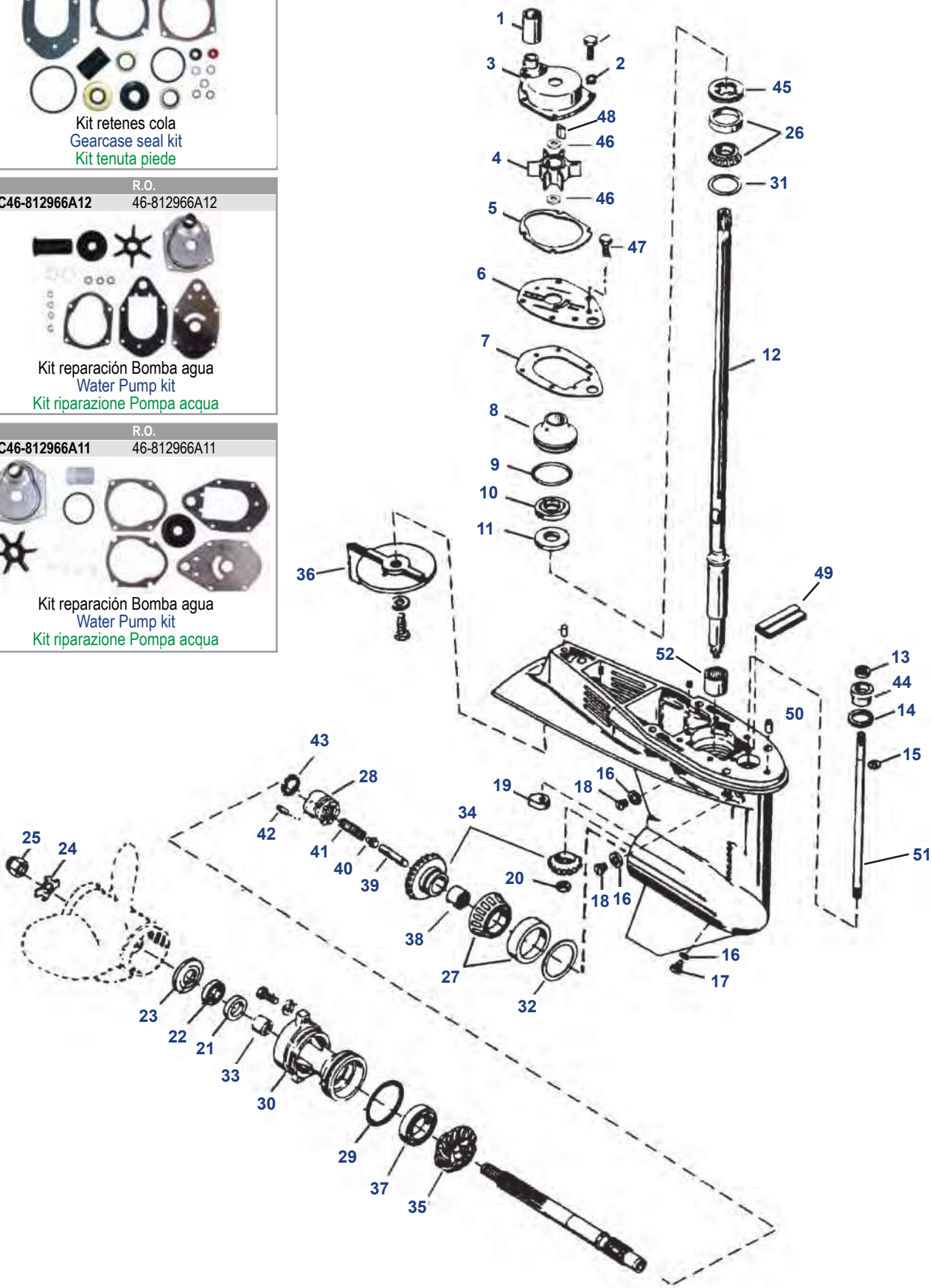

Nº	Ref.	R.O./ OEM	Descripción	Description	Descrizione
1	**REC43023**	43023	TUBO AGUA	TUBE SEAL	TUBO ACQUA
1	**REC893857**	859770-1	TUBO AGUA (4 TIEMPOS)	TUBE SEAL (FOR 4-STROKE)	TUBO ACQUA (4 TEMPI)
2	**REC23-43045**	23-43045	CASQUILLO	INSULATOR	GHIERA
3	**REC14334A3**	14334A3	CUERPO BOMBA AGUA	PUMP HOUSING	CORPO POMPA
4	**REC47-19453T**	47-19453T	IMPULSOR	IMPELLER	GIRANTE
5	**REC27-822189**	27-822189	JUNTA	GASKET	GUARNIZIONE
6	**REC19700A2**	19700A2	TAPA BOMBA AGUA	WEAR PLATE	COPERCHIO POMPA ACQUA
7	**REC27-8M4502052**	27-19701	JUNTA	GASKET	GUARNIZIONE
8	**REC46-812966A7**	46-812966A7	BASE BOMBA AGUA	PUMP BASE	BASE POMPA ACQUA
9	**REC25-30224**	25-30224	ARO TÓRICO	O-RING	O-RING
10	**REC26-814670**	26-814670	RETÉN ACEITE	OIL SEAL	PARAOLIO
11	**REC26-814669**	26-814669	RETÉN ACEITE	OIL SEAL	PARAOLIO
12		45-812731	EJE TRANMISIÓN	DRIVE SHAFT (LONG)	ASSE TRASMISSIONE
13	**REC26-8164641**	26-816464-1	RETÉN ACEITE	OIL SEAL	PARAOLIO
14	**REC25-45258**	25-45258	ARO TÓRICO	O-RING	O-RING
15	**REC53-29641**	53-29641	ARO RETENEDOR	RETAINING RING	O-RING
16	**REC12-191833**	12-19183-3	JUNTA	GASKET	GUARNIZIONE
17	**REC22-67892A05**	22-67892A1	TORNILLO DRENAJE	DRAINING SCREW	VITE DRENAGGIO
18	**REC10-79953Q04**	10-79953Q2	JUEGO TORNILLOS	SCREW KIT	KIT VITE
19	**REC76039-4**	76039-4	LEVA	SHIFT CAM	LEVA
20	**REC313339**	11-55910	TUERCA PIÑÓN	PINION NUT	DADO PIGNONE
21	**REC26-69188**	26-69188	RETÉN ACEITE	OIL SEAL	PARAOLIO
22	**REC26-69189**	26-69189	RETÉN ACEITE	OIL SEAL	PARAOLIO
23	**REC73345A1**	73345A1	TOPE HÉLICE	THRUST HUB	PUNTA ELICA
24	**REC14-76281Q**	14-76281	CIERRE HÉLICE	TAB WASHER	CHIUSURA ELICA
25	**REC11-69578Q1**	11-69758A1	TUERCA HÉLICE	PROP NUT	DADO ELICA
26	**REC31-77420A1**	31-77420A1	COJINETE	BEARING	CUSCINETTO
27	**REC983892**	31-812767A1	COJINETE	BEARING	CUSCINETTO
28	**REC52-850048T**	52-850048T	SELECTOR	CLUTCH DOG	SELETTORE
29	**REC25-815460**	25-815460	ARO TÓRICO	O-RING	O-RING
30	**REC19291A3**	19291A3	COJINETE DIÁBOLO	BEARING CARRIER	CUSCINETTO
31	**REC15-812770A1**	15-812770A1	KIT SUPLEMENTOS	SHIM SET	KIT SPESSORI
32		15-812769A1	KIT SUPLEMENTOS	SHIM SET	KIT SPESSORI
33	**REC31-21700**	31-21700	COJINETE	BEARING	CUSCINETTO
34	**REC43-803499T1**	43-803499T1	KIT PIÑONES MARCHA AVANTE 1.64:1	P/FORWARD GEAR SET (1.64:1 RATIO)	KIT PIGNONE MARCIA AVANTI 1.64:1
35		43-813695T	PIÑÓN MARCHA ATRÁS	REVERSE GEAR	PIGNONE MARCIA INDIETRO
36	**TEN00827**	17264T2	ÁNODO ZINC	TRIM TAB ZINC	ANODO ZINCO
37	**REC30-20839T**	30-20839T	COJINETE	BEARING	CUSCINETTO
38	**REC31-21739**	31-21739	COJINETE	BEARING	CUSCINETTO
39	**REC812929-1**	812929-1	PASADOR	CAM FOLLOWER	CHIAVETTA
40	**REC20843**	20843	PASADOR	SLIDE	CHIAVETTA
41	**REC24-815418**	24-815418	MUELLE	SPRING	MOLLA
42	**REC17-8M0020942**	17-38113	PASADOR	CROSS PIN	CHIAVETTA
43	**REC24-30893**	24-30893	MUELLE	SPRING	MOLLA
44	**REC23-813696A2**	23-813696A2	CUERPO VARILLA CAMBIO	BUSHING ASSEMBLY	SEDE ASTICELLA CAMBIO
45		11-812820-1	TUERCA RETENEDORA	RETAINING NUT	DADO
46	**REC8M0005777**	12-858234	ARANDELA PLÁSTICO	WASHER-PLASTIC	RONDELLA PLASTICA
47		10-824832-4	TORNILLO	SCREW	VITE
48	**REC28-8M0032831**	28-8M0032831	CHAVETA	KEY	CHIAVETTA
49		818226A1	KIT RETÉN	SEAL PLATE KIT	KIT TENUTA
50	**REC17-43043**	17-43043	PASADOR	PIN	SPINOTTO
51	**REC889246A96**	889246A96	EJE CAMBIO	SHIFT SHAFT	ASSE CAMBIO
52	**REC31-812768**	31-812768	RODAMIENTO	BEARING	CUSCINETTO

4 TIEMPOS STROKES — 50-150 HP (1987+) (4.25" / 107.95 mm) Ø TORPEDO BIG FOOT

2 TIEMPOS STROKES — 30-125 HP (3 / 4 CYL) INLINE (4.25" / 107.95 mm) Ø TORPEDO BIG FOOT

Ref.	R.O.
REC26-43035A4	26-43035A4

Kit retenes cola
Gearcase seal kit
Kit tenuta piede

Ref.	R.O.
REC12094	46-43024A7

Kit reparación Bomba agua
Water Pump kit
Kit riparazione Pompa acqua

Ref.	R.O.
REC47-43026Q06	47-43026Q06

Kit reparación Bomba agua
Water Pump kit
Kit riparazione Pompa acqua

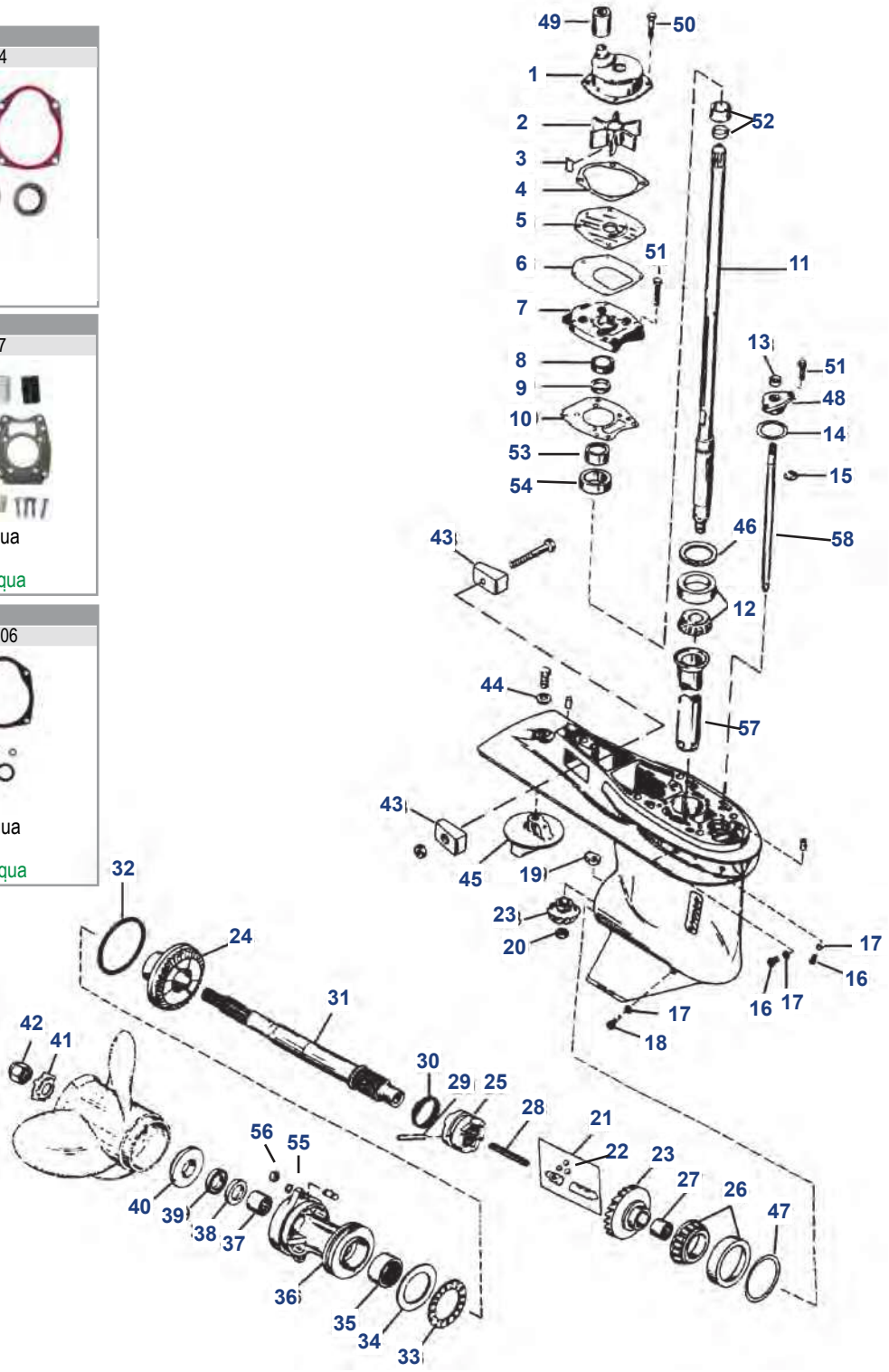

Nº	Ref.	R.O./ OEM	Descripción	Description	Descrizione
1	**REC817275A2**	817275A2	BOMBA AGUA	WATER PUMP ASSEMBLY	POMPA ACQUA
2	**REC47-43026Q02**	47-43026T2	IMPULSOR	IMPELLER	GIRANTE
3	**REC28-8M0032833**	28-43037	CHAVETA	KEY	CHIAVETTA
4	**REC27-8172771**	27-817277-1	JUNTA	GASKET	GUARNIZIONE
5	**REC8172761**	817276-1	TAPA BOMBA	WEAR PLATE	COPERCHIO POMPA
6	**REC27-430331**	27-43033-1	JUNTA	GASKET	GUARNIZIONE
7	**REC43055A4**	43055A4	BASE BOMBA AGUA	PUMP BASE ASSEMBLY	BASE POMPA AQUA
8	**REC26-43036**	26-43036	RETÉN ACEITE	OIL SEAL	PARAOLIO
9	**REC26-43035**	26-43035	RETÉN ACEITE	OIL SEAL	PARAOLIO
10	**REC27-430472**	27-43047-2	JUNTA	GASKET	GUARNIZION
11		45-43031A1	EJE TRANMISIÓN (20" 2 TIEMPOS 70-125HP)	DRIVE SHAFT (LONG) (20" 2 STROKES 70-125 HP)	ASSE TRASMISSIONE (20" 2 TEMPI 70-125 HP)

Nº	Ref.	R.O./ OEM	Descripción	Description	Descrizione
11		45-826736A1	EJE TRANMISIÓN (20" 2 TIEMPOS 50-60 HP)	DRIVE SHAFT (LONG) (20" 2 STROKES 50-60 HP)	ASSE TRASMISSIONE (20" 2 TEMPI 50-60 HP)
11	**REC45-858765T1**	45-858765T1	EJE TRANMISIÓN (20" 4 TIEMPOS 70-115 HP)	DRIVE SHAFT (LONG) (20" 4 STROKES 70-115 HP)	ASSE TRASMISSIONE (20" 4 TEMPI 70-115 HP)
11	**REC45-878575T1**	45-878575T1	EJE TRANMISIÓN (25" 4 TIEMPOS 70-115 HP)	DRIVE SHAFT (LONG) (25" 4 STROKES 70-115 HP)	ASSE TRASMISSIONE (25" 4 TEMPI 70-115 HP)
11	**REC45-854808A1**	45-854808A1	EJE TRANMISIÓN (20" 4 TIEMPOS 30-50 HP)	DRIVE SHAFT (LONG) (20" 4 STROKES 30-50 HP)	ASSE TRASMISSIONE (20" 4 TEMPI 30-50 HP)
11	**REC45-859105A1**	45-859105A1	EJE TRANMISIÓN (20" 4 TIEMPOS 40-60 HP)	DRIVE SHAFT (LONG) (20" 4 STROKES 40-60 HP)	ASSE TRASMISSIONE (20" 4 TEMPI 40-60 HP)
11	**REC45-875222A1**	45-875222A1	EJE TRANMISIÓN (25" 4 TIEMPOS 40-60 HP)	DRIVE SHAFT (LONG) (25" 4 STROKES 40-60 HP)	ASSE TRASMISSIONE (25" 4 TEMPI 40-60 HP)
12	**REC31-42677A1**	31-42677A1	COJINETE	BEARING	CUSCINETTO
13	**REC26-8164641**	26-816464-1	RETÉN ACEITE	OIL SEAL	PARAOLIO
14	**REC25-457101**	25-45710	ARO TÓRICO	O-RING	O-RING
15	**REC53-29641**	53-29641	ARO RETENEDOR	RETAINING RING	O-RING
16	**REC10-79953Q04**	10-79953Q2	JUEGO TORNILLOS	SCREW KIT	KIT VITE
17	**REC12-191833**	12-19183-3	JUNTA	GASKET	GUARNIZIONE
18	**REC22-67892A05**	22-67892A1	TORNILLO DRENAJE	DRAINING SCREW	VITE DRENAGGIO
19	**REC76039-4**	76039-4	LEVA (3 DIENTES)	SHIFT CAM (3 JAW)	LEVA (3 DENTI)
19	**REC850307**	850307	LEVA (6 DIENTES)	SHIFT CAM (6 JAW)	LEVA (6 DENTI)
20	**REC11-35921**	11-35921	TUERCA HÉLICE	PINION NUT	DADO ELICA
21	**REC850315A1**	850315A1	KIT PASADORES LEVA	CAM FOLLOWER KIT	KIT CHIAVETTA LEVA
22		30-44530	BOLA	BALL	PALLA
23		43-803500T1	KIT PIÑONES MARCHA AVANTE REDUCCIÓN 2.31:1, 3 DIENTES	P/FORWARD GEAR SET (2.31:1 RATIO 3 JAW)	KIT PIGNONE MARCIA AVANTE RIDUZZIONE 2.31:1 3 DENTI
23		43-803501T1	KIT PIÑONES MARCHA AVANTE REDUCCIÓN 2.31:1, 6 DIENTES	P/FORWARD GEAR SET (2.31:1 RATIO 6 JAW)	KIT PIGNONE MARCIA AVANTE RIDUZZIONE 2.31:1 6 DENTI
24		43-12635T	MARCHA ATRÁS 3 DIENTES	REVERSE GEAR (3 JAW)	MARCIA INDIETRA (3 DENTI)
24		43-850034T	MARCHA ATRÁS 6 DIENTES	REVERSE GEAR (6 JAW)	MARCIA INDIETRA (6 DENTI)
25	**REC52-822539T**	52-822539T	SELECTOR 3 DIENTES	CLUTCH DOG (3 JAW)	SELETTORE (3 DENTI)
25	**REC52-850048T**	52-850048T	SELECTOR 6 DIENTES	CLUTCH DOG (6 JAW)	SELETTORE (6 DENTI)
26	**REC31-30894A1**	31-30894A1	COJINETE	BEARING	CUSCINETTO
27	**REC31-30895T**	31-30895	COJINETE	BEARING	CUSCINETTO
28		24-30622	MUELLE 3 DIENTES	SPRING (3 JAW)	MOLLA (3 DENTI)
28		24-850327	MUELLE 6 DIENTES	SPRING (6 JAW)	MOLLA (6 DENTI)
29	**REC17-8M0084681**	17-30632	PASADOR	CROSS PIN	CHIAVETTA
30	**REC24-30893**	24-30893	MUELLE	SPRING	MOLLA
31	**REC44-12238T**	44-12238T	EJE HÉLICE 3 DIENTES	PROP SHAFT (3 JAW)	ASSE ELICA (3 DENTI)
31	**REC44-850308**	44-850308	EJE HÉLICE 6 DIENTES	PROP SHAFT (6 JAW)	ASSE ELICA (6 DENTI)
32	**REC310414**	25-97386	ARO TÓRICO	O-RING	O-RING
33	**REC31-12576**	31-12576	COJINETE	THRUST BEARING	CUSCINETTO
34	**REC12-12577**	12-12577	ARANDELA	THRUST WASHER	RONDELLA
35	**REC31-12578T**	31-12578T	COJINETE	BEARING	CUSCINETTO
36	**REC12596T2**	12596T2	COJINETE DIÁBOLO	BEARING CARRIER	CUSCINETTO
37	**REC387247**	31-30956	COJINETE	BEARING	CUSCINETTO
38	**REC26-76868**	26-76868	RETÉN ACEITE	OIL SEAL	PARAOLIO
39	**REC26-70081**	26-70081	RETÉN ACEITE	OIL SEAL	PARAOLIO
40	**REC13191Q01**	13191A1	TOPE HÉLICE	THRUST HUB	PUNTA ELICA
41	**REC90508-ZW1-003**	14-816629Q	CIERRE HÉLICE	TAB WASHER	CHIUSURA ELICA
42	**REC90301-ZW1-003**	11-52407Q1	TUERCA HÉLICE	PROP NUT	DADO ELICA
43	**CM826134**	826134Q	ÁNODO ZINC	ANODE ZINC	ANODO ZINCO
43	**CM826134A**	826134Q	ÁNODO ALUMINIO	ANODE ALUMINUM	ANODO ALLUMINIO
44	**REC12-45176**	12-45176	ARANDELA	WASHER	RONDELLA
45	**CM31640**	31640Q4	ÁNODO ZINC	TRIM TAB ZINC	ANODO ZINCO
45	**CM31640A**	31640Q4	ÁNODO ALUMINIO	TRIM TAB ALUMINUM	ANODO ALLUMINIO
46	**REC15-8M0063265**	15-44492A1	KIT SUPLEMENTOS	SHIM SET	KIT SUPPLEMENTI
47	**REC15-44491A1**	15-44491A1	KIT SUPLEMENTOS	SHIM SET	KIT SUPPLEMENTI
48	**REC23-43052A4**	23-43052A4	CASQUILLO	BUSHING ASSEMBLY	GHIERA
49	**REC43023**	43023	TUBO AGUA BLANCO	WATER TUBE SEAL (WHITE)	TUBO ACQUA BIANCO
49	**REC43023-2**	43023-2	TUBO AGUA NEGRO	WATER TUBE SEAL (BLACK)	TUBO ACQUA NERO
50	**REC10-82684430**	10-826844-30	TORNILLO	SCREW	VITE
51		10-826844-25	TORNILLO	SCREW	VITE
52	**REC42461A1**	42461A1	CASQUILLO	SLEEVE / RING KIT	GHIERA
53	**REC26-43036**	26-43036	RETÉN SUPERIOR	SEAL UPPER	TENUTA SUPERIORE
54	**REC26-43035**	26-43035	RETÉN INFERIOR	SEAL LOWER	TENUTA INFERIORE
55	**REC12-855941**	12-855941	ARANDELA	WASHER	RONDELLA
56	**REC11-401378**	11-401378	TUERCA	NUT	DADO
57	**REC43046**	43046	MANGUITO ACEITE	OILER TUBE	TUBO OLIO
58	**REC853906A1**	853906A1	EJE CAMBIO 20"	SHIFT SHAFT 20"	ASSE CAMBIO 20"
58	**REC853908A1**	853908A1	EJE CAMBIO 25"	SHIFT SHAFT 25"	ASSE CAMBIO 25"

135-300 HP VERADO 4, 6 CYL (2006+)

Ref.	R.O.
REC817275A09	817275A09

Kit reparación Bomba agua
Water Pump kit
Kit riparazione Pompa acqua

Ref.	R.O.
REC47-43026Q06	47-43026Q06

Kit reparación Bomba agua
Water Pump kit
Kit riparazione Pompa acqua

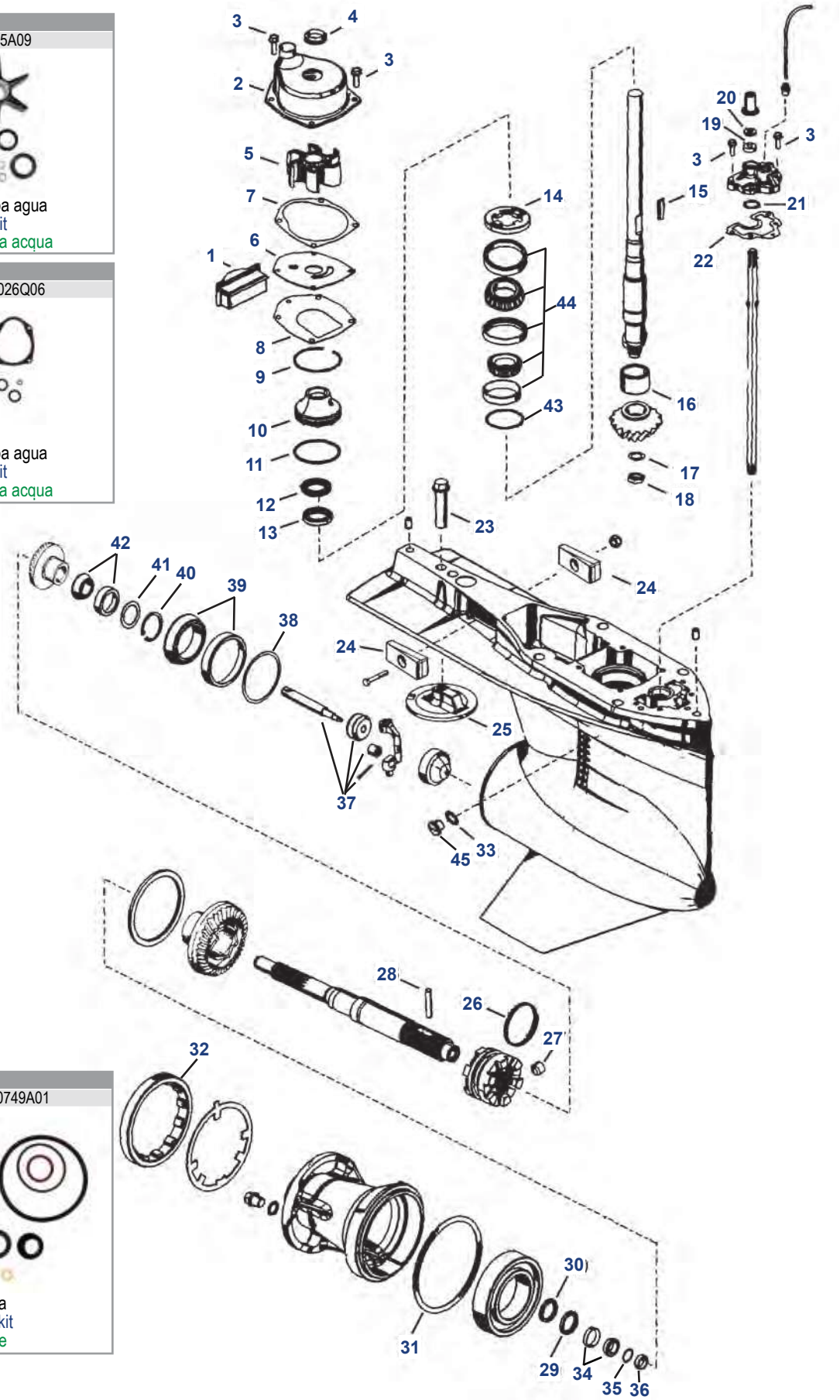

Ref.	R.O.
REC26-830749A01	26-830749A01

Kit retenes cola
Gearcase seal kit
Kit tenuta piede

Nº	Ref.	R.O./OEM	Descripción	Description	Descrizione
1	**REC821526001**	821526001	RETÉN	FILLER BLOCK	CORPO SUPERIORE POMPA
2	**REC817275A1**	817275A1	CUERPO SUPERIOR BOMBA	UPPER WATER PUMP HOUSING	VITE (M6-16)
3	**REC10-816928**	10-816928	TORNILLO (M6-16)	SCREW (M6-16)	PARAOLIO
4	**REC26-816575A2**	26-816575A2	RETÉN	FACE SEAL	GIRANTE
5	**REC47-43026Q02**	47-43026T2	IMPULSOR	IMPELLER	COPERCHIO POMPA
6	**REC8172761**	817276-1	TAPA BOMBA	WEAR PLATE	GUARNIZIONE
7	**REC27-8172771**	27-817277-1	JUNTA	GASKET	GUARNIZIONE
8	**REC27-430331**	27-43033-1	JUNTA	GASKET	O-RING
9	**REC53-880719**	53-880719	ARO RETENEDOR	RETAINING RING	BASE POMPA
10	**REC8M0007131**	888909A1	BASE BOMBA	PUMP BASE	O-RING
11	**REC25-896523**	25-896523	ARO TÓRICO	O-RING	PARAOLIO
12	**REC26-888920**	26-888920	RETÉN ACEITE	OIL SEAL	PARAOLIO
13	**REC26-888921**	26-888921	RETÉN ACEITE	OIL SEAL	FERMO
14	**REC8245191**	824519-1	RETENEDOR	RETAINER	CHIAVETTA
15	**REC28-8M0032833**	28-43037	CHAVETA	KEY	CUSCINETTO
16	**REC387817**	31-42647A1	COJINETE	BEARING	RONDELLA
17	**REC350038**	12-92721	ARANDELA	WASHER	DADO
18	**REC11-35921**	11-35921	TUERCA	NUT	PARAOLIO
19	**REC26-8164641**	26-816464-1	RETÉN ACEITE	OIL SEAL	RONDELLA
20	**REC12-77674**	12-77674	ARANDELA	WASHER	O-RING
21	**REC25-36318**	25-896322	ARO TÓRICO	O-RING	GUARNIZIONE
22	**REC27-880729**	27-880729	JUNTA	GASKET	VITE
23	**REC10-806327**	10-806327	TORNILLO	SCREW	ANODO ALLUMINIO
24	**CM826134A**	826134Q	ÁNODO ALUMINIO	ANODE ALUMINUM	ANODO
24	**CM826134**	826134Q	ÁNODO	ANODE	ANODO
25	**CM76214**	76214Q5	ÁNODO	ANODIC PLATE	ANODO ALLUMINIO
25	**CM762145A**	76214Q5	ÁNODO ALUMINIO	ANODIC PLATE ALUMINUM	MOLLA
26	**REC24-30893**	24-30893	MUELLE	SPRING	PERNO DI FERMO
27	**REC17-828356**	17-828356	PASADOR	DETENT PIN	CHIAVETTA
28	**REC17-8M0084681**	17-30632	PASADOR	CROSS PIN	PARAOLIO
29	**REC26-888483**	26-888906	RETÉN ACEITE	OIL SEAL	PARAOLIO
30	**REC26-888483**	26-888483	RETÉN ACEITE	OIL SEAL	O-RING
31	**REC25-31534**	26-896524	ARO TÓRICO	O-RING	DADO
32	**REC8M2011027**	79448	TUERCA	COVER NUT	PARAOLIO
33	**REC26-830749**	26-830749	RETÉN	OIL SEAL	CUSCINETTO
34	**REC31-884330T01**	31-884330T01	RODAMIENTO	BEARING	SUPPLEMENTI
35	**REC15-891936A01**	15-891936A01	KIT SUPLEMENTOS	SHIM KIT	KIT DISTANZIALE
36	**REC23-891919001**	23-891919001	ESPACIADOR	SPACER	SPESSORE
37	**REC19755T7**	19755T7	EJE KIT	SHIFT SPOOL	KIT ASSE
38		15-884328A01	KIT SUPLEMENTOS	SHIM KIT	KTI SUPPLEMENTI
39	**REC31-884323T01**	31-884323T01	RODAMIENTO	BEARING	CUSCINETTO
40	**REC53-8M0051043**	53-8M0051043	CLIP	CLIP	CLIP
41	**REC8M0053823**	8M0053823	ARANDELA	WASHER	RONDELLA
42	**REC31-884325T01**	31-884325T01	RODAMIENTO	BEARING	CUSCINETTO
43	**REC15-38657A1**	15-38657A1	SUPLEMENTOS	SHIM KIT	SUPPLEMENTI
44	**REC15-884327A02**	15-884327A01	KIT RODAMIENTOS	BEARING KIT	KIT CUSCINETTO
45	**REC10-79953Q04**	10-79953Q04	TORNILLO	BOLT	VITE

3.9, 4, 4.5, 6, 7.5, 9.8 HP (1975-86)

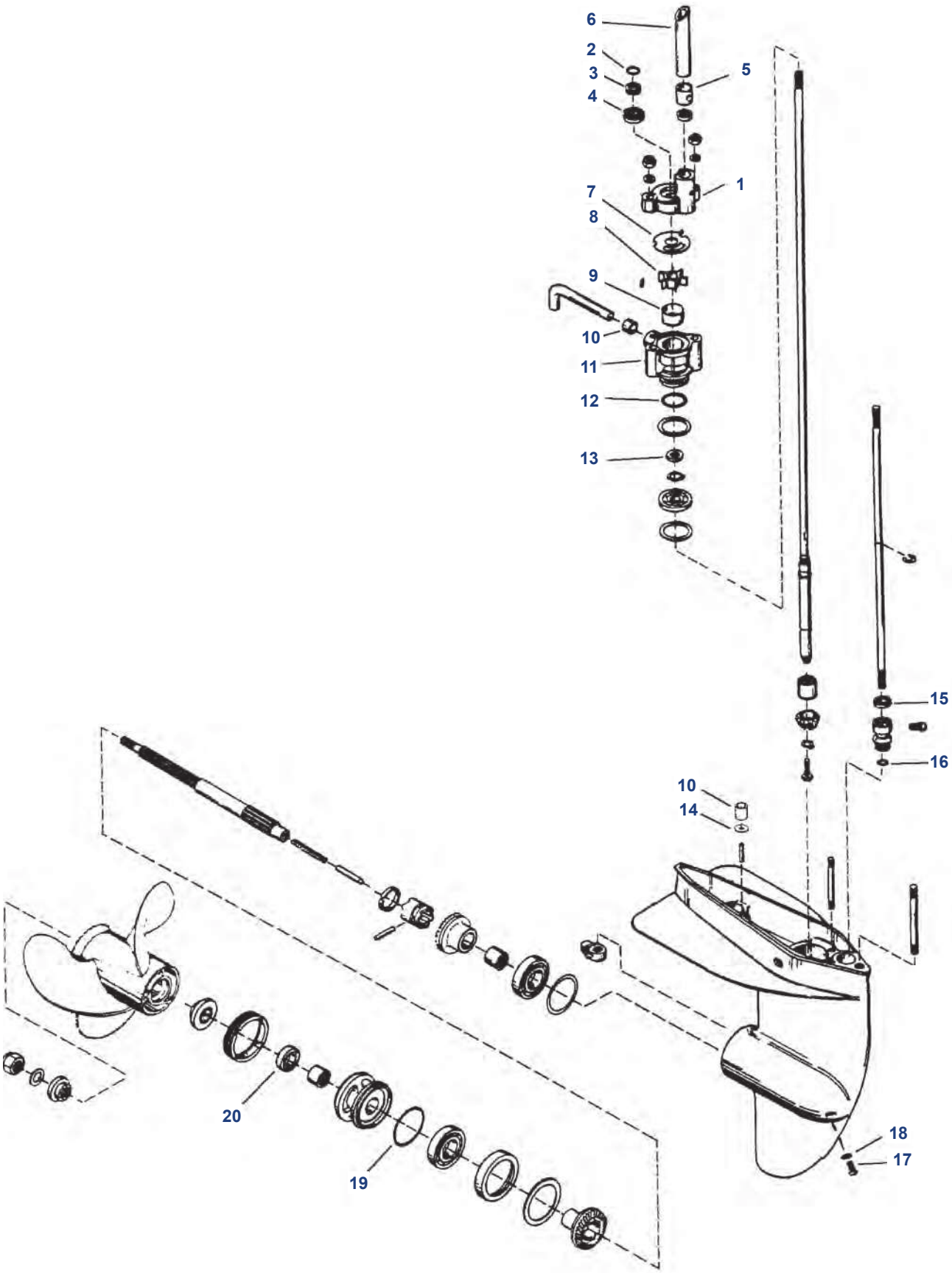

Nº	Ref.	R.O./ OEM	Descripción	Description	Descrizione
1	**REC93224A1**	93224A1	CUERPO BOMBA	PUMP HOUSING	CORPO POMPA
2	**REC3852045**	25-62704	ARO TÓRICO	O-RING	O-RING
3		25-30526	RETÉN	SEAL	PARAOLIO
4	**REC26-30913**	26-30913	RETÉN ACEITE	OIL SEAL	PARAOLIO
5	**REC26-36558**	26-36558	GRUESO	GROMMET	SPESSORE
6		23-31792	TUBO GUÍA	GUIDE TUBE	TUBO GUIDA
7	**REC46895**	46895	TAPA BOMBA	WEAR PLATE	COPERCHIO POMPA
8	**REC47-89980**	47-89980	IMPULSOR	IMPELLER (0.438 I.D.)	GIRANTE
8	**REC47-89981**	47-89981	IMPULSOR	IMPELLER (0.456 I.D.)	GIRANTE
9	**REC70977T**	70977	TAPA BOMBA	PUMP CUP	COPERCHIO POMPA
10	**REC26-33613**	26-33613	RETÉN	SEAL	TENUTA
11	**REC46-70941T01**	46-70941A1	BASE BOMBA USAR CON IMPULSOR REC47-89981	PUMP BASE (USE WITH REC47-89981 IMPELLER)	BASE POMPA DA UTILIZZARE CON GIRANTE REC47-89981
12	**REC309731**	25-29439	ARO TÓRICO	O-RING	O-RING
13	**REC327031**	26-30900	RETÉN ACEITE BASE BOMBA REC46-70941T01	OIL SEAL (FOR REC46-70941T01 PUMP BASE)	PARAOLIO BASE POMPA REC46-70941T01
13	**REC26-897153**	26-96063	RETÉN ACEITE BASE BOMBA REC46-92970A1	OIL SEAL (FOR REC46-92970A1 PUMP BASE)	PARAOLIO BASE POMPA REC46-92970A1
14	**REC23-86215**	23-86215	ESPACIADOR	SPACER	SPESSORE
15		26-30696	RETÉN ACEITE	OIL SEAL	PARAOLIO
16	**REC303347**	25-26802	ARO TÓRICO	O-RING	O-RING
17	**REC10-79953Q04**	10-79953Q2	JUEGO TORNILLO	SCREW SET	KIT VITE
18	**REC12-191833**	12-20260	JUNTA	GASKET	GUARNIZIONE
19	**REC25-30529**	25-30529	ARO TÓRICO	O-RING	O-RING
20	**REC26-66022**	26-66022	RETÉN ACEITE	OIL SEAL	PARAOLIO

Ref.	R.O.
REC46-70941A3	46-70941A3

Kit reparación Bomba agua
Water Pump kit
Kit riparazione Pompa acqua

Ref.	R.O.
REC47-89980T1	47-89980T1

Kit reparación Bomba agua
Water Pump kit
Kit riparazione Pompa acqua

Ref.	R.O.
REC47-89981Q1	47-89981Q1

Kit reparación Bomba agua
Water Pump kit
Kit riparazione Pompa acqua

Ref.	R.O.
REC26-77066A1	26-77066A1

Kit retenes cola
Gearcase seal kit
Kit tenuta piede

30-70 HP (2, 3, 4 CYL) (1977-97)

Ref.	R.O.
REC46-77177A3	46-77177A3

Kit reparación Bomba agua
Water Pump kit
Kit riparazione Pompa acqua

Ref.	R.O.
REC47-89983Q1	47-89983Q1

Kit reparación Bomba agua
Water Pump kit
Kit riparazione Pompa acqua

Ref.	R.O.
REC26-79831A1	26-79831A1

Kit reparación Bomba agua
Water Pump kit
Kit riparazione Pompa acqua

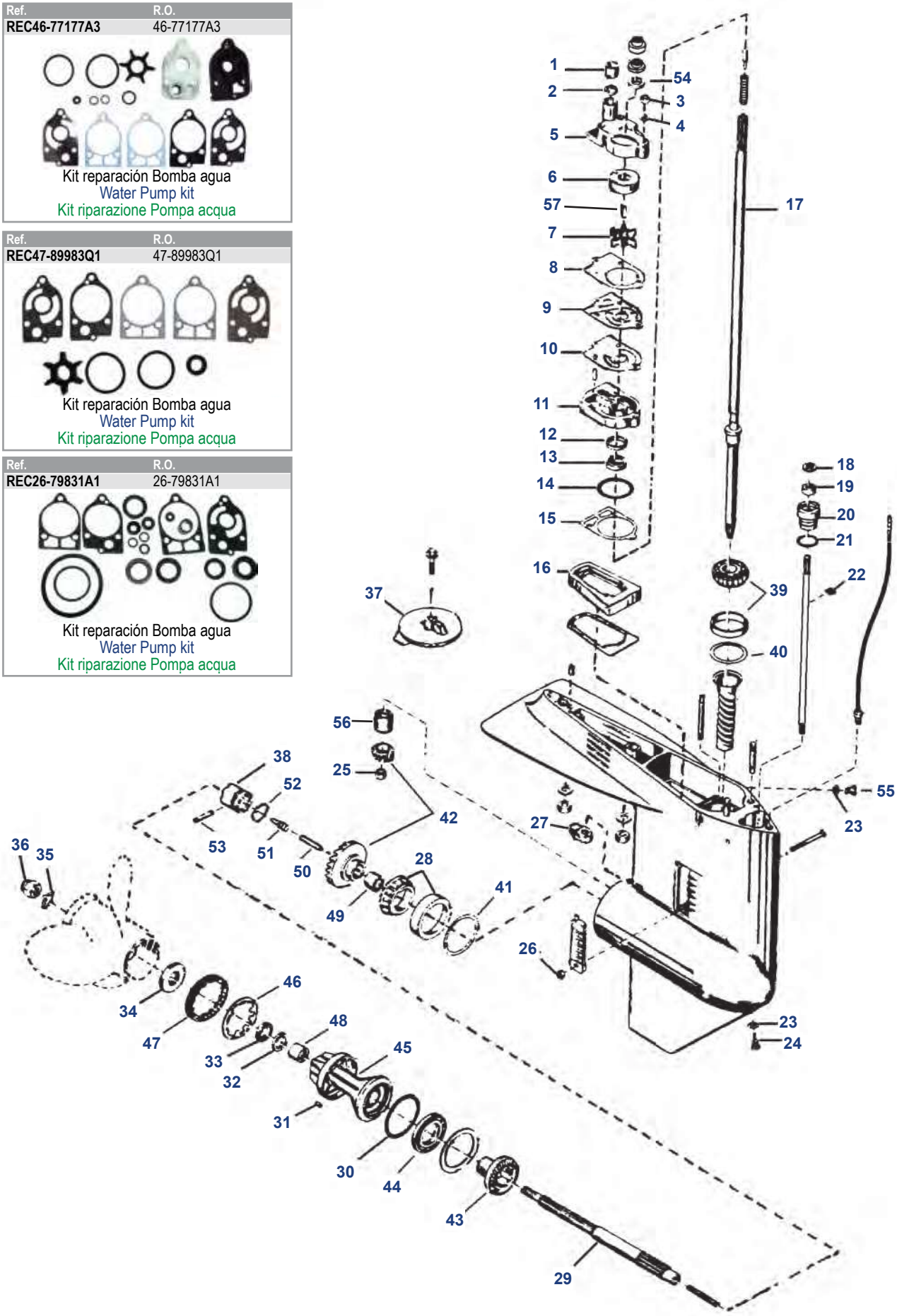

Nº	Ref.	R.O./ OEM	Descripción	Description	Descrizione
1	**REC26-38452**	26-38452	GRUESO	GROMMET	SPESSORE
2	**REC12-38453**	12-38453	JUNTA	GASKET	GUARNIZIONE
3	**REC11-8267089**	11-13438	CIERRE	LOCK NUT	CHIUSURA
4	**REC12-29245**	12-29245	ARANDELA	WASHER	RONDELLA
5	**REC46-77822A1**	46-77822A1	CUERPO BOMBA AGUA	WATER PUMP HOUSING	CORPO POMPA ACQUA
6	**REC48753**	48753	TAPA BOMBA AGUA	WATER PUMP CUP	COPERCHIO POMPA ACQUA
7	**REC47-89983T**	47-89983T	IMPULSOR	IMPELLER	GIRANTE
8	**REC27-19551**	27-19551	JUNTA	GASKET	GUARNIZIONE
9	**REC32768**	32768	TAPA BOMBA	WEAR PLATE	COPERCHIO POMPA
10	**REC27-19553**	27-19553	JUNTA	GASKET	GUARNIZIONE
11	**REC46-77177A1**	46-77177A1	BASE BOMBA AGUA	WATER PUMP BASE	BASE POMPA ACQUA
12	**REC26-90562**	26-90562	RETÉN ACEITE	OIL SEAL	PARAOLIO
13	**REC26-79831**	26-79831	RETÉN ACEITE	OIL SEAL	PARAOLIO
14	**REC302588**	25-26722	ARO TÓRICO	O-RING	O-RING
15	**REC27-19552**	27-19552	JUNTA	GASKET	GUARNIZIONE
16	**REC37721001**	37721	RETÉN	SEAL	TENUTA
17		45-98180	EJE LARGO	DRIVE SHAFT (LONG)	ASSE LUNGO
18	**REC12-77674**	12-77674	JUNTA	GASKET	GUARNIZIONE
19	**REC26-8164641**	26-816464-1	RETÉN ACEITE	OIL SEAL	PARAOLIO
20	**REC23-77631A2**	23-77631A2	ACOPLE EJE	BUSHING ASSEMBLY	ACCOPPIO ASSE
21	**REC25-25439**	25-25439	ARO TÓRICO	O-RING	O-RING
22	**REC53-29641**	53-29641	ARO RETENEDOR	RETAINING RING	O-RING
23	**REC12-191833**	12-19183-3	JUNTA	GASKET	GUARNIZIONE
24	**REC22-67892A05**	22-67892A1	TORNILLO DRENAJE	DRAINING SCREW	VITE DRENAGGIO
25	**REC313339**	11-55910	TUERCA PIÑÓN	PINION NUT	DADO PIGNONE
26	**REC11-859124**	11-45812	CIERRE TUERCA	LOCK NUT	CHIUSURA DADO
27	**REC76039-4**	76039-4	LEVA	SHIFT CAM	LEVA
28	**REC31-38356A1**	31-38356A1	COJINETE	BEARING	CUSCINETTO
29		44-75365	EJE HÉLICE	PROP SHAFT	ASSE ELICA
30	**REC3852866**	25-31986	ARO TÓRICO	O-RING	O-RING
31	**REC28-30281**	28-30281	CHAVETA	KEY	CHIAVETTA
32	**REC26-69188**	26-69188	RETÉN ACEITE	OIL SEAL	PARAOLIO
33	**REC26-69189**	26-69189	RETÉN ACEITE	OIL SEAL	PARAOLIO
34	**REC73345A1**	73345A1	TOPE HÉLICE	THRUST HUB	PUNTA ELICA
35	**REC14-76281Q**	14-76281	CIERRE HÉLICE	TAB WASHER	CHIUSURA ELICA
36	**REC11-69578Q1**	11-69578A1	TUERCA HÉLICE	PROP NUT	DADO ELICA
37	**CM31640A**	31640Q4	ÁNODO ALUMINIO	ANODE ALUMINUM	ANODO ALLUMINIO
37	**CM31640**	31640Q4	ÁNODO ZINC	ANODE ZINC	ANODO ZINCO
38		52-92911T	SELECTOR	CLUTCH DOG	SELETTORE
39	**REC31-77420A1**	31-77420A1	COJINETE	BEARING	CUSCINETTO
40	**RM15-92881A1**	15-92881A1	KIT SUPLEMENTOS	SHIM SET	KIT SUPPLEMENTI
41		15-38374A1	KIT SUPLEMENTOS	SHIM SET	KIT SUPPLEMENTI
42		43-803497T1	KIT PIÑONES MARCHA AVANTE	P/FORWARD GEAR SET	KIT PIGNONI MARCIA IN AVANTI
43		43-79158T	MARCHA ATRÁS	REVERSE GEAR	MARCIA INDIETRO
44	**REC30-20839T**	30-20839T	COJINETE	BEARING	CUSCINETTO
45		69386A1	COJINETE DIÁBOLO	BEARING CARRIER	CUSCINETTO
46		14-53012	ARANDELA	KEYED WASHER	RONDELLA
47		11-87763	TUERCA	COVER NUT	DADO
48	**REC31-21700**	31-21700	COJINETE	BEARING	CUSCINETTO
49	**REC31-21739**	31-21739	COJINETE	BEARING	CUSCINETTO
50		38441	PASADOR	CAM FOLLOWER	CHIAVETTA
51	**REC20843**	20843	PASADOR	SLIDE	CHIAVETTA
52	**REC24-38114**	24-38114	MUELLE	SPRING	MOLLA
53	**REC17-8M0020942**	17-38113	PASADOR	CROSS PIN	CHIAVETTA
54	**REC25-20273**	25-20273	PASADOR	SLINGER	CHIAVETTA]
55	**REC10-79953Q04**	10-79953Q2	JUEGO TORNILLOS	SCREW SET	KIT VITE
56	**REC31-62091T**	31-6291T	RODAMIENTO	BEARING	CUSCINETTO
57	**REC8M0032837**	8M0032837	CHAVETA	KEY	CHIAVETTA

2 TIEMPOS STROKES

2.0, 2.4, 2.5 / V6
L4, L6, V6 (65-225 HP)

Ref.	R.O.
REC47-89984Q5	47-89984Q5

Kit reparación Bomba agua
Water Pump kit
Kit riparazione Pompa acqua

Ref.	R.O.
REC46-96148A8	46-96148A8

Kit reparación Bomba agua
Water Pump kit
Kit riparazione Pompa acqua

Ref.	R.O.
REC26-55682A1	26-55682A1

Kit retenes cola
Gearcase seal kit
Kit tenuta piede

Ref.	R.O.
REC11-52707Q1	11-52707Q1

Kit cierre hélice
Prop nut kit
Kit chiusura elica

Nº	Ref.	R.O./OEM	Descripción	Description	Descrizione
1	**REC23-29804T**	23-29804	TUBO GUÍA	TUBE GUIDE	TUBO GUIDA
2	**REC26-38970**	26-38970	RETÉN	SEAL	TENUTA
3	**REC11-8267089**	11-13438	TUERCA	NUT	DADO
4	**REC12-29245**	12-29245	ARANDELA	WASHER	RONDELLA
5	**REC10-96411**	10-96411	TORNILLO	SCREW	VITE
6	**REC25-30271**	25-30271	PASADOR	SLINGER	CHIAVETTA
7	**REC11-13436**	11-13436	TUERCA	NUT	DADO
8		12-36001	ARANDELA	WASHER	RONDELLA
9	**REC46-96148T1**	46-96148T1	CUERPO BOMBA	PUMP HOUSING	CORPO POMPA
10	**REC48752T**	48752T	TAPA BOMBA	PUMP CUP	COPERCHIO POMPA
11	**REC47-89984T4**	47-89984T4	IMPULSOR	IMPELLER	GIRANTE
12	**REC8M0032834**	28-56654	CHAVETA	KEY	CHIAVETTA
13	**REC27-858524**	27-858524	JUNTA	GASKET	GUARNIZIONE

Nº	Ref.	R.O./OEM	Descripción	Description	Descrizione
14	**REC324351**	32435	CIERRE BOMBA	WEAR PLATE	CHIUSURA POMPA
15	**REC27-856081**	27-85608-1	JUNTA	GASKET	GUARNIZIONE
16	**REC46-8M0077147**	46-42579A3	BASE BOMBA	PUMP BASE	BASE POMPA
17	**REC26-16977**	26-16977	RETÉN ACEITE	OIL SEAL	PARAOLIO
18	**REC26-89238**	26-89238	RETÉN ACEITE	OIL SEAL	PARAOLIO
19	**REC25-90011**	25-90011	ARO TÓRICO	O-RING	O-RING
20	**REC27-426311**	27-42631-1	JUNTA	GASKET	GUARNIZIONE
21	**REC8245191**	824519-1	RETENDOR	RETAINER	RITENETORE
22	**REC31-36387A1**	31-36387A1	COJINETE	BEARING	CUSCINETTO
22	**REC31-53079A1**	31-63079A1	COJINETE PARA EJE 11163	BEARING	CUSCINETTO
22		31-69220T	COJINETE PARA EJE 11162	BEARING	CUSCINETTO
23	**REC15-42637A1**	15-42637A1	KIT SUPLEMENTOS	SHIM SET	KIT SUPPLEMENTI
24		45-44000-1	EJE COLA 20" MODELOS V	DRIVE SHAFT 20" V MODELS	ASSE PIEDE 20" V MODELLO
24		45-42646	EJE COLA	DRIVE SHAFT	ASSE PIEDE
24		45-98682A1	EJE TRANSMISIÓN	DRIVE	ASSE TRASMISIONE
25	**REC12-77674**	12-77674	JUNTA	GASKET	GUARNIZIONE
26	**REC26-8164641**	26-816464-1	RETÉN ACEITE	OIL SEAL	PARAOLIO
27	**REC23-77631A2**	23-77631A2	CASQUILLO	BUSHING	GHIERA
28	**REC25-25439**	25-25439	ARO TÓRICO	O-RING	O-RING
29	**REC387817**	31-42647A1	COJINETE MODELOS V6	BEARING V6 MODELS	CUSCINETTO MODELLO V6
29	**REC31-32898T**	31-32898T	COJINETE MODELOS EN LÍNEA	BEARING INLINE MODELS	CUSCINETTO MODELLO IN LINIA
30	**REC350038**	12-92721	ARANDELA	WASHER	RONDELLA
31	**REC11-35921**	11-35921	TORNILLO	NUT	VITE
32	**REC12-191833**	12-19183-3	JUNTA	GASKET	GUARNIZIONE
33	**REC22-67892A05**	22-67892A1	TORNILLO DRENAJE	DRAINING SCREW	VITE DRENAGGIO
34	**CM826134**	826134Q	ÁNODO ZINC	ANODE ZINC	ANODO ZINCO
34	**CM826134A**	826134Q	ÁNODO ALUMINIO	ANODE ALUMINUM	ANODO ALLUMINIO
35		43-68548T3	PIÑÓN ATAQUE	PINION GEAR (STRAIGHT)	ATTACCO PIGNONE
35		43-68447T1	MARCHA AVANTE RECTO	FORWARD GEAR (STRAIGHT)	MARCIA IN AVANTI RETTO
35		43-44102A7 43-803619T1	MARCHA AVANTE 2.00:1	P/FORWARD GEAR (2.00:1)	MARCIA IN AVANTI (2.00:1)
35		43-44104A8 43-803615T2	MARCHA AVANTE 1.87:1	P/FORWARD GEAR (1.87:1)	MARCIA IN AVANTI (1.87:1)
35	**REC43-859321A3**	43-859321A3	MARCHA AVANTE 1.75:1	P/FORWARD GEAR (1.75:1)	MARCIA IN AVANTI (1.75:1)
36		43-76250T	MARCHA ATRÁS RECTO 2.0:1	REVERSE GEAR (STRAIGHT) 2.0:1	MARCIA INDIETRO RETTO 2.0:1
36		43-824987A2	MARCHA ATRÁS 2:1	REVERSE GEAR 2:1	MARCIA INDIETRO 2:1
36		43-85462T	MARCHA ATRÁS. PIN	REVERSE GEAR. PIN	MARCIA INDIETRO. PIN
36		43-824986A2	MARCHA ATRÁS 1.87:1	REVERSE GEAR 1.87:1	MARCIA INDIETRO 1.87:1
36		43-859322A1	MARCHA ATRÁS 1.78:1	REVERSE GEAR 1.75:1	MARCIA INDIETRO 1.75:1
37	**REC89594A1**	89594A1	KIT PASADORES	CAM FOLLOWER KIT	KIT CHIAVETTA
38		79911A1	KIT BARRAS CON PASADOR	ROD KIT RATCHETING VERSION	KIT SBARRE CON SPINOTTO
38		828827	BARRA SIN PASADOR	ROD NON-RATCHETING VERSION	SBARRA SENZA SPINOTTO
39	**REC10-79953Q04**	10-79953Q2	KIT TORNILLOS	SCREW SET	KIT VITI
40	**REC17-78906**	17-78906	PASADOR	PIN	CHIAVETTA
41	**REC12-78910**	12-78910	ARANDELA	WASHER	RONDELLA
42	**REC24-79910**	24-79910	MUELLE	SPRING	MOLLA
43	**REC15-47397A1**	15-47397A1	KIT SUPLEMENTOS	SHIM SET	KIT SUPPLEMENTI
44	**REC31-30894A1**	31-30894A1	COJINETE MODELOS EN LÍNEA	BEARING INLINE MODELS	CUSCINETTO MODELLO IN LINIA
44	**REC31-78172A1**	31-78172A1	COJINETE MODELOS V 3.543"	BEARING V-MODELS 3.543"	CUSCINETTO MODELLO V 3.543"
45	**REC382343**	31-54928-1	COJINETE MODELOS V	BEARING V-MODELS	CUSCIENTTO MODELLO V
45	**REC31-30895T**	31-30895T	COJINETE MODELOS EN LÍNEA	BEARING INLINE MODELS	CUSCINETTO MODELLO IN LINIA
46	**REC52-853594T**	52-853594T	SELECTOR	CLUTCH DOG	SELETTORE
46	**REC52-822539T**	52-822539T	SELECTOR MODELOS EN LÍNEA	CLUTCH DOG INLINE MODELS	SELETTORE MODELLO IN LINIA
46		52-823174T	SELECTOR MODELOS V CON PASADOR	CLUTCH DOG V-MODELS RACHETING	SELETTORE MODELLO V CON SPINOTTO
46	**REC52-859340T**	52-859340T	SELECTOR MODELOS V SIN PASADOR	CLUTCH DOG V-MODELS NON-RACHETING	SELETTORE MODELLO V SENZA SPINOTTO
47	**REC17-8M0084681**	17-30632	PASADOR MODELOS EN LÍNEA	CROSS PIN INLINE MODELS	CHIAVETTA MODELLO IN LINIA
47	**REC17-8M0084243**	17-78905	PASADOR MODELOS V	CROSS PIN V-MODELS	CHIAVETTAMODELLO V
48		17-78909	PASADOR (VERSIÓN 1 PIN)	DETENT PIN (SINGLE PIN VERSION)	CHIAVETTA(1 SPINOTTO)
48	**REC17-828356**	17-828356	PASADOR (VERSIÓN 2 PINES)	DETENT PIN (DOUBLE PIN VERSION)	CHIAVETTA (2 SPINOTTI)
49	**REC24-30893**	24-30893	MUELLE (VERSIÓN SIMPLE)	SPRING (SINGLE VERSION)	MOLLA (VERSIONE SIMPLE)
49	**REC24-78962**	24-78962	MUELLE (VERSIÓN DOBLE)	SPRING (DOUBLE VERSION)	MOLLA (VERSIONE DOPPIA)
50	**REC44-94148**	44-94148	EJE HÉLICE (V6)	PROP SHAFT (V6)	ASSE ELICA (V6)
50		44-93003	EJE HÉLICE (6 EN LÍNEA)	PROP SHAFT (6 IN LINE)	ASSE ELICA (6 IN LINIA)
51	**REC23-824108**	23-824108	ESPACIADOR	THRUST SPACER	DISTANZIALE
52	**REC681001**	68100-1	ARO	THRUST RING	O-RING
53	**REC30-88957T**	30-88957T	COJINETE	BEARING	CUSCINETTO
54	**REC25-31534**	25-896524	ARO TÓRICO	O-RING	O-RING
55	**REC28-30281**	28-30281	CHAVETA	KEY	CHIAVETTA
56	**REC387247**	31-30956T	COJINETE	BEARING	CUSCINETTO
57	**REC26-76868**	26-76868	RETÉN ACEITE	OIL SEAL	PARAOLIO
58	**REC26-12224**	26-12224	RETÉN ACEITE	OIL SEAL	PARAOLIO
59	**REC14-79447**	14-79447	ARANDELA CIERRE	KEYED WASHER	RONDELLA CHIUSURA
60	**REC8M2011027**	79448	TOPE TUERCA	COVER NUT	PUNTA DADO
61	**REC12-835467Q01**	12-835467-1	TOPE HÉLICE	THRUST HUB	PUNTA ELICA
62	**REC13-423511**	13-42351-1	CIERRE HÉLICE	LOCKWASHER	CHIUSURA ELICA
63	**REC12-31211Q03**	12-31211A3	ARANDELA	WASHER	RONDELLA
64	**REC90508-ZW1-003**	14-816629Q	ARANDELA	TAB WASHER	RONDELLA
65	**REC90301-ZW1-003**	11-827614	TUERCA	LOCK NUT	DADO
66	**REC434391**	43567T1	COJINETE DIÁBOLO	BEARING CARRIER	CUSCINETTO
67		76062A1	EJE CAMBIO LARGO	SHIFT SHAFT (LONG)	ASSE CAMBIO LUNGO
68	**REC53-29641**	53-29641	ARO RETENEDOR	RETAINING RING	O-RING

3.0L: 225 CARB / 225, 250 EFI, DFI

Ref.	R.O.
REC817275A6	817275A6

Kit reparación Bomba agua
Water Pump kit
Kit riparazione Pompa acqua

Ref.	R.O.
REC47-43026Q06	47-43026Q06

Kit reparación Bomba agua
Water Pump kit
Kit riparazione Pompa acqua

Ref.	R.O.
REC26-816575A5	26-816575A5

Kit retenes cola
Gearcase seal kit
Kit tenuta piede

Ref.	R.O.
REC26-816575A4	26-816575A4

Kit retenes cola
Gearcase seal kit
Kit tenuta piede

Ref.	R.O.
REC11-52707Q1	11-52707Q1

Kit cierre hélice
Prop nut kit
Kit chiusura elica

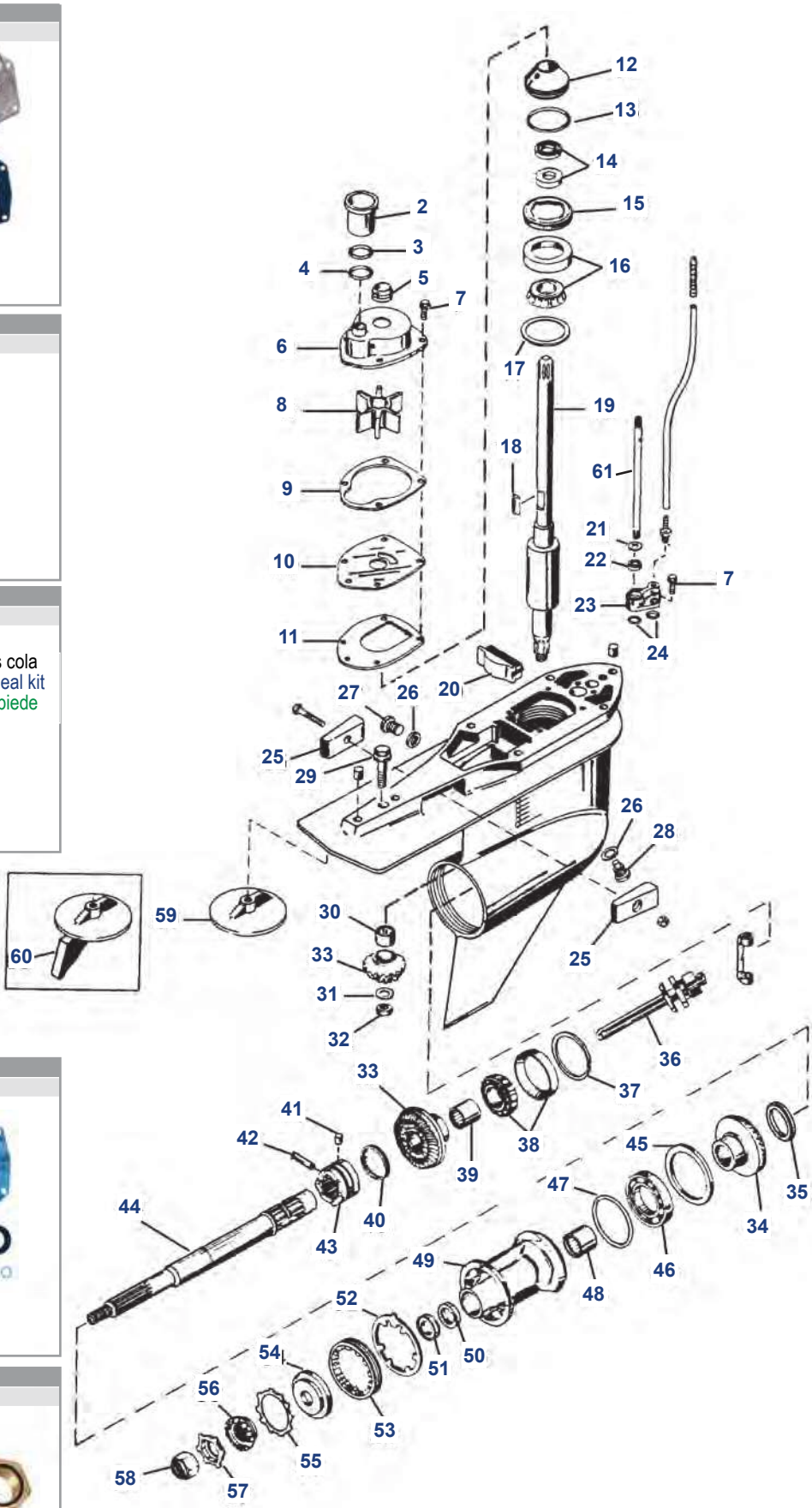

Nº	Ref.	R.O./OEM	Descripción	Description	Descrizione
2		832942A1	TUBO AGUA	COUPLING ASSY.	TUBO ACQUA
3	**REC25-35027**	25-35027	ARO TÓRICO	O-RING	O-RING
4	**REC25-21836**	25-21836	ARO TÓRICO	O-RING	O-RING
5	**REC26-816575A2**	26-816575A2	RETÉN GOMA	FACE SEAL	TENUTA GOMMA
6	**RM817275A1**	817275A1	TAPA BOMBA	WATER PUMP ASSY.	COPERCHIO POMPA
7	**REC10-816928**	10-19937-16	TORNILLO	SCREW	VITE
8	**REC47-43026Q02**	47-43026T2	IMPULSOR	IMPELLER	GIRANTE
9	**REC27-8172771**	27-817277-1	JUNTA	GASKET	GUARNIZIONE
10	**REC8172761**	817276-1	TAPA BOMBA	WEAR PLATE	COPERCHIO POMPA
11	**REC27-430331**	27-43033-1	JUNTA	GASKET	GUARNIZIONE
12	**REC807929A1**	807929A1	BASE BOMBA	CARRIER ASSY.	BASE POMPA
13	**REC25-90011**	25-90011	ARO TÓRICO	O-RING	O-RING
14	**REC26-66302**	26-66302	RETÉN	OIL SEAL	PARAOLIO
15	**REC8245191**	824519-1	RETENEDOR	RETAINER	RITENETORE
16	**REC31-36387A1**	31-36387A1	COJINETE	BEARING	CUSCINETTO
17	**REC15-42637A1**	15-42637A1	SUPLEMENTO	SHIM	SPESSORE
18	**REC28-8M0032833**	28-43037	CHAVETA	KEY	CHIAVETTA
19	**REC45-816919**	45-816472	EJE TRANMISIÓN	DRIVE SHAFT	ASSE TRASMISSIONE
20	**REC821526001**	821526	TAPÓN SEPARADOR	FILLER BLOCK	TAPPO
21	**REC12-77674**	12-77674	JUNTA	GASKET	GUARNIZIONE
22	**REC26-8164641**	26-816464-1	RETÉN	OIL SEAL	PARAOLIO
23	**REC23-815921A21**	23-815921A4	CUERPO VARILLA	SHIFT BUSHING	CORPO ASTICELLA
24	**REC25-36318**	25-36318	ARO TORICO	O-RING	O-RING
25	**CM826134**	826134Q	ÁNODO ZINC	ANODE ZINC	ANODO ZINCO
25	**CM826134A**	826134Q	ÁNODO ALUMINIO	ANODE ALUMINUM	ANODO ALLUMINIO
26	**REC12-191833**	12-19183-2	JUNTA	GASKET	GUARNIZIONE
27	**REC10-79953Q04**	10-79953Q2	TORNILLO	SCREW SET	VITE
28	**REC22-67892A05**	22-67892A1	TORNILLO DRENAJE	DRAINING SCREW	VITE DRENAGGIO
29	**REC10-806327**	10-806327	TORNILLO	SCREW	VITE
30	**REC387817**	31-42647A1	COJINETE	BEARING	CUSCINETTO
31	**REC350038**	12-92721	ARANDELA	WASHER	RONDELLA
32	**REC11-35921**	11-35921	TUERCA	NUT	DADO
33	**REC43-859321A3**	43-859321A3	KIT PIÑONES ATAQUE (1.75:1)	P/FORWARD GEAR (1.75:1)	KIT PIGNONI AVANTI (1.75:1)
33		43-828072A2	KIT PIÑONES ATAQUE (1.62:1)	P/FORWARD GEAR (1.62:1)	KIT PIGNONI AVANTI (1.62:1)
34		43-859322A1	KIT PIÑONES M. ATRÁS (1.75:1)	REVERSE GEAR (1.75:1)	KIT PIGNONI INDIETRO (1.75:1)
34	**REC43-828073A1**	43-828073A1	KIT PIÑONES M. ATRÁS (1.62:1)	REVERSE GEAR (1.62:1)	KIT PIGNONI INDIETRO (1.62:1)
35	**REC23-824108**	23-824108	ESPACIADOR	THRUST SPACER	DISTANZIAELE
36	**REC818349T1**	818349T1	EJE CAMBIO	SHIFT SPOOL	ASSE CAMBIO
37	**REC15-47397A1**	15-47397A1	SUPLEMENTO	SHIM (3.500 O.D.)	SPESSORE
37	**REC15-44491A1**	15-44491A1	SUPLEMENTO	SHIM (3.265 O.S.)	SPESSORE
38	**REC31-35928T1**	31-35928A1/T1	COJINETE	BEARING (1.875 I.D./3.500 O.D.)	CUSCINETTO
38	**REC31-828439A2**	31-828439A2	COJINETE	BEARING (1.875 I.D./3.265 O.D.)	CUSCINETTO
38	**REC31-30894A1**	31-30894A1	COJINETE	BEARING (1.750 I.D./3.265 O.D.)	CUSCINETTO
39	**REC31-30895T**	31-30895T	COJINETE	BEARING	CUSCINETTO
40	**REC24-30893**	24-30893	MUELLE	SPRING	MOLLA
41	**REC17-828356**	17-828356	TAPA PASADOR	DETENT PIN	CHIAVETTA
42	**REC17-8M0084681**	17-30632	PASADOR	CROSS PIN	CHIAVETTA
43	**REC52-853594T**	52-853594T	SELECTOR	CLUTCH DOG	SELETTORE
43	**REC52-859340T**	52-859340T	SELECTOR	CLUTCH DOG	SELETTORE
44	**REC44-824110**	44-824110	EJE HÉLICE	PROP SHAFT	ASSE ELICA
45	**REC681001**	68100-1	ARO	THRUST RING	O-RING
46	**REC30-88957T**	30-88957T	COJINETE	BEARING	CUSCINETTO
47	**REC25-31534**	25-31534	ARO TÓRICO	O-RING	O-RING
48	**REC387247**	30-30956	COJINETE	BEARING	CUSCINETTO
49	**REC818763A10**	818763A11/T11	COJINETE COLA	BEARING CARRIER	CUSCINETTO PIEDE
50	**REC26-76868**	26-14077, 26-76868	RETÉN	OIL SEAL	PARAOLIO
51	**REC26-12224**	26-12224	RETÉN	OIL SEAL	PARAOLIO
52	**REC14-18323**	14-18323	ARANDELA	TAB WASHER	RONDELLA
53	**REC8M2011027**	79448	TUERCA CIERRE	COVER NUT	DADO CHIUSURA
54	**REC12-31211Q01**	12-835467	TOPE HÉLICE	THRUST WASHER	PUNTA ELICA
55	**REC13-423511**	13-42351-1	CIERRE	LOCKWASHER	CHIUSURA
56	**REC12-31211Q03**	12-31211A3	TOPE CIERRE	TAB WASHER RECEIVER	PUNTA CHIUSURA
57	**REC90508-ZW1-003**	14-816629	CIERRE HELICE	TAB WASHER	CHIUSURA ELICA
58	**REC11-52707Q1**	11-827614Q	TUERCA CIERRE	LOCK NUT	DADO CHIUSURA
59	**CM762145**	76214Q5	ÁNODO	ANODE	ANODO
59	**CM762145A**	76214Q5	ÁNODO ALUMINIO	ANODE ALUMINUM	ANODO ALLUMINIO
60	**CM31640**	31640Q4	ÁNODO	ANODE	ANODO
60	**CM31640A**	31640Q4	ÁNODO ALUMINIO	ANODE ALUMINUM	ANODO ALLUMINIO
61	**REC824145**	824145	EJE CAMBIO	SHIFT SHAFT	ASSE CAMBIO

KITS PIÑONES
GEAR SETS
KITS PIGNONI

MODELO MODEL MODELLO	SERIE SERIAL SERIE	REDUCCIÓN RATIO RIDUZIONE	DIENTES JAW DENTI	KIT COMPLETO COMPLETE GEAR SET KIT COMPLETO		KIT PIÑONES ATAQUE PINION & FORWARD GEAR SET KIT PIGNONE ATTACCO		PIÑONES MARCHA ATRÁS REVERSE GEAR PIGNONE MARCIA INDIETRA	
				REF	R.O. OEM	REF	R.O. OEM	REF	R.O. OEM
40 - 50 HP (3 Cyl.)	9973100 +	1.83:1 (12:22)				**REC43-803498T1**	43-803498T1	**REC43-822163T1**	43-8822163T1
50 HP (3 Cyl.)	9683055 - 9973099	1.64:1 (14:23)				**REC43-803499T1**	43-803499T1		43-813695T
55 HP (3 Cyl.)	9741042 +								
60 HP (3 Cyl.)	9683055 +								
L4 100 HP (1.85L)	9523034 +	2.07:1 (14:29) Selector / Cluth / Selettore **REC52-850048T**	6	**REC11557**			43-803028T1 43-881260A5		43-850036T
L4 115 HP (1.85L) 115 EFI (1.75L) 115 Optimax (1.50L)	955971 +								
L4 125 HP (1.85L) Classic	9793577+								
V6 200, 225 (3.0 L DFI) (1998+)	OG590000+	1.75:1 (12:21)				**REC43-859321A3**	43-859321A3		43-8859322A1
V6 225, 250 (3.0 L EFI) (1995+)	OG129222+								
V6 225 Seapro (3.0 L Carb) (1994-98)	OG245605 - OG437999	1.62:1 (13:21)	6			**REC43-878087A2**	43-878087A2	**REC43-828073A1**	43-828073A1
V6 225 (3.0 L Carb) (1994-98)	OD280813+								
V6 150 HP (1985)	6616991 - OA904645	2.0 (14:28)		**REC11770**			43-803619T1		43-85462T
V6 175 HP (1980-81)	5393737 - 668750								
V6 200 HP (1980-81)	5393737 - 607319								
V6 150 HP (XR4, MAG III) 150 EFI (1993-98)	OD082000 - OG437999	1.87:1 (15:28)		**REC43-44104T2**	43-44104T2		43-44104A8		43-824986A2
V6 175, 175 EFI (1985-98)	661875 - OG437999								
V6 200, 200 EFI (1985-98)	6625221 - OG437999								
V6 220 HP (1987-88)	B117319 +								
V6 225 HP	06437999	1.62 (13:21)			43-828072A2		43-828072A2		43-828073A1
V6- 3.0 L Carb									
V6 225 Marathon									
V6 225 Seapro									

GUÍA PIÑONES
PINIONS APPLICATION
GUIDA PIGNONE

HP	Cyl.	AÑO YEAR ANNO	PAÍS COUNTRY PAESE	SERIE SERIAL SERIE	KIT COMPLETO COMPLET GEAR SET KIT COMPLETO	PIÑÓN ATAQUE FORWARD & PINION PIGNONE AVVANTI	MARCHA ATRÁS REVERSE GEAR MARCIA INDIETRA	MARCHA ADELANTE FORWARD BEARING MARCIA AVVANTI
40	4	1989+	USA	0C159200 +				**REC31-38356A1**
40	4	1989+	BEL	9570790 +				**REC31-38356A1**
45	4	1986	USA	5531630 +				**REC31-38356A1**
45	4	1986	AUS	8063985 +				**REC31-38356A1**
45	4	1986	BEL	9248006 +				**REC31-38356A1**
45	4	1986	CAN	7143688 +				**REC31-38356A1**
50	4	1980-85	USA	5531630 +				**REC31-38356A1**
50	4	1980-85	AUS	8063985 +				**REC31-38356A1**
50	4	1980-85	BEL	9248006 +				**REC31-38356A1**
50	4	1980-85	CAN	7143688 +				**REC31-38356A1**
40	3	1997-98	USA	0G531301 +		**REC43-803498T1**	**REC43-822163T1**	**REC31-66668A1**
40	3	1997-98	BEL	9973100 +		**REC43-803498T1**	**REC43-822163T1**	**REC31-66668A1**
50	3	1991-95	USA	0D000750 - 0G589999		**REC43-803499T1**		**REC983892**
50	3	1991-95	BEL	9683055 - 9973099		**REC43-803499T1**		**REC983892**
50	3	1998	USA	0G590000 +		**REC43-803498T1**	**REC43-822163T1**	**REC31-66668A1**
50	3	1998	BEL	9973100 +		**REC43-803498T1**	**REC43-822163T1**	**REC31-66668A1**
55	3	1996	USA	0D000750 +		**REC43-803499T1**		**REC983892**
55	3	1996	BEL	9741042 +		**REC43-803499T1**		**REC983892**
60 Standard, Non-Bigfoot	3	1991-95	USA	0D000750 +		**REC43-803499T1**		**REC983892**
60 Standard, Non-Bigfoot	3	1991-95	BEL	9683055 +		**REC43-803499T1**		**REC983892**
60 3 Jaw Rev. Clutch Bigfoot	3	1991-95	USA	0D000750 - 0G589999				**REC31-30894A1**
60 3 Jaw Rev. Clutch Bigfoot	3	1991-95	BEL	9683055-9973099				**REC31-30894A1**
60 6 Jaw Rev. Clutch Bigfoot	3	1991-95	USA	0D000750 - 0G589999				**REC31-30894A1**
60 6 Jaw Rev. Clutch Bigfoot	3	1991-95	BEL	9683055 - 9973099				**REC31-30894A1**
60 6 Jaw Rev. Clutch Bigfoot	3	1998	USA	590000 +				**REC31-30894A1**
60 6 Jaw Rev. Clutch Bigfoot	3	1998	BEL	9973100 +				**REC31-30894A1**
70 3 Jaw Rev. Clutch	3	1987	USA	0A996142 - 0C221999				**REC31-30894A1**
70 3 Jaw Rev. Clutch	3	1987	BEL	9483121 - 9589038				**REC31-30894A1**
70 6 Jaw Rev. Clutch	3	1987	USA	0A996142 - 0C221999				**REC31-30894A1**
70 6 Jaw Rev. Clutch	3	1987	BEL	9483121 - 9589038				**REC31-30894A1**

HP	Cyl.	AÑO YEAR ANNO	PAÍS COUNTRY PAESE	SERIE SERIAL SERIE	KIT COMPLETO COMPLET GEAR SET KIT COMPLETO	PIÑÓN ATAQUE FORWARD & PINION PIGNONE AVVANTI	MARCHA ATRÁS REVERSE GEAR MARCIA INDIETRA	MARCHA ADELANTE FORWARD BEARING MARCIA AVVANTI
75 3 Jaw Rev. Clutch	3	1990-93	USA	0A996142 +				REC31-30894A1
75 3 Jaw Rev. Clutch	3	1990-93	BEL	9483121 +				REC31-30894A1
75 6 Jaw Rev. Clutch	3	1994-98	USA	0A996142 +				REC31-30894A1
75 6 Jaw Rev. Clutch	3	1994-98	BEL	9483121 +				REC31-30894A1
80 3 Jaw Rev. Clutch	3	1987	USA	0A996142 - 0C221999				REC31-30894A1
80 3 Jaw Rev. Clutch	3	1987	BEL	9483121 - 9589038				REC31-30894A1
80 6 Jaw Rev. Clutch	3	1987	USA	0A996142 - 0C221999				REC31-30894A1
80 6 Jaw Rev. Clutch	3	1987	BEL	9483121 - 9589038				REC31-30894A1
90 3 Jaw Rev. Clutch	3	1987	USA	0A996142 +				REC31-30894A1
90 3 Jaw Rev. Clutch	3	1987	BEL	9483121 +				REC31-30894A1
90 6 Jaw Rev. Clutch	3	1987	USA	0A996142 +				REC31-30894A1
90 6 Jaw Rev. Clutch	3	1987	BEL	9483121 +				REC31-30894A1
100 3 Jaw Rev. Clutch	4	1988-93	USA	0B209468 +				REC31-30894A1
100 3 Jaw Rev. Clutch	4	1988-93	BEL	9523034 +				REC31-30894A1
100 High Altitude 3 Jaw Rev. Clutch		1988-93	USA	0B209468 +				REC31-30894A1
100 High Altitude 3 Jaw Rev. Clutch		1988-93	BEL	9523034 +				REC31-30894A1
100 6 Jaw Rev. Clutch	4	1988-98	USA	0B209468 +	REC11557			REC31-30894A1
100 6 Jaw Rev. Clutch	4	1988-98	BEL	9523034 +	REC11557			REC31-30894A1
100 High Altitude 6 Jaw Rev. Clutch		1988-93	USA	0B209468 +				REC31-30894A1
100 High Altitude 6 Jaw Rev. Clutch		1988-93	BEL	9523034 +				REC31-30894A1
115 3 Jaw Rev. Clutch	4	1988-93	USA	0C100000 +				REC31-30894A1
115 3 Jaw Rev. Clutch	4	1988-93	BEL	9559771 +				REC31-30894A1
115 High Altitude 3 Jaw Rev. Clutch		1989-93	USA	0C100000 +				REC31-30894A1
115 High Altitude 3 Jaw Rev. Clutch		1989-93	BEL	9559771 +				REC31-30894A1
115 6 Jaw Rev. Clutch	4	1989-93	USA	0C100000 +	REC11557			REC31-30894A1
115 6 Jaw Rev. Clutch	4	1989-93	BEL	9559771 +	REC11557			REC31-30894A1
115 High Altitude 6 Jaw Rev. Clutch		1989-93	USA	0C100000 +				REC31-30894A1
115 High Altitude 6 Jaw Rev. Clutch		1989-93	BEL	9559771 +				REC31-30894A1
125 3 Jaw Rev. Clutch	4	1994-98	USA	0D283222 +				REC31-30894A1
125 3 Jaw Rev. Clutch	4	1994-98	BEL	9793577 +				REC31-30894A1
125 High Altitude 3 Jaw Rev. Clutch		1994-98	USA	0D283222 +				REC31-30894A1
125 High Altitude 3 Jaw Rev. Clutch		1994-98	BEL	9793577 +				REC31-30894A1
125 6 Jaw Rev. Clutch	4	1994-98	USA	0D283222 +	REC11557			REC31-30894A1
125 6 Jaw Rev. Clutch	4	1994-98	BEL	9793577 +	REC11557			REC31-30894A1
125 High Altitude 6 Jaw Rev. Clutch		1994-98	USA	0D283222 +				REC31-30894A1
125 High Altitude 6 Jaw Rev. Clutch		1994-98	BEL	9793577 +				REC31-30894A1
V-135 Std. Rotation, 2:1 Ratio,		1986-88	USA	0A904646 - 0G437999				REC31-78172A1
V-135 Counter Rotation,		1989-90	USA	0C100861 - 0G437999				REC31-78172A1
V-135 Std. Rotation, 2:1 Ratio,		1997-04	USA	0G438000 +				REC31-30894A1
V-135 Counter Rotation,		1997-04	USA	0G438000 +				REC31-30894A1
V-135 DFI Std. Rotation, 2:1,		1998-04	USA	0G590000 +				REC31-30894A1
V-150 Std. Rotation, 2:1 Ratio,		1986-88	USA	0A904646 - 0G437999				REC31-78172A1
V-150 Counter Rotation, 2:1,		1989-90	USA	0C100861 - 0G437999				REC31-30894A1
V-150 (XR4, MAG II) Torpedo		1988-91	USA	0C239553 - 04303045				REC31-78172A1
V-150 (XR4, MAG III) Torpedo		1988-91	USA	0D082000 - 0G437999	REC43-44104T2			REC31-78172A1
V-150 EFI Std. Rotation, 1.87:1,		1993-95	USA	0D082000 - 0G437999	REC43-44104T2			REC31-78172A1
V-150 Std. Rotation, 2:1,		1996-98	USA	0G438000 +				REC31-30894A1
V-150 (XR6, MAG III) Std. Rot., 1.87:1,		1996-98	USA	0G438000 +				REC31-30894A1
V-150 EFI Std. Rot., 1.87:1,		1996-98	USA	0G438000 +				REC31-30894A1
V-150 DFI Std. Rot., 1.87:1,		1998	USA	0G590000 +				REC31-30894A1
V-175 Std. Rot		1980-81	USA	5393737 - 6618750	REC11770			REC31-78172A1
V-175 Std. Rot.,		1980-81	AUS	8064250 +	REC11770			REC31-78172A1
V-175 Std. Rot., 1.87:1 Ratio,		1985-88	USA	6618751 - 0G437999	REC43-44104T2			REC31-78172A1
V-175 Counter Rot., 1.87:1 Ratio,		1985-88	USA	6618751 - 0G437999				REC31-78172A1
V-175 EFI Std. Rot., 1.87:1,		1991	USA	0D000750 - 0G437999	REC43-44104T2			REC31-78172A1
V-175 EFI Counter Rot., 1.87:1,		1991	USA	0D082000 - 0G437999				REC31-78172A1
V-175 Std. Rot., 1.87:1,		1996-98	USA	0G438000 +				REC31-30894A1
V-175 Counter Rot., 1.87:1,		1996-98	USA	0G438000 +				REC31-30894A1
V-175 EFI Std. Rot., 1.87:1,		1996-98	USA	0G438000 +				REC31-30894A1
V-175 Counter Rot., 1.87:1,		1996-98	USA	0G438000 +				REC31-30894A1
V-200 Std. Rot.		1978-79	USA	5393737 - 6073191	REC11770			REC31-78172A1
V-200 Std. Rot.		1980-81	AUS	8061595 - 8065672	REC11770			REC31-78172A1
V-200 Std. Rot.		1982-84	USA	6073192 - 6625220				REC31-78172A1
V-200 Std. Rot., 1.87:1,		1985-88	USA	6625221 - 0C291519	REC43-44104T2			REC31-78172A1
V-200 Std. Rot., 1.87:1,		1991	USA	0C291520 - 0G437999	REC43-44104T2			REC31-78172A1
V-200 EFI Std. Rot., 1.87:1,		1989-90	USA	0C100861 - 0C291519	REC43-44104T2			REC31-78172A1
V-200 EFI Std. Rot., 1.87:1,		1991	USA	0C291520 - 0G437999	REC43-44104T2			REC31-78172A1
V-200 EFI Counter Rot., 1.87:1,		1992-95	USA	0D082000 - 0G437999				REC31-78172A1
V-200 DFI Std. Rot., 1.87:1,		1997-04	USA	0G437999				REC31-35928T1
V-200 DFI Std. Rot., 1.75:1,		1997	USA	0G438000 +		REC43-859321A3		REC31-30894A1

HP	Cyl.	AÑO YEAR ANNO	PAÍS COUNTRY PAESE	SERIE SERIAL SERIE	KIT COMPLETO COMPLET GEAR SET KIT COMPLETO	PIÑÓN ATAQUE FORWARD & PINION PIGNONE AVVANTI	MARCHA ATRÁS REVERSE GEAR MARCIA INDIETRA	MARCHA ADELANTE FORWARD BEARING MARCIA AVVANTI
V-200 DFI Counter Rot., 1.75:1,		1997	USA	0G386496 - 0G437999				**REC31-35928T1**
V-200 Std. Rot., 1.87:1,		1996-98	USA	0G438000 +				**REC31-30894A1**
V-200 Counter Rot., 1.87:1,		1996-98	USA	0G438000 +				**REC31-30894A1**
V-200 EFI Std. Rot., 1.87:1,		1996-98	USA	0G438000 +				**REC31-30894A1**
V-200 Counter Rot., 1.87:1,		1996-98	USA	0G438000 +				**REC31-30894A1**
V-200 DFI Counter Rot., 1.75:1,		1997	USA	0G438000 +				**REC31-30894A1**
200 (3.0L) DFI Std. Rot., 1.75:1 Ratio		1998	USA	0G590000 +		**REC43-859321A3**		**REC31-30894A1**
200 (3.0L) Std. Rot., 1.75:1 Ratio		1998	USA	0G590000 +		**REC43-859321A3**		**REC31-30894A1**
225 (3.0L) DFI Std. Rot., 1.75:1 Ratio		1998	USA	0G590000 +		**REC43-859321A3**		**REC31-30894A1**
225 (3.0 Carb) Sea Pro , 1.62:1		1994-98	USA	- 0G437999			**REC43-828073A1**	**REC31-35928T1/ REC31-828439A2**
225 (3.0 Carb) Sea Pro , 1.75:1		1994-98	USA	- 0G437999				**REC31-35928T1/ REC31-828439A2**
V-220 Std. Rot., 1.87:1 Ratio		1987-88	USA	B117316 +	**REC43-44104T2**			**REC31-78172A1**
V-225 Std. Rot.,		1980-81	USA	5628028 +				**REC31-78172A1**
225 (3.0 Carb) Std. Rot., 1.62:1 Ratio		1994-98	USA	0D280813 +			**REC43-828073A1**	**REC31-35928T1/ REC31-828439A2**
225 (3.0L) EFI Std. Rot., 1.75:1 Ratio		1995-98	USA	0G129222-0G437999				**REC31-30894A1**
225 (3.0L) EFI Std. Rot., 1.75:1 Ratio		1995-98	USA	0G438000 +		**REC43-859321A3**		**REC31-30894A1**
225 (3.0L) EFI Std. Rot., 1.87:1 Ratio		1995-98	USA	0G438000 +				**REC31-30894A1**
250 (3.0L) EFI Std. Rot., 1.75:1 Ratio		1995-98	USA	0G129222-0G437999		**REC43-859321A3**		**REC31-30894A1**
250 (3.0L) EFI Std. Rot., 1.75:1 Ratio		1995-98	USA	0G438000 +		**REC43-859321A3**		**REC31-30894A1**
250 (3.0L) EFI Std. Rot., 1.87:1 Ratio		1995-98	USA	0G438000 +				**REC31-30894A1**
250 / 275 Std. Rotation		1989-94	USA	C101891 +				**REC31-35928T1**

TUERCA DE PIÑÓN
PINION NUTS
DADI PIGNONI

Ref.	R.O.
REC11-35921	11-35921
REC313339	11-55910

Ref.	R.O.
REC6E5-45631-00	52-96313M

4A (6E0)
5C (6E3)

Ref.	R.O.
REC664-45631-00	52-81644T

20C (Thru Propex)
25C/K (Thru Propex)
28
30a / w30cw/Marathon

Ref.	R.O.
REC682-45631-00	52-84274M

9.9C
15C/K/ (long)
W15

SELECTORES
CLUTCH DOGS
SELETTORI

Ref.	R.O.	Dientes contrarotación Jaw Reverse Denti Controrotanti
REC52-853594T	52-853594T	6
REC52-822539T	52-822539T	3
REC52-850048T	52-850048T	6
REC52-859340T	52-859340T	6

REC52-853594T

REC52-822539T

REC52-850048T

REC52-859340T

4 TIEMPOS STROKES
GUÍA SELECTORES
CLUTCH DOGS APPLICATION
GUIDA SELETTORI

MODELO MODEL MODELLO	Cyl.	SERIE SERIAL SERIE	REDUCCIÓN 2.31:1 RATIO 2.31:1 RIDUZIONI 2.31:1	REDUCCIÓN 2.33:1 RATIO 2.33:1 RIDUZIONI 2.33:1
30		0P017000-0P153499	**REC52-850048T**	
30 Carb	3	0P153500-0P400999	**REC52-850048T**	**REC52-850048T**
40		9944807-0P153499	**REC52-850048T**	
40	4	0P094500-0P206999	**REC52-850048T**	
50		0P017000 +	**REC52-850048T**	
50	4	0P094500 +	**REC52-850048T**	
50 EFI	4	0P153500 +	**REC52-850048T**	**REC52-850048T**
60	4	0P094500-0P206999	**REC52-850048T**	
60 EFI	4	0P153500-0P515896		**REC52-850048T**

2 STROKES TIEMPOS

GUÍA SELECTORES
CLUTCH DOGS APPLICATION
GUIDA SELETTORI

MODELO MODEL MODELLO	Cyl.	AÑO YEAR ANNO	PAÍS COUNTRY PAESE	SERIE SERIAL SERIE	SELECTOR CLUTCH DOG SELETTORE
50	3	1991-95	USA	0D000750-0G589999	**REC52-850048T**
50	3	1991-95	BEL	9683055-9973099	**REC52-850048T**
55	3	1996	USA	0D000750 +	**REC52-850048T**
55	3	1996	BEL	9741042 +	**REC52-850048T**
60 Standard, Non Bigfoot	3	1991-95	USA	0D000750 +	**REC52-850048T**
60 Standard, Non Bigfoot	3	1991-95	BEL	9683055 +	**REC52-850048T**
60 3 Jaw Rev. Clutch Bigfoot	3	1991-95	USA	0D000750-0G589999	**REC52-822539T**
60 3 Jaw Rev. Clutch Bigfoot	3	1991-95	BEL	9683055-9973099	**REC52-822539T**
60 6 Jaw Rev. Clutch Bigfoot	3	1991-95	USA	0D000750-0G589999	**REC52-850048T**
60 6 Jaw Rev. Clutch Bigfoot	3	1991-95	BEL	9683055-9973099	**REC52-850048T**
60 6 Jaw Rev. Clutch Bigfoot	3	1998	USA	590000 +	**REC52-850048T**
60 6 Jaw Rev. Clutch Bigfoot	3	1998	BEL	9973100 +	**REC52-850048T**
70 3 Jaw Rev. Clutch	3	1987	USA	0A996142-0C221999	**REC52-822539T**
70 3 Jaw Rev. Clutch	3	1987	BEL	9483121-9589038	**REC52-822539T**
70 6 Jaw Rev. Clutch	3	1987	USA	0A996142-0C221999	**REC52-850048T**
70 6 Jaw Rev. Clutch	3	1987	BEL	9483121-9589038	**REC52-850048T**
75 3 Jaw Rev. Clutch	3	1990-93	USA	0A996142 +	**REC52-822539T**
75 3 Jaw Rev. Clutch	3	1990-93	BEL	9483121 +	**REC52-822539T**
75 6 Jaw Rev. Clutch	3	1994-98	USA	0A996142 +	**REC52-850048T**
75 6 Jaw Rev. Clutch	3	1994-98	BEL	9483121 +	**REC52-850048T**
80 3 Jaw Rev. Clutch	3	1987	USA	0A996142-0C221999	**REC52-822539T**
80 3 Jaw Rev. Clutch	3	1987	BEL	9483121-9589038	**REC52-822539T**
80 6 Jaw Rev. Clutch	3	1987	USA	0A996142-0C221999	**REC52-850048T**
80 6 Jaw Rev. Clutch	3	1987	BEL	9483121-9589038	**REC52-850048T**
90 3 Jaw Rev. Clutch	3	1987	USA	0A996142 +	**REC52-822539T**
90 3 Jaw Rev. Clutch	3	1987	BEL	9483121 +	**REC52-822539T**
90 6 Jaw Rev. Clutch	3	1987	USA	0A996142 +	**REC52-850048T**
90 6 Jaw Rev. Clutch		1987	BEL	9483121 +	**REC52-850048T**
100 3 Jaw Rev. Clutch		1988-93	USA	0B209468 +	**REC52-822539T**
100 3 Jaw Rev. Clutch		1988-93	BEL	9523034 +	**REC52-822539T**
100 High Altitude 3 Jaw Rev. Clutch		1988-93	USA	0B209468 +	**REC52-822539T**
100 High Altitude 3 Jaw Rev. Clutch		1988-93	BEL	9523034 +	**REC52-822539T**
100 6 Jaw Rev. Clutch		1988-98	USA	0B209468 +	**REC52-850048T**
100 6 Jaw Rev. Clutch		1988-98	BEL	9523034 +	**REC52-850048T**
100 High Altitude 6 Jaw Rev. Clutch		1988-93	USA	0B209468 +	**REC52-850048T**
100 High Altitude 6 Jaw Rev. Clutch		1988-93	BEL	9523034 +	**REC52-850048T**
115 3 Jaw Rev. Clutch		1988-93	USA	0C100000 +	**REC52-822539T**
115 3 Jaw Rev. Clutch		1988-93	BEL	9559771 +	**REC52-822539T**
115 High Altitude 3 Jaw Rev. Clutch		1989-93	USA	0C100000 +	**REC52-822539T**
115 High Altitude 3 Jaw Rev. Clutch		1989-93	BEL	9559771 +	**REC52-822539T**
115 6 Jaw Rev. Clutch		1989-93	USA	0C100000 +	**REC52-850048T**
115 6 Jaw Rev. Clutch		1989-93	BEL	9559771 +	**REC52-850048T**
115 High Altitude 6 Jaw Rev. Clutch		1989-93	USA	0C100000 +	**REC52-850048T**
115 High Altitude 6 Jaw Rev. Clutch		1989-93	BEL	9559771 +	**REC52-850048T**
125 3 Jaw Rev. Clutch		1994-98	USA	0D283222 +	**REC52-822539T**
125 3 Jaw Rev. Clutch		1994-98	BEL	9793577 +	**REC52-822539T**
125 High Altitude 3 Jaw Rev. Clutch		1994-98	USA	0D283222 +	**REC52-822539T**
125 High Altitude 3 Jaw Rev. Clutch		1994-98	BEL	9793577 +	**REC52-822539T**
125 6 Jaw Rev. Clutch		1994-98	USA	0D283222 +	**REC52-850048T**
125 6 Jaw Rev. Clutch		1994-98	BEL	9793577 +	**REC52-850048T**
125 High Altitude 6 Jaw Rev. Clutch		1994-98	USA	0D283222 +	**REC52-850048T**
125 High Altitude 6 Jaw Rev. Clutch		1994-98	BEL	9793577 +	**REC52-850048T**
V-135 Std. Rotation, 2:1 Ratio, Non-Ratching		1997-04	USA	0G438000 +	**REC52-859340T**
V-135 Counter Rotation, Non-Ratching		1997-04	USA	0G438000 +	**REC52-859340T**
V-135 DFI Std. Rotation, 2:1, Non-Ratching		1998-04	USA	0G590000 +	**REC52-859340T**
V-135 DFI Counter Rotation, Non-Ratching		1998-04	USA	0G590000 +	**REC52-859340T**
V-150 (XR4, MAG II) w/ 4-1/4 Dia. Torpedo		1988-91	USA	0C239553-04303045	**REC52-822539T**
V-150 Std. Rotation, 2:1, Non-Ratching		1996-98	USA	0G438000 +	**REC52-859340T**
V-150 Counter Rotation, Non-Ratching		1996-98	USA	0G438000 +	**REC52-859340T**
V-150 (XR6, MAG III) Std. Rot., 1.87:1, Non-Ratching		1996-98	USA	0G438000 +	**REC52-859340T**
V-150 EFI Std. Rot., 1.87:1, Non-Ratching		1996-98	USA	0G438000 +	**REC52-859340T**
V-150 EFI Counter Rot., 1.87:1, Non-Ratching		1996-98	USA	0G438000 +	**REC52-859340T**
V-150 DFI Std. Rot., 1.87:1, Non-Ratching		1998	USA	0G590000 +	**REC52-859340T**
V-150 DFI Counter Rot., 1.87:1, Non-Ratching		1998	USA	0G590000 +	**REC52-859340T**
V-175 Counter Rot., 1.87:1, Non-Ratching		1996-98	USA	0G438000 +	**REC52-859340T**
V-175 EFI Std. Rot., 1.87:1, Non-Ratching		1996-98	USA	0G438000 +	**REC52-859340T**
V-175 Counter Rot., 1.87:1, Non-Ratching		1996-98	USA	0G438000 +	**REC52-859340T**
V-200 DFI Std. Rot., 1.75:1, Non-Ratching		1997	USA	0G438000 +	**REC52-859340T**
V-200 DFI Counter Rot., 1.75:1, Ratching		1997	USA	0G386496-0G437999	
V-200 Std. Rot., 1.87:1, Non-Ratching		1996-98	USA	0G438000 +	**REC52-859340T**
V-200 Counter Rot., 1.87:1, Non-Ratching		1996-98	USA	0G438000 +	**REC52-859340T**

MODELO MODEL MODELLO	Cyl.	AÑO YEAR ANNO	PAÍS COUNTRY PAESE	SERIE SERIAL SERIE	SELECTOR CLUTCH DOG SELETTORE
V-200 EFI Std. Rot., 1.87:1, Non-Ratching		1996-98	USA	0G438000 +	**REC52-859340T**
V-200 Counter Rot., 1.87:1, Non-Ratching		1996-98	USA	0G438000 +	**REC52-859340T**
V-200 DFI Counter Rot., 1.75:1, Non-Ratching		1997	USA	0G438000 +	**REC52-859340T**
200 (3.0L) DFI Std. Rot., 1.75:1 Ratio		1998	USA	0G590000 +	**REC52-853594T**
200 (3.0L) Std. Rot., 1.75:1 Ratio		1998	USA	0G590000 +	**REC52-853594T**
225 (3.0L) DFI Std. Rot., 1.75:1 Ratio		1998	USA	0G590000 +	**REC52-853594T**
225 (3.0 Carb) Sea Pro Std. Rot., 1.62:1		1994-98	USA	- 0G437999	**REC52-853594T**
225 (3.0 Carb) Sea Pro Std. Rot., 1.75:1		1994-98	USA	- 0G437999	**REC52-853594T**
V-220 Std. Rot., 1.87:1 Ratio		1987-88	USA	B117316 +	**REC52-853594T**
V-225 Std. Rot., w/ pre-load pin in drive shaft		1980-81	USA	5628028 +	**REC52-853594T**
225 (3.0 Carb) Std. Rot., 1.62:1 Ratio		1994-98	USA	0D280813 +	**REC52-853594T**
225 (3.0L) EFI Std. Rot., 1.75:1 Ratio		1995-98	USA	0G129222-0G437999	**REC52-853594T**
225 (3.0L) EFI Std. Rot., 1.75:1 Ratio		1995-98	USA	0G438000 +	**REC52-853594T**
225 (3.0L) EFI Std. Rot., 1.87:1 Ratio		1995-98	USA	0G438000 +	**REC52-853594T**
250 (3.0L) EFI Std. Rot., 1.75:1 Ratio		1995-98	USA	0G129222-0G437999	**REC52-853594T**
250 (3.0L) EFI Std. Rot., 1.75:1 Ratio		1995-98	USA	0G438000 +	**REC52-853594T**
250 (3.0L) EFI Std. Rot., 1.87:1 Ratio		1995-98	USA	0G438000 +	**REC52-853594T**
250 / 275 Std. Rotation		1989-94	USA	C101891 +	**REC52-853594T**

EJES HÉLICE
PROP SHAFTS
ASSE ELICHE

REF	RO. OEM	HP	DESCRIPCIÓN DESCRIPTION DESCRIZIONE	LONGITUD LENGTH LUNGHEZZA	Ø CAÑA CARRIER NEEDLE BEARING JOURNAL Ø Ø GAMBO	ESTRIAS SPLINES DENTI	TOPE HÉLICE PROP THRUST WASHER PUNTO ELICA
REC44-824110	44-824110	V6	Cola moderna V6 (3.0L) Late Gearcase V6 (3.0L) Piede moderna V6 (3.0L)	15 - 1/2" 39,37 cm	1 - 3/16" 3,016 cm	15	**REC12-31211Q01**
REC44-94148	44-94148	V6	Cola Alpha moderna. **NO MONTAR EN EMBARCACIONES DE COMPETICIÓN** Late Alpha Gearcase. **DON'T USE ON BASS TORNAMENT BOAT ENGINES** Piede Alpha moderno. **NON MONTARE SU IMBARCAZIONI DA COMPETIZIONE**	15 - 1/2" 39,37 cm	1 - 3/16" 3,016 cm	15	**REC12-31211Q01**
	44-93003	L4, L6, V6	Cola 6 en línea antigua Early Inline 6 Gearcase Piede 6 in línea vecchio	15 - 1/4" 38,73 cm	1 - 3/16" 3,016 cm	15	**REC12-31211Q01**
REC44-12238T	44-12238T	L4, V6, XR4, XRG (3 cyl)	Modelo moderno Late Gearcase Modello moderno	15 - 1/2" 39,37 cm	1 - 3/16" 3,016 cm	15	**REC13191Q01**
REC44-850308	44-850308	(3 - 4 cyl)	Modelo moderno Late Gearcase Modello moderno	15 - 1/2" 39,37 cm	1 - 3/16" 3,016 cm	15	**REC13191Q01**
	44-75365	(2, 3, 4 Cyl)	Cola pequeña Small Gearcase Piede piccola	12 - 1/2" 39,37 cm	7/8" 2,22 cm	13	**REC73345A1**

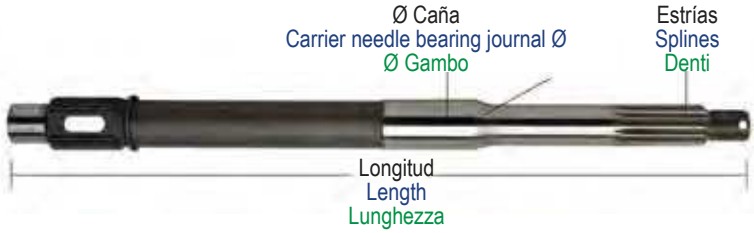

Tope hélice
Prop Thrust washer
Punta elica

EJES TRANSMISIÓN
DRIVE SHAFTS
ASSE TRASMISIONE

REF	RO. OEM	HP	DESCRIPCIÓN DESCRIPTION DESCRIZIONE	LONGITUD LENGTH LUNGHEZZA	Ø ALOJAMIENTO PINION BEARING JOURNAL Ø Ø ALLOGGIAMENTO	ESTRIAS SPLINES DENTI
REC45-816919	45-816472	V6	Cola moderna V6 (3.0L) Late Gearcase V6 (3.0L) Piede moderna V6 (3.0L)	18 - 1/4" 46,35 cm	1 - 1/8" 2,85 cm	13

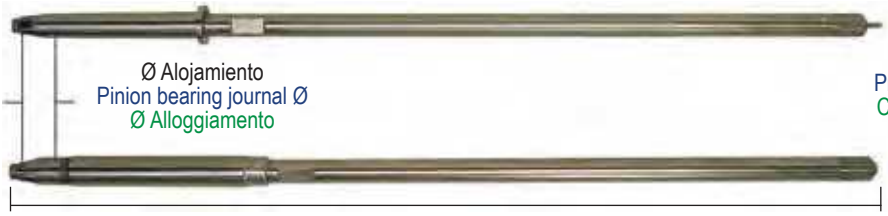

KITS REPARACIÓN BOMBA AGUA
WATER PUMP SERVICE KITS
KIT RICAMBI POMPA ACQUA

Ref.	R.O.
REC46-70941A3	46-70941A3

MOTORES / ENGINES / MOTORI
(1975-85)
4, 4.5, 7.5, 9.8 HP

Ref.	R.O.
REC47-89981Q1	47-89981T2

MOTORES / ENGINES / MOTORI
4 - 9.8 HP
Ø interior impulsor 0.456
Impeller Int. Ø 0.456
Ø Interno girante 0.456

Ref.	R.O.
REC46-42040T5	46-42040A5

MOTORES / ENGINES / MOTORI
6 -15 HP
(2 & 4 Tiempos / 2 & 4 Strokes / 2 & 4 Tempi)

Ref.	R.O.
REC46-99157T2	46-99157T2

MOTORES / ENGINES / MOTORI
(1984+)
15XD, 18XD, 20XD, 25XD, 25 HP (3 cyl)
8- 25 HP
(2 & 4 Tiempos / 2 & 4 Strokes / 2 & 4 Tempi)

Ref.	R.O.
REC47-85089Q4	47-85089T7

MOTORES / ENGINES / MOTORI
18 - 25 HP

Ref.	R.O.
REC47-89982T1	47-89982T1

MOTORES / ENGINES / MOTORI
20 HP

Ref.	R.O.
REC821354A2	821354A2

MOTORES / ENGINES / MOTORI
25 - 50 HP
(2 & 4 Tiempos / 2 & 4 Strokes / 2 & 4 Tempi)

Ref.	R.O.
REC43055A4	43055A4

MOTORES / ENGINES / MOTORI
30 - 125 HP
(2 & 4 Tiempos / 2 & 4 Strokes / 2 & 4 Tempi)

Ref.	R.O.
REC47-89983Q1	47-89983T2

MOTORES / ENGINES / MOTORI
35 - 60 HP

Ref.	R.O.
REC46-812966A12	46-812966A12

MOTORES / ENGINES / MOTORI
(1991+)
40, 50, 60 EFI HP
30 - 60 HP (4 Tiempos / 4 Strokes / 4 Tempi)
Formula 60

Ref.	R.O.
REC47-89984Q5	47-89984T6

MOTORES / ENGINES / MOTORI
V6

Ref.	R.O.
REC47-89980T1	47-89980T1

MOTORES / ENGINES / MOTORI
Ø interior impulsor 0.438
Impeller Int. Ø 0.438
Ø Interno girante 0.438

Ref.	R.O.
REC47-43026Q06	47-43026T11, T8

MOTORES / ENGINES / MOTORI
300 HP
(2 & 4 Tiempos / 2 & 4 Strokes / 2 & 4 Tempi)

Ref.	R.O.
REC47-42038Q3	47-42038T4

Ref.	R.O.
REC47-19453QZ	47-19453Q2

Ref.	R.O.
REC46-60367A1	46-60367A1, 46-96148A8

MOTORES / ENGINES / MOTORI
V-115 - V-200 (2.5L) (EFI/DFI)

Ref.	R.O.
REC46-60366T1	46-60366T1, 46-60366Q1

Ref.	R.O.
REC46-42089A5	46-42089A5

MOTORES / ENGINES / MOTORI
6 - 15 HP
(2 & 4 Tiempos / 2 & 4 Strokes / 2 & 4 Tempi)

Ref.	R.O.
REC46-77177A3	46-77177A3

MOTORES / ENGINES / MOTORI
30 - 70 HP

Ref.	R.O.
REC46-73640A2	46-73640A2

Ref.	R.O.
REC46-812966A11	46-812966A11

MOTORES / ENGINES / MOTORI
40 / 45 JET
40 - 60 HP
(2 & 4 Tiempos / 2 & 4 Strokes / 2 & 4 Tempi)

Ref.	R.O.
REC12094	46-43024A7

MOTORES / ENGINES / MOTORI
40 - 125 HP
(2 & 4 Tiempos / 2 & 4 Strokes / 2 & 4 Tempi)

Ref.	R.O.
REC46-96148A8	46-96148A8

MOTORES / ENGINES / MOTORI
75 - 200 HP
XR-6
(V-Models)

Ref.	R.O.
REC817275A09	817275A09

MOTORES / ENGINES / MOTORI
(2005+)
135, 150, 175, 200, 225, 250, 275 HP Verado
200 / 225 / 250 / 300 (DFI) (3.0L)

Ref.	R.O.
REC817275A6	817275A6

MOTORES / ENGINES / MOTORI
200 DFI
225 (3.0L Carb) EFI (SeaPro)
250 (3.0L EFI)

CUERPOS BOMBA
WATER PUMP HOUSING
CORPI POMPA

Ref.	R.O.
REC46-96148T1	46-96148T1

MOTORES / ENGINES / MOTORI
110 - 140 Jet
V-115 - V-200
XR-6

Ref.	R.O.
REC46-77822A1	46-77822A1

MOTORES / ENGINES / MOTORI
30 Jet
35 / 40 / 402 (2 cyl)
50 / 60 / 70 (3 cyl)
45 / 50 / 500 (4 cyl)

Ref.	R.O.
REC46-42089A2	46-42089A2

MOTORES / ENGINES / MOTORI
6 - 15 HP
(2 & 4 Tiempos / 2 & 4 Strokes / 2 & 4 Tempi)

Ref.	R.O.
REC93224A1	93224A1

MOTORES / ENGINES / MOTORI
4 / 4.5 / 39 / 40 (1 cyl)
7.5 / 9.8 HP

Ref.	R.O.
PAF8-04000009	803752A02

MOTORES / ENGINES / MOTORI
8 & 9.9
(4 Tiempos / 4 Strokes / 4 Tempi)
(209 cc)

Ref.	R.O.
REC46-99157A02	46-99157A02

NEW

MOTORES / ENGINES / MOTORI
8 / 9.9 / 13.5 / 15 (4 Tiempos / 4 Strokes / 4 Tempi)
18 / 20 / 25 (2 Tiempos / 4 Strokes / 4 Tempi)

KITS CUERPOS BOMBA
WATER PUMP HOUSING KITS
KIT CORPI POMPA

Ref.	R.O.
REC817275A1	817275A1

MOTORES / ENGINES / MOTORI
200 - 400 HP
(2 & 4 Tiempos / 2 & 4 Strokes / 2 & 4 Tempi)

Ref.	R.O.
REC817275A2	817275A2

MOTORES / ENGINES / MOTORI
40 - 250 HP
3.0L EFI / SeaPro
(2 & 4 Tiempos / 2 & 4 Strokes / 2 & 4 Tempi)

Ref.	R.O.
REC14334A3	14334A3

MOTORES / ENGINES / MOTORI
30 - 60 HP
Formula 60
(2 & 4 Tiempos / 2 & 4 Strokes / 2 & 4 Tempi)

ACOPLES INOX.
PUMP CAPS
COPERCHIO INOX

Ref.	R.O.
REC48752T	48752
REC48753	48753
REC70977T	70977
REC16157	16157

REC48752T

REC48753

REC70977T

REC16157

Ref.	R.O.
PAF8-04000010	8037511

NEW

MOTORES / ENGINES / MOTORI
6 / 8 / 9.8 (2 T / 2 Strokes / 2 Tempi) (Inter.)
(SeaPro)
8 & 9.9 (209 cc) (4 T / 4 Strokes / 4 Tempi)

TAPA BOMBA AGUA
WATER PUMP PLATE
PIASTRA POMPA ACQUA

Ref.	R.O.
REC46895	46895

MOTORES / ENGINES / MOTORI
4 / 4.5 / 40 / 45 HP (1 cyl)
7.5 / 75 / 60 / 9.8 HP
110 HP

Ref.	R.O.
REC16159	16159

NEW

MOTORES / ENGINES / MOTORI
4 / 5 (2 Tiempos / 2 Strokes / 2 Tempi)
4 / 5 / 6 (4 Tiempos / 4 Strokes / 4 Tempi)

Ref.	R.O.
PAF8-04000007	8037531

NEW

MOTORES / ENGINES / MOTORI
6 / 8 / 9.8 (2 Tiempos / 2 Strokes / 2 Tempi)
8 & 9.9 (4 Tiempos / 4 Strokes / 4 Tempi) (209 cc)

Ref.	R.O.
REC42200	42200

MOTORES / ENGINES / MOTORI
6 - 15 HP
(2 & 4 Tiempos / 2 & 4 Strokes / 2 & 4 Tempi)

Ref.	R.O.
REC85083	85083

MOTORES / ENGINES / MOTORI
8 - 25 HP
(2 & 4 Tiempos / 2 & 4 Strokes / 2 & 4 Tempi)

Ref.	R.O.
REC8213542	821354-2

MOTORES / ENGINES / MOTORI
25 - 50 HP
(2 & 4 Tiempos / 2 & 4 Strokes / 2 & 4 Tempi)

Ref.	R.O.
REC19700A2	19700A2

MOTORES / ENGINES / MOTORI
30 - 60 HP
(2 & 4 Tiempos / 2 & 4 Strokes / 2 & 4 Tempi)

Ref.	R.O.
REC8172761	817276-1

MOTORES / ENGINES / MOTORI
100 - 350 HP
(2 & 4 Tiempos / 2 & 4 Strokes / 2 & 4 Tempi)

Ref.	R.O.
REC324351	32435

MOTORES / ENGINES / MOTORI
110 - 140 Jet
150 - 175 ProXs(2.5L)
V-135 - V-200 HP
XR-6

Ref.	R.O.
REC32768	54705

MOTORES / ENGINES / MOTORI
350 / 500
400 (2 Cyl)
450 (4 Cyl)

BASES BOMBA AGUA
WATER PUMP BASE ASSEMBLY
BASE POMPA ACQUA

Ref.	R.O.
REC46-70941T01	46-70941A1

NEW

MOTORES / ENGINES / MOTORI
3.9 - 9.8 HP
(2 Tiempos / 2 Strokes / 2 Tempi)

Ref.	R.O.
REC46-821307A2	46-821307A2

NEW

MOTORES / ENGINES / MOTORI
25 - 50 HP
(2 & 4 Tiempos / 2 & 4 Strokes / 2 & 4 Tempi)

Ref.	R.O.
REC46-77177A1	46-77177A1

MOTORES / ENGINES / MOTORI
30 Jet
35 - 70 HP

Ref.	R.O.
REC46-812966A7	46-812966A7

MOTORES / ENGINES / MOTORI
30 - 60 HP
(2 & 4 Tiempos / 2 & 4 Strokes / 2 & 4 Tempi)

Ref.	R.O.
REC46-8M0077147	46-42579A3

MOTORES / ENGINES / MOTORI
105- 1470 Jet / 150-175 ProXS
V-135 - V-220 (DFI/EFI) (2.5L)
XR-4 / XR-6

Ref.	R.O.
REC46-96146A6	46-96146A6

MOTORES / ENGINES / MOTORI
V-150 - V-225
(Work /XR-2 / Marathon)
2.4L (EFI) Race Outboard

Ref.	R.O.
REC8M0007131	888909A1

MOTORES / ENGINES / MOTORI
135 - 300 HP
(Verado 4 T / 4 Strokes / 4 Tempi)
200 - 250 HP (DFI 2 T / 2 Strokes / 2 Tempi)

Ref.	R.O.
REC807929A1	807929A1

MOTORES / ENGINES / MOTORI
200 - 300 HP (DFI / EFI / Carb) (3.0L)

Ref.	R.O.
REC46-73640A1	46-73640A1

MOTORES / ENGINES / MOTORI
402
500 / 50
70/ 650 (3 Cyl)

KITS BASES BOMBA AGUA
WATER PUMP BASE ASSEMBLY KIT
KIT BASE POMPA ACQUA

Ref.	R.O.
REC39580	

MOTORES / ENGINES / MOTORI
35 - 60 HP

CASQUILLO
SLINGER
BOCCOLA

Ref.	R.O.
REC25-20273	25-20273
REC25-86203	25-86203
REC25-30271	25-30271

JUNTAS BOMBA
WATER PUMP GASKETS
GUARNIZIONI POMPA

Ref.	R.O.
PAF8-04000006	161586

NEW

MOTORES / ENGINES / MOTORI
6 / 8 / 9.8 (2 T / 2 Strokes / 2 Tempi)
8 / 9.9 (4 T / 4 Strokes / 4 Tempi)

Ref.	R.O.
PAF8-04000005	161587

NEW

MOTORES / ENGINES / MOTORI
6 / 8 / 9.8 (2 T / 2 Strokes / 2 Tempi)
8 / 9.9 (4 T / 4 Strokes / 4 Tempi)

Ref.	R.O.
REC27-19202001	27-19202

MOTORES / ENGINES / MOTORI
6 - 15 HP (1999-06)

Ref.	R.O.
REC27-192043	27-19202

MOTORES / ENGINES / MOTORI
6 - 25 HP (1986-05)

Ref.	R.O.
REC27-85087	27-85087

MOTORES / ENGINES / MOTORI
18/25 HP

Ref.	R.O.
REC27-39626	27-39626

MOTORES / ENGINES / MOTORI
20 / 200

Ref.	R.O.
REC27-396231	27-39623

MOTORES / ENGINES / MOTORI
20 / 200

Ref.	R.O.
REC27-993261	27-99326-1

MOTORES / ENGINES / MOTORI
200/18 / 20 / 25

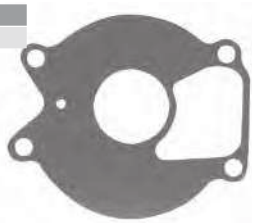

Ref.	R.O.
REC27-39625	27-39625

MOTORES / ENGINES / MOTORI
20 / 200

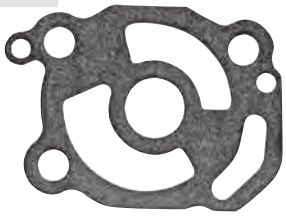

Ref.	R.O.
REC27-822189	27-822189

MOTORES / ENGINES / MOTORI
25 - 50 HP
(2 & 4 Tiempos / 2 & 4 Strokes / 2 & 4 Tempi)

Ref.	R.O.
REC27-822217	27-822217

MOTORES / ENGINES / MOTORI
25 - 50 HP
(2 & 4 Tiempos / 2 & 4 Strokes / 2 & 4 Tempi)

Ref.	R.O.
REC27-19553	27-19553

MOTORES / ENGINES / MOTORI
30 - 45 HP (1987-97)

Ref.	R.O.
REC27-430472	27-43047-2

MOTORES / ENGINES / MOTORI
30-125 HP

Ref.	R.O.
REC27-430331	27-43033-1

MOTORES / ENGINES / MOTORI
30 HP +

Ref.	R.O.
REC27-19551	27-19551

MOTORES / ENGINES / MOTORI
30-60 HP (1987-97)

Ref.	R.O.
REC27-19552	19552

MOTORES / ENGINES / MOTORI
30 Jet
35
40 / 45 (4cyl)

Ref.	R.O.
REC27-8172771	27-43034-1

MOTORES / ENGINES / MOTORI
40-125 HP

Ref.	R.O.
REC27-8M4502052	27-8M4502052

NEW

MOTORES / ENGINES / MOTORI
40 - 60 HP (4 T / 4 Strokes / 4 Tempi)
50 - 60 HP (2 T / 2 Strokes / 2 Tempi)

Ref.	R.O.
REC27-32771	27-32771

MOTORES / ENGINES / MOTORI
40 - 350 (1970-79)

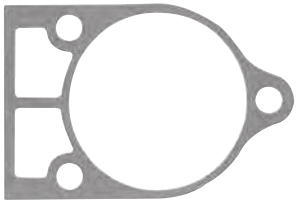

Ref.	R.O.
REC27-32438	27-32438

MOTORES / ENGINES / MOTORI
65-150 HP (1970-85)

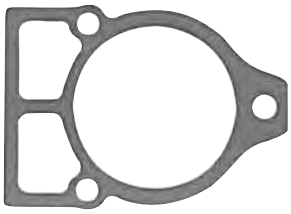

Ref.	R.O.
REC27-426311	27-42631-1

MOTORES / ENGINES / MOTORI
105 / 140 JET
175 PROXS (2.5 L)
V-115 DFI (2.5L)
V-135
V-140
V-150
V-175
V-200
XR-4 / XR-6

Ref.	R.O.
REC27-856081	27-85608-1

MOTORES / ENGINES / MOTORI
V-115 - V-200

Ref.	R.O.
REC27-858524	27-858524

MOTORES / ENGINES / MOTORI
V-115 - V-200

Ref.	R.O.
REC27-856704	27-85610-1

MOTORES / ENGINES / MOTORI
RM/MR (1983-90)

2 TIEMPOS STROKES

IMPULSORES
IMPELLERS
GIRANTI

MODELO / MODEL / MODELLO	REF. RECMAR	REF. CEF	MEDIDAS (mm) / DIMENSIONS (mm) / DIMENSIONI (mm)		
			Ø A	B	C
	REC6G1-44352-00	CEF500302	11,90	40	18
	REC47-22748	CEF500309	11,60	32	14,40
	REC646-44352-01	CEF500322	9,90	36	14,50
	REC6H3-44352-00	CEF500316	19,05	51,80	19,50
	REC682-44352-01	CEF500320	13	40	22
Aplicaciones por modelo revisar "GUÍA BOMBAS DE AGUA"	REC689-44352-02	CEF500326	16,15	69,50	12,80
	REC47-89980	CEF500314	11	32	14,35
Applications per model review "GUIA WATER PUMPS"	REC47-89982	CEF500311G	16	51	19,05
Applicazioni per ciascun modello di revisione "GUIDA POMPE ACQUA"	REC47-89983T	CEF500312	19	61,80	19,05
	REC47-89984T4	CEF500313G	22,20	60	38,80
	REC662-44352-01	CEF500321	14	40	22
	REC6E0-44352-00	CEF500325	11	40	12,60
	REC47-89981	CEF500310	11,60	32	14,40
	REC47-20813		16	39	22,50
	REC47-803630T		21	57	30

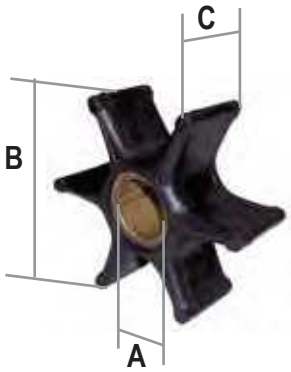

IMPULSORES
IMPELLERS
GIRANTI

MODELO MODEL MODELLO	SERIE SERIAL SERIE	TIPO TYPE TIPO	REF. RECMAR	REF. CEF	MEDIDAS (mm) DIMENSIONS (mm) DIMENSIONI (mm)		
					Ø A	B	C
2/2.5/3.5 (Carb)	0R131842 +		**REC47-161543**	CEF500377	10,25	33,6	14,2
4/5/6	0P073456 +		**REC47-161543**	CEF500377	10,25	33,6	14,2
8	0P325500 +	NON BIG FOOT	**REC3B2-65021-1**	CEF500344	12,10	40,00	18,00
8 (Bodensee)(Intern)	0P086824 - 0P400999	BIG FOOT	**REC47-8508910**	CEF500315	16	73	12,6
8 (Bodensee)(Intern)	0P086824 - 0P400999	NON BIG FOOT	**REC47-420382**	CEF500318	13	58,8	11,7
9.9 (209cc)	0P325500 +	NON BIG FOOT	**REC3B2-65021-1**	CEF500344	12,10	40,00	18,00
9.9 (323cc)	0P075166 - 0P400999	BIG FOOT	**REC47-8508910**	CEF500315	16	73	12,6
9.9 (323cc)	0P075166 - 0P400999	NON BIG FOOT	**REC47-420382**	CEF500318	13	58,8	11,7
13.5 (International)	0P134638 +	BIG FOOT	**REC47-8508910**	CEF500315	16	73	12,6
13.5 (International)	0P134638 +	NON BIG FOOT	**REC47-420382**	CEF500318	13	58,8	11,7
15	0P9973100 +	BIG FOOT	**REC47-8508910**	CEF500315	16	73	12,6
15	0P9973100 +	NON BIG FOOT	**REC47-420382**	CEF500318	13	58,8	11,7
25	9973100 - 0P388282		**REC47-8508910**	CEF500315	16	73	12,6
30	0P017000 - 0P153499	2.31:1	**REC47-43026Q02**	CEF500301	22,4	89	32,5
30	0P017000 - 0P153499	02:01	**REC47-8508910**	CEF500315	16	73	12,6
30 Carb (3Cyl)	0P153500 - 0P400999		**REC47-43026Q02**	CEF500301	22,4	89	32,5
30 EFI (3Cyl)	0P153500 - 0P400999		**REC47-8508910**	CEF500315	16	73	12,6
40	9944807 - 0P153499	2.31:1	**REC47-43026Q02**	CEF500301	22,4	89	32,5
40	9944807 - 0P153499	02:01	**REC47-8508910**	CEF500315	16	73	12,6
40 Carb (3Cyl)	0P153500 +	DRIVE SHAFT L	**REC47-19453T**	CEF500378	19,25	78,2	25,15
40 Carb (3Cyl)	0P153500 +	DRIVE SHAFT S	**REC47-8508910**	CEF500315	16	73	12,6
40 (4Cyl)	0P094500 - 0P206999	1.83:1	**REC47-19453T**	CEF500378	19,25	78,2	25,15
40 (4Cyl)	0P094500 - 0P206999	2.31:1	**REC47-43026Q02**	CEF500301	22,4	89	32,5
40 EFI (3Cyl)	0P401000 - 0P400999		**REC47-8508910**	CEF500315	16	73	12,6
40 EFI (4Cyl)	0P153500 +	1.83:1	**REC47-19453T**	CEF500378	19,25	78,2	25,15
40 EFI (4Cyl)	1C033811	2.33:1	**REC47-43026Q02**	CEF500301	22,4	89	32,5
40 ITALY	0P017000 - 0P094499	BIG FOOT	**REC47-43026Q02**	CEF500301	22,4	89	32,5
40 ITALY	0P017000 - 0P094499	NON BIG FOOT	**REC47-8508910**	CEF500315	16	73	12,6
45 Bodensee	0P017000 +	2.31:1	**REC47-43026Q02**	CEF500301	22,4	89	32,5
45 Bodensee	0P017000 +	1.83:1 / 2:1	**REC47-8508910**	CEF500315	16	73	12,6
50 & BIGFOOT	9944807 - 0P094499	2.31:1	**REC47-43026Q02**	CEF500301	22,4	89	32,5
50 & BIGFOOT	9944807 - 0P094499	1.83:1 / 2:1	**REC47-8508910**	CEF500315	16	73	12,6
50 EFI (4Cyl)	0P153500 +	1.83:1	**REC47-19453T**	CEF500378	19,25	78,2	25,15
50 EFI (4Cyl)	0P153500 +	2.33:1/2.31:1	**REC47-43026Q02**	CEF500301	22,4	89	32,5
50	0P094500 - 0P206999	1.83:1	**REC47-19453T**	CEF500378	19,25	78,2	25,15
50	0P094500 - 0P206999	2.31:1	**REC47-43026Q02**	CEF500301	22,4	89	32,5
60 (4Cyl)	0P094500 - 0P206999	1.83:1	**REC47-19453T**	CEF500378	19,25	78,2	25,15
60 (4Cyl)	0P094500 - 0P206999	2.31:1	**REC47-43026Q02**	CEF500301	22,4	89	32,5
60 EFI (4Cyl)	0P153500 +	2.33:1/2.31:1	**REC47-43026Q02**	CEF500301	22,4	89	32,5
60 EFI (4Cyl)	0P153500 +	1.83:1	**REC47-19453T**	CEF500378	19,25	78,2	25,15
80 EFI	0P459572 +		**REC47-43026Q02**	CEF500301	22,4	89	32,5
100 EFI	0P459572 +		**REC47-43026Q02**	CEF500301	22,4	89	32,5
115 EFI	0T178500 +		**REC47-43026Q02**	CEF500301	22,4	89	32,5
135/150/175/200 VERADO (4Cyl)	0P419487 +		**REC47-43026Q02**	CEF500301	22,4	89	32,5
200/225/250/275/300 VERADO (6Cyl)	0P409357 +		**REC47-43026Q02**	CEF500301	22,4	89	32,5

GUÍA BOMBAS AGUA
WATER PUMP GUIDE
GUIDA POMPA ACQUA

MODELO MODEL MODELLO	AÑO YEAR ANNO	PAÍS COUNTRY PAESE	SERIE SERIAL SERIE	KIT BOMBA PUMP KIT KIT POMPA	KIT SUP. UPPER KIT KIT SUP.	BASE BASE BASE	IMPULSOR IMPELLER GIRANTE	KIT IMPULSOR IMPELLER KIT KIT GIRANTE	CUERPO HOUSING CORPO	TAPA WEAR PLATE COPERCHIO
8 (232cc)	1995-98	USA	0G760300-0T178499	REC46-42089A5		REC46-42040T5	REC47-420382	REC47-42038Q3	REC46-42089A2	REC42200
8 (232cc)		USA	0H017100-0H017349	REC46-42089A5		REC46-42040T5	REC47-420382	REC47-42038Q3	REC46-42089A2	REC42200
8 (323cc) Standard		BEL	0P075166-0P325499	REC46-42089A5		REC46-42040T5	REC47-420382	REC47-42038Q3	REC46-42089A2	REC42200
9.9 (232cc)	1995-98	USA	0H000058-0H016909	REC46-42089A5		REC46-42040T5	REC47-420382	REC47-42038Q3	REC46-42089A2	REC42200
9.9 (323cc) Standard		USA	0G760300-0T979999	REC46-42089A5		REC46-42040T5	REC47-420382	REC47-42038Q3	REC46-42089A2	REC42200
9.9 (323cc) Standard		BEL	0P075166-0P325499	REC46-42089A5		REC46-42040T5	REC47-420382	REC47-42038Q3	REC46-42089A2	REC42200
9.9 (323cc) Bigfoot		USA	0G760300-0T979999		REC46-99157T2		REC47-8508910		REC46-99157T2	REC85083
9.9 (323cc) Bigfoot		BEL	0P075166-0P325499		REC46-99157T2		REC47-8508910		REC46-99157T2	REC85083
15 (323cc) Standard	1998	USA	0G590000 +	REC46-42089A5		REC46-42040T5	REC47-420382	REC47-42038Q3	REC46-42089A2	REC42200
15 (323cc) Standard		BEL	9973100 +	REC46-42089A5		REC46-42040T5	REC47-420382	REC47-42038Q3	REC46-42089A2	REC42200
15 (323cc) Bigfoot	1998	USA	0G590000 +		REC46-99157T2		REC47-8508910		REC46-99157T2	REC85083
15 (323cc) Bigfoot		BEL	9973100 +		REC46-99157T2		REC47-8508910		REC46-99157T2	REC85083
25 Carb.	1998	USA	0G590000-0T408999			REC46-821307A2	REC47-8508910	REC821354A2		REC8213542
25 Carb.		BEL	9973100-0P153499			REC46-821307A2	REC47-8508910	REC821354A2		REC8213542
25 Carb.	1998	USA	0T409000 +			REC46-821307A2	REC47-8508910	REC821354A2		REC8213542
25 Carb.		BEL	0P153500 +			REC46-821307A2	REC47-8508910	REC821354A2		REC8213542

MODELO MODEL MODELLO	AÑO YEAR ANNO	PAÍS COUNTRY PAESE	SERIE SERIAL SERIE	KIT BOMBA PUMP KIT KIT POMPA	KIT SUP. UPPER KIT KIT SUP.	BASE BASE BASE	IMPULSOR IMPELLER GIRANTE	KIT IMPULSOR IMPELLER KIT KIT GIRANTE	CUERPO HOUSING CORPO	TAPA WEAR PLATE COPERCHIO
30 Carb., Standard		USA	0G760300-0T408999			REC46-821307A2	REC47-8508910	REC821354A2		REC8213542
30 Carb., Standard		BEL	0P153500-0P153499			REC46-821307A2	REC47-8508910	REC821354A2		REC8213542
30 Carb., Standard		USA	0T409000 +			REC46-821307A2	REC47-8508910	REC821354A2		REC8213542
30 Carb., Standard		BEL	0P153500 +			REC46-821307A2	REC47-8508910	REC821354A2		REC8213542
30 EFI		USA	0T409000-1B226999			REC46-821307A2	REC47-8508910	REC821354A2		
40 Carb.(3-Cyl.) Standard	1998	USA	0G760300-0T408999			REC46-821307A2	REC47-8508910	REC821354A2		REC8213542
40 Carb.(3-Cyl.) Standard		BEL	0P153500-0P153499			REC46-821307A2	REC47-8508910	REC821354A2		REC8213542
40 Carb.(3-Cyl.) Standard	1998	USA	0T409000 +			REC46-821307A2	REC47-8508910	REC821354A2		REC8213542
40 Carb.(3-Cyl.) Standard		BEL	0P153500 +			REC46-821307A2	REC47-8508910	REC821354A2		REC8213542
40 EFI (3-Cyl.) Standard	1998	USA	0T409000-1B226999			REC46-821307A2	REC47-8508910	REC821354A2		REC8213542
40 EFI (3-Cyl.) Short Shaft	1998	USA	1B227000 +			REC46-821307A2	REC47-8508910	REC821354A2		REC8213542
40 EFI (3-Cyl.) Long Shaft		CHN	1C000001 +	REC46-812966A12		REC46-812966A7	REC47-19453T		REC14334A3	REC19700A2
40 Carb.(4-Cyl.) Bigfoot	1998	USA	0T228405-0T598999	REC12094		REC43055A4	REC47-43026Q02	REC47-43026Q06	REC817275A2	REC8172761
40 Carb.(4-Cyl.) Bigfoot		BEL	0P094500-0P206999	REC12094		REC43055A4	REC47-43026Q02	REC47-43026Q06	REC817275A2	REC8172761
40 EFI (4-Cyl.) Bigfoot	1998	USA	0T409000 +	REC12094		REC43055A4	REC47-43026Q02	REC47-43026Q06	REC817275A2	REC8172761
40 EFI (4-Cyl.) Bigfoot		BEL	0P153500 +	REC12094		REC43055A4	REC47-43026Q02	REC47-43026Q06	REC817275A2	REC8172761
40 EFI (4-Cyl.) Bigfoot		CHN	1C000001 +	REC12094		REC43055A4	REC47-43026Q02	REC47-43026Q06	REC817275A2	REC8172761
45 (4-Cyl.) Bodensee, Std.	1996-98	USA	0G231123-0T178499			REC46-821307A2	REC47-8508910	REC821354A2		REC8213542
45 (4-Cyl.) Bodensee, B.F.	1996-98	USA	0G231123-0T178499	REC12094		REC43055A4	REC47-43026Q02	REC47-43026Q06	REC817275A2	REC8172761
50 Standard	1995-98	USA	0G231123-0T178499			REC46-821307A2	REC47-8508910	REC821354A2		REC8213542
50 Bigfoot	1995-98	USA	0G231123-0T178499	REC12094		REC43055A4	REC47-43026Q02	REC47-43026Q06	REC817275A2	REC8172761
50 Carb.(996cc) Standard	1995-98	USA	0T178500-0T598999	REC46-812966A12		REC46-812966A7	REC47-19453T		REC14334A3	REC19700A2
50 Carb.(996cc) Standard		BEL	0P094500-0P206999	REC46-812966A12		REC46-812966A7	REC47-19453T		REC14334A3	REC19700A2
50 Carb.(996cc) Bigfoot	1995-98	USA	0T178500-0T598999	REC12094		REC43055A4	REC47-43026Q02	REC47-43026Q06	REC817275A2	REC8172761
50 Carb.(996cc) Bigfoot		BEL	0P094500-0P206999	REC12094		REC43055A4	REC47-43026Q02	REC47-43026Q06	REC817275A2	REC8172761
50 EFI (996cc) Standard	1995-98	USA	0T409000 +	REC46-812966A12		REC46-812966A7	REC47-19453T		REC14334A3	REC19700A2
50 EFI (996cc) Standard		BEL	0P153500 +	REC46-812966A12		REC46-812966A7	REC47-19453T		REC14334A3	REC19700A2
50 EFI (996cc) Standard		CHN	1C000001+	REC46-812966A12		REC46-812966A7	REC47-19453T		REC14334A3	REC19700A2
50 EFI (996cc) Bigfoot	1995-98	USA	0T409000 +	REC12094		REC43055A4	REC47-43026Q02	REC47-43026Q06	REC817275A2	REC8172761
50 EFI (996cc) Bigfoot		BEL	0P153500 +	REC12094		REC43055A4	REC47-43026Q02	REC47-43026Q06	REC817275A2	REC8172761
50 EFI (996cc) Bigfoot		CHN	1C000001 +	REC12094		REC43055A4	REC47-43026Q02	REC47-43026Q06	REC817275A2	REC8172761
60 Carb.(996cc) Standard		USA	0T178500-0T598999	REC46-812966A12		REC46-812966A7	REC47-19453T		REC14334A3	REC19700A2
60 Carb.(996cc) Standard		BEL	0P094500-0P206999	REC46-812966A12		REC46-812966A7	REC47-19453T		REC14334A3	REC19700A2
60 Carb.(996cc) Bigfoot		USA	0T178500-0T598999	REC12094		REC43055A4	REC47-43026Q02	REC47-43026Q06	REC817275A2	REC8172761
60 Carb.(996cc) Bigfoot		BEL	0P094500-0P206999	REC12094		REC43055A4	REC47-43026Q02	REC47-43026Q06	REC817275A2	REC8172761
60 EFI (996cc) Standard		USA	0T409000 +	REC46-812966A12		REC46-812966A7	REC47-19453T		REC14334A3	REC19700A2
60 EFI (996cc) Standard		BEL	0P153500 +	REC46-812966A12		REC46-812966A7	REC47-19453T		REC14334A3	REC19700A2
60 EFI (996cc) Standard		CHN	1C000001 +	REC46-812966A12		REC46-812966A7	REC47-19453T		REC14334A3	REC19700A2
60 EFI (996cc) Bigfoot		USA	0T409000 +	REC12094		REC43055A4	REC47-43026Q02	REC47-43026Q06	REC817275A2	REC8172761
60 EFI (996cc) Bigfoot		BEL	0P153500 +	REC12094		REC43055A4	REC47-43026Q02	REC47-43026Q06	REC817275A2	REC8172761
60 EFI (996cc) Bigfoot		CHN	1C000001 +	REC12094		REC43055A4	REC47-43026Q02	REC47-43026Q06	REC817275A2	REC8172761
75 (1596cc)		USA	0G960500-1B366822	REC12094		REC43055A4	REC47-43026Q02	REC47-43026Q06	REC817275A2	REC8172761
90 (1596cc)		USA	0G960500-1B366822	REC12094		REC43055A4	REC47-43026Q02	REC47-43026Q06	REC817275A2	REC8172761
115 (1741cc)		USA	0T178500-1B366822	REC12094		REC43055A4	REC47-43026Q02	REC47-43026Q06	REC817275A2	REC8172761
135 Verado		USA	1B227000 +	REC817275A09	REC817275A08	REC8M0007131	REC47-43026Q02	REC47-43026Q06	REC817275A2	REC8172761
150 Verado		USA	1B227000 +	REC817275A09	REC817275A08	REC8M0007131	REC47-43026Q02	REC47-43026Q06	REC817275A2	REC8172761
175 Verado		USA	1B227000 +	REC817275A09	REC817275A08	REC8M0007131	REC47-43026Q02	REC47-43026Q06	REC817275A2	REC8172761
200 Verado		USA	0T980000 +	REC817275A09	REC817275A08	REC8M0007131	REC47-43026Q02	REC47-43026Q06	REC817275A2	REC8172761
225 Verado		USA	0T980000 +	REC817275A09	REC817275A08	REC8M0007131	REC47-43026Q02	REC47-43026Q06	REC817275A2	REC8172761
250 Verado		USA	0T980000 +	REC817275A09	REC817275A08	REC8M0007131	REC47-43026Q02	REC47-43026Q06	REC817275A2	REC8172761
275 Verado		USA	0T980000 +	REC817275A09	REC817275A08	REC8M0007131	REC47-43026Q02	REC47-43026Q06	REC817275A2	REC8172761
MARK 58 (E)			1139538 +				REC47-89983T			

GUÍA BOMBAS AGUA
WATER PUMP GUIDE
GUIDA POMPA ACQUA

2 TIEMPOS STROKES

MODELO MODEL MODELLO	AÑO YEAR ANNO	PAIS COUNTRY PAESE	SERIE SERIAL SERIE	KIT BOMBA PUMP KIT KIT POMPA	KIT SUP. UPPER KIT KIT SUP.	BASE BASE BASE	IMPULSOR IMPELLER GIRANTE	KIT IMPULSOR IMPELLER KIT KIT GIRANTE	CUERPO HOUSING CORPO	ACOPLE INOX. PUMP CUP CAPPUCIO INOX.	TAPA WEAR PLATE COPERCHIO
3.5	1983-85		6202173 +				REC47-89980			REC70977T	
3.6	1980-82	USA	5404657 +				REC47-89980			REC70977T	
3.6	1980-82	BEL	9252831 +				REC47-89980			REC70977T	
3.6	1980-82	CAN	7145388 +				REC47-89980			REC70977T	
3.9 (14)	1964-71		1655013-2200317				REC47-22748				
3.9 (14)	1964-71		2200318-2498135				REC47-22748				
4 (1-Cyl.) Impulsor / Impeller / Girante 438" Ø Int.	1982-86	USA	5595532-0A809600				REC47-89980	REC47-89980T1	REC93224A1	REC70977T	REC46895
4 (1-Cyl.) Impulsor / Impeller / Girante 438" Ø Int.	1982-86	AUS	8068065 +				REC47-89980	REC47-89980T1	REC93224A1	REC70977T	REC46895
4 (1-Cyl.) Impulsor / Impeller / Girante 438" Ø Int.	1982-86	BEL	9258281-9477829				REC47-89980	REC47-89980T1	REC93224A1	REC70977T	REC46895
4 (1-Cyl.) Impulsor / Impeller / Girante 438" Ø Int.	1982-86	CAN	7143688 +				REC47-89980	REC47-89980T1	REC93224A1	REC70977T	REC46895
4 (1-Cyl.) Impulsor / Impeller / Girante 456" Ø Int.	1982-86	USA	5595532 +	REC46-70941A3		REC46-70941T01	REC47-89981	REC47-89981Q1	REC93224A1	REC70977T	REC46895
4 (1-Cyl.) Impulsor / Impeller / Girante 456" Ø Int.	1982-86	AUS	8068065 +	REC46-70941A3		REC46-70941T01	REC47-89981	REC47-89981Q1	REC93224A1	REC70977T	REC46895
4 (1-Cyl.) Impulsor / Impeller / Girante 456" Ø Int.	1982-86	BEL	9258281 +	REC46-70941A3		REC46-70941T01	REC47-89981	REC47-89981Q1	REC93224A1	REC70977T	REC46895
4 (1-Cyl.) Impulsor / Impeller / Girante 456" Ø Int.	1982-86	CAN	7143688 +	REC46-70941A3		REC46-70941T01	REC47-89981	REC47-89981Q1	REC93224A1	REC70977T	REC46895
40/4 (2-Cyl.) GNAT Impulsor / Impeller / Girante 438" Ø Int.	1976-79	BEL	9075839-9256980				REC47-89980			REC70977T	
40/4 (2-Cyl.) GNAT Impulsor / Impeller / Girante 438" Ø Int.	1976-79	CAN	7085673-7146487				REC47-89980			REC70977T	
40/4 (2-Cyl.) Impulsor / Impeller / Girante 456" Ø Int.	1976-79	BEL	9075839-9256980				REC47-89981			REC70977T	
40/4 (2-Cyl.) Impulsor / Impeller / Girante 456" Ø Int.	1976-79	CAN	7085673-7146487				REC47-89981			REC70977T	
40/4 (2-Cyl.)	1980-81	USA	5589202 +				REC47-89980			REC70977T	
40/4 (2-Cyl.)	1980-81	AUS	8065265 +				REC47-89980			REC70977T	
40/4 (2-Cyl.)	1980-81	BEL	9256981 +				REC47-89980			REC70977T	
40/4 (2-Cyl.)	1980-81	CAN	7146488 +				REC47-89980			REC70977T	
45/4.5 (1-Cyl.)	1975-79	USA	4107220-5595531	REC46-70941A3		REC46-70941T01	REC47-89981	REC47-89981Q1	REC93224A1	REC70977T	REC46895
45/4.5 (1-Cyl.)	1975-79	AUS	8026540-8068064	REC46-70941A3		REC46-70941T01	REC47-89981	REC47-89981Q1	REC93224A1	REC70977T	REC46895
45/4.5 (1-Cyl.)	1975-79	BEL	9072179-9258280	REC46-70941A3		REC46-70941T01	REC47-89981	REC47-89981Q1	REC93224A1	REC70977T	REC46895
45/4.5 (1-Cyl.)	1975-79	CAN	7045758-7147237	REC46-70941A3		REC46-70941T01	REC47-89981	REC47-89981Q1	REC93224A1	REC70977T	REC46895
45/4.5 (1-Cyl.) Impulsor / Impeller / Girante 438" Ø Int.	1980-85	USA	5595532 +				REC47-89980	REC47-89980T1	REC93224A1	REC70977T	REC46895
45/4.5 (1-Cyl.) Impulsor / Impeller / Girante 438" Ø Int.	1980-85	AUS	8068065 +				REC47-89980	REC47-89980T1	REC93224A1	REC70977T	REC46895
45/4.5 (1-Cyl.) Impulsor / Impeller / Girante 438" Ø Int.	1980-85	BEL	9258281 +				REC47-89980	REC47-89980T1	REC93224A1	REC70977T	REC46895
45/4.5 (1-Cyl.) Impulsor / Impeller / Girante 438" Ø Int.	1980-85	CAN	7147238 +				REC47-89980	REC47-89980T1	REC93224A1	REC70977T	REC46895
45/4.5 (1-Cyl.) Impulsor / Impeller / Girante 456" Ø Int.	1980-85	USA	5595532 +	REC46-70941A3		REC46-70941T01	REC47-89981	REC47-89981Q1	REC93224A1	REC70977T	REC46895
45/4.5 (1-Cyl.) Impulsor / Impeller / Girante 456" Ø Int.	1980-85	AUS	8068065 +	REC46-70941A3		REC46-70941T01	REC47-89981	REC47-89981Q1	REC93224A1	REC70977T	REC46895
45/4.5 (1-Cyl.) Impulsor / Impeller / Girante 456" Ø Int.	1980-85	BEL	9258281 +	REC46-70941A3		REC46-70941T01	REC47-89981	REC47-89981Q1	REC93224A1	REC70977T	REC46895
45/4.5 (1-Cyl.) Impulsor / Impeller / Girante 456" Ø Int.	1980-85	CAN	7147238 +	REC46-70941A3		REC46-70941T01	REC47-89981	REC47-89981Q1	REC93224A1	REC70977T	REC46895
60 (6 HP)	1963-65		1408611-1490054				REC47-22748				
60 (6 HP)	1963-65		1490055-1582402				REC47-22748				
60 (6 HP) (12)	1963-65		1582403-1916138				REC47-22748				
60 (6 HP) (12)	1966-68		1916139-2193817				REC47-89981				
60 (6 HP)	1966-68		2193818-2529894				REC47-89981		REC93224A1	REC70977T	REC46895
60J (6 HP)	1967-68		2385673-2387383				REC47-89981				
6	1986-93	USA	0A197112-0T800749	REC46-42089A5		REC46-42040T5	REC47-420382	REC47-42038Q3	REC46-42089A2		REC42200
6	1986-93	BEL	9461526 +	REC46-42089A5		REC46-42040T5	REC47-420382	REC47-42038Q3	REC46-42089A2		REC42200
75 (7.5 HP)	1969-77	USA	2529895-4131609				REC47-89981		REC93224A1	REC70977T	REC46895
75 (7.5 HP)	1974-77	AUS	8015315-8028839				REC47-89981		REC93224A1	REC70977T	REC46895
75 (7.5 HP)	1974-77	BEL	9043194-9079488				REC47-89981		REC93224A1	REC70977T	REC46895
75 (7.5 HP)	1974-77	CAN	7028598-7050207				REC47-89981		REC93224A1	REC70977T	REC46895
75 (7.5 HP)	1974-78	USA	4131610-5226934	REC46-70941A3		REC46-70941T01	REC47-89981	REC47-89981Q1	REC93224A1	REC70977T	REC46895
75 (7.5 HP)	1974-77	AUS	8028840-8058019	REC46-70941A3		REC46-70941T01	REC47-89981	REC47-89981Q1	REC93224A1	REC70977T	REC46895
75 (7.5 HP)	1974-78	BEL	9079489-9219255	REC46-70941A3		REC46-70941T01	REC47-89981	REC47-89981Q1	REC93224A1	REC70977T	REC46895

MODELO MODEL MODELLO	AÑO YEAR ANNO	PAIS COUNTRY PAESE	SERIE SERIAL SERIE	KIT BOMBA PUMP KIT KIT POMPA	KIT SUP. UPPER KIT KIT SUP.	BASE BASE BASE	IMPULSOR IMPELLER GIRANTE	KIT IMPULSOR IMPELLER KIT KIT GIRANTE	CUERPO HOUSING CORPO	ACOPLE INOX. PUMP CUP CAPPUCIO INOX.	TAPA WEAR PLATE COPERCHIO
75 (7.5 HP)	1974-78	CAN	7050206-7136037	REC46-70941A3		REC46-70941T01	REC47-89981	REC47-89981Q1	REC93224A1	REC70977T	REC46895
7.5 HP Impulsor / Impeller / Girante 438" Ø Int.	1979-86	USA	5206550 +				REC47-89980	REC47-89980T1	REC93224A1	REC70977T	REC46895
7.5 HP Impulsor / Impeller / Girante 438" Ø Int.	1979-86	AUS	8057545 +				REC47-89980	REC47-89980T1	REC93224A1	REC70977T	REC46895
7.5 HP Impulsor / Impeller / Girante 438" Ø Int.	1979-86	BEL	9217756 +				REC47-89980	REC47-89980T1	REC93224A1	REC70977T	REC46895
7.5 HP Impulsor / Impeller / Girante 438" Ø Int.	1979-86	CAN	7125388 +				REC47-89980	REC47-89980T1	REC93224A1	REC70977T	REC46895
7.5 HP Impulsor / Impeller / Girante 456" Ø Int.	1979-86	USA	5206550 +	REC46-70941A3		REC46-70941T01	REC47-89981	REC47-89981Q1	REC93224A1	REC70977T	REC46895
7.5 HP Impulsor / Impeller / Girante 456" Ø Int.	1979-86	AUS	8057545 +	REC46-70941A3		REC46-70941T01	REC47-89981	REC47-89981Q1	REC93224A1	REC70977T	REC46895
7.5 HP Impulsor / Impeller / Girante 456" Ø Int.	1979-86	BEL	9217756 +	REC46-70941A3		REC46-70941T01	REC47-89981	REC47-89981Q1	REC93224A1	REC70977T	REC46895
7.5 HP Impulsor / Impeller / Girante 456" Ø Int.	1979-86	CAN	7125388 +	REC46-70941A3		REC46-70941T01	REC47-89981	REC47-89981Q1	REC93224A1	REC70977T	REC46895
8	1986-93	USA	0A197112 +	REC46-42089A5		REC46-42040T5	REC47-420382	REC47-42038Q3	REC46-42089A2		REC42200
8	1986-93	BEL	9461526 +	REC46-42089A5		REC46-42040T5	REC47-420382	REC47-42038Q3	REC46-42089A2		REC42200
110 (9.8 HP) (13)	1966-69		1865779-2196388				REC47-89981				
110 (9.8 HP)	1970-73		2196389-3795657				REC47-89981		REC93224A1	REC70977T	REC46895
110 (9.8 HP)	1974-77	USA	3795658-4126459				REC47-89981		REC46-42089A2	REC70977T	REC46895
110 (9.8 HP)	1974-77	AUS	8015040-8028439				REC47-89981		REC46-42089A2	REC70977T	REC46895
110 (9.8 HP)	1974-77	BEL	9041439-9078138				REC47-89981		REC46-42089A2	REC70977T	REC46895
110 (9.8 HP)	1974-77	CAN	7027323-7049107				REC47-89981		REC46-42089A2	REC70977T	REC46895
110 (9.8 HP)	1974-78	USA	4126460-5206549	REC46-70941A3		REC46-70941T01	REC47-89981	REC47-89981Q1	REC93224A1	REC70977T	REC46895
110 (9.8 HP)	1974-78	AUS	8028440-8057554	REC46-70941A3		REC46-70941T01	REC47-89981	REC47-89981Q1	REC93224A1	REC70977T	REC46895
110 (9.8 HP)	1974-78	BEL	9078139-9217755	REC46-70941A3		REC46-70941T01	REC47-89981	REC47-89981Q1	REC93224A1	REC70977T	REC46895
110 (9.8 HP)	1974-78	CAN	7049108-7125387	REC46-70941A3		REC46-70941T01	REC47-89981	REC47-89981Q1	REC93224A1	REC70977T	REC46895
9.8 HP Impulsor / Impeller / Girante 438" Ø Int.	1979-85	USA	5206550 +				REC47-89980	REC47-89980T1	REC93224A1	REC70977T	REC46895
9.8 HP Impulsor / Impeller / Girante 438" Ø Int.	1979-85	AUS	8057545 +				REC47-89980	REC47-89980T1	REC93224A1	REC70977T	REC46895
9.8 HP Impulsor / Impeller / Girante 438" Ø Int.	1979-85	BEL	9217756 +				REC47-89980	REC47-89980T1	REC93224A1	REC70977T	REC46895
9.8 HP Impulsor / Impeller / Girante 438" Ø Int.	1979-85	CAN	7125388 +				REC47-89980	REC47-89980T1	REC93224A1	REC70977T	REC46895
9.8 HP Impulsor / Impeller / Girante 456" Ø Int.	1979-85	USA	5206550 +	REC46-70941A3		REC46-70941T01	REC47-89981	REC47-89981Q1	REC93224A1	REC70977T	REC46895
9.8 HP Impulsor / Impeller / Girante 456" Ø Int.	1979-85	AUS	8057545 +	REC46-70941A3		REC46-70941T01	REC47-89981	REC47-89981Q1	REC93224A1	REC70977T	REC46895
9.8 HP Impulsor / Impeller / Girante 456" Ø Int.	1979-85	BEL	9217756 +	REC46-70941A3		REC46-70941T01	REC47-89981	REC47-89981Q1	REC93224A1	REC70977T	REC46895
9.8 HP Impulsor / Impeller / Girante 456" Ø Int.	1979-85	CAN	7125388 +	REC46-70941A3		REC46-70941T01	REC47-89981	REC47-89981Q1	REC93224A1	REC70977T	REC46895
9.9	1986-98	USA	0A197112 +	REC46-42089A5		REC46-42040T5	REC47-420382	REC47-42038Q3	REC46-42089A2		REC42200
9.9	1986-93	BEL	9461526 +	REC46-42089A5		REC46-42040T5	REC47-420382	REC47-42038Q3	REC46-42089A2		REC42200
XR10, Sea Pro, 10 Mag.& Marat	1990-98	USA	0D038000 +	REC46-42089A5		REC46-42040T5	REC47-420382	REC47-42038Q3	REC46-42089A2		REC42200
XR10, Sea Pro, 10 Mag.& Mara	1990-98	BEL	9596000 +	REC46-42089A5		REC46-42040T5	REC47-420382	REC47-42038Q3	REC46-42089A2		REC42200
15	1988-98	USA	0B292414 +	REC46-42089A5		REC46-42040T5	REC47-420382	REC47-42038Q3	REC46-42089A2		REC42200
15	1988-93	BEL	9542620 +	REC46-42089A5		REC46-42040T5	REC47-420382	REC47-42038Q3	REC46-42089A2		REC42200
15 Sea Pro & Marathon	1994-98	USA	0G044365 +	REC46-42089A5		REC46-42040T5	REC47-420382	REC47-42038Q3	REC46-42089A2		REC42200
15 Sea Pro & Marathon	1997-98	BEL	9927000 +	REC46-42089A5		REC46-42040T5	REC47-420382	REC47-42038Q3	REC46-42089A2		REC42200
15 XD, Big Foot	1997-98	BEL	9927000 +		REC46-99157T2		REC47-8508910	REC47-85089Q4	REC46-99157T2		REC85083
18, 18XD	1980-85	USA	5837437 +		REC46-99157T2		REC47-8508910	REC47-85089Q4	REC46-99157T2		REC85083
18, 18XD	1980-83	AUS	8071973 +		REC46-99157T2		REC47-8508910	REC47-85089Q4	REC46-99157T2		REC85083
18, 18XD	1980-85	BEL	9308306 +		REC46-99157T2		REC47-8508910	REC47-85089Q4	REC46-99157T2		REC85083
200 (20 HP)	1966-67		1866496-2296266								REC46-96146A6
200 (20 HP) (2)	1968-69		2296267-2827676								REC46-96146A6
200 (20 HP) (4)	1968-69		2296267-2827676								REC46-96146A6
200 (20 HP)	1970-81	USA	2827677-6443972				REC47-89982	REC47-89982T1			REC46-96146A6
200 (20 HP)	1973-81	AUS	8006265 +				REC47-89982	REC47-89982T1			REC46-96146A6
200 (20 HP)	1973-81	BEL	9016254-9415100				REC47-89982	REC47-89982T1			REC46-96146A6
200 (20 HP)	1973-81	CAN	7012358-7209532				REC47-89982	REC47-89982T1			REC46-96146A6
20, 20XD	1986-87	USA	6443973-0T800749		REC46-99157T2		REC47-8508910	REC47-85089Q4	REC46-99157T2		REC85083
20, 20XD	1986-87	BEL	9415101 +		REC46-99157T2		REC47-8508910	REC47-85089Q4	REC46-99157T2		REC85083
20, 20XD	1986-87	CAN	7209533 +		REC46-99157T2		REC47-8508910	REC47-85089Q4	REC46-99157T2		REC85083
25, 25XD	1980-87	USA	5705532 +		REC46-99157T2		REC47-8508910	REC47-85089Q4	REC46-99157T2		REC85083

MODELO MODEL MODELLO	AÑO YEAR ANNO	PAIS COUNTRY PAESE	SERIE SERIAL SERIE	KIT BOMBA PUMP KIT KIT POMPA	KIT SUP. UPPER KIT KIT SUP.	BASE BASE BASE	IMPULSOR IMPELLER GIRANTE	KIT IMPULSOR IMPELLER KIT KIT GIRANTE	CUERPO HOUSING CORPO	ACOPLE INOX. PUMP CUP CAPPUCIO INOX.	TAPA WEAR PLATE COPERCHIO
25, 25XD	1980-83	AUS	8073158 +		REC46-99157T2		REC47-8508910	REC47-85089Q4	REC46-99157T2		REC85083
25 Sea Pro, Mara., Super 15	1988-98	USA	0B238464 +		REC46-99157T2		REC47-8508910	REC47-85089Q4	REC46-99157T2		REC85083
25 Sea Pro, Mara., Super 15	1988-94	BEL	9507381 +		REC46-99157T2		REC47-8508910	REC47-85089Q4	REC46-99157T2		REC85083
25 Sea Pro, Mara., Super 15	1988-94	CAN	0A730007 +		REC46-99157T2		REC47-8508910	REC47-85089Q4	REC46-99157T2		REC85083
25 (3-Cyl.)	1997 +	USA	0E268781 +		REC46-99157T2		REC47-8508910	REC47-85089Q4	REC46-99157T2		REC85083
300 (30 HP)	1959-61		1271884-1448139				REC47-89983T				
30 (2-Cyl.) (644cc)	1994-98	USA	0G053314-0T598999			REC46-821307A2	REC47-8508910	REC821354A2			REC8213542
30 Jet	1994-97	USA	0C159200-0G58999	REC46-77177A3	REC46-60366T1	REC46-77177A1	REC47-89983T	REC47-89983Q1	REC46-77822A1	REC48753	REC32768
30 Jet	1998	USA	0G590000 +				REC47-8508910	REC821354A2			REC8213542
350 (35 HP)	1963-65		157114-1960826				REC47-89983T				
350 (35 HP) (4)	1966-69		1960827-2453068		REC46-60366T1		REC47-89983T		REC46-77822A1	REC48753	REC32768
35 (2-Cyl.)	1984-89	USA	6445653 +	REC46-77177A3	REC46-60366T1	REC46-77177A1	REC47-89983T	REC47-89983Q1	REC46-77822A1	REC48753	REC32768
35 (2-Cyl.)	1984-86	BEL	9384476 +	REC46-77177A3	REC46-60366T1	REC46-77177A1	REC47-89983T	REC47-89983Q1	REC46-77822A1	REC48753	REC32768
35 (2-Cyl.)	1984-86	USA	7209608 +	REC46-77177A3	REC46-60366T1	REC46-77177A1	REC47-89983T	REC47-89983Q1	REC46-77822A1	REC48753	REC32768
400 (40 HP)	1960-61		1279685-1476509				REC47-89983T				
400, 402 (40 HP)	1970-77	USA	2874704-4362214		REC46-60366T1		REC47-89983T	REC47-89983Q1	REC46-77822A1	REC48753	REC32768
400, 402 (40 HP)	1970-77	AUS	8002335-8036449		REC46-60366T1		REC47-89983T	REC47-89983Q1	REC46-77822A1	REC48753	REC32768
400, 402 (40 HP)	1970-77	BEL	3339688-9108563		REC46-60366T1		REC47-89983T	REC47-89983Q1	REC46-77822A1	REC48753	REC32768
400, 402 (40 HP)	1970-77	CAN	3340783-7070272		REC46-60366T1		REC47-89983T	REC47-89983Q1	REC46-77822A1	REC48753	REC32768
402 (40 HP)	1975-77	USA	4362215-4860102		REC46-60366T1	REC46-73640A1	REC47-89983T	REC47-89983Q1	REC46-77822A1	REC48753	REC32768
402 (40 HP)	1975-77	AUS	8036450-8052124		REC46-60366T1	REC46-73640A1	REC47-89983T	REC47-89983Q1	REC46-77822A1	REC48753	REC32768
402 (40 HP)	1975-77	BEL	9108564-9184450		REC46-60366T1	REC46-73640A1	REC47-89983T	REC47-89983Q1	REC46-77822A1	REC48753	REC32768
402 (40 HP)	1975-77	CAN	7070273-7112422		REC46-60366T1	REC46-73640A1	REC47-89983T	REC47-89983Q1	REC46-77822A1	REC48753	REC32768
402, 40 (2-Cyl.) 1983 +	1978-83	USA	4860103 +	REC46-77177A3	REC46-60366T1	REC46-77177A1	REC47-89983T	REC47-89983Q1	REC46-77822A1	REC48753	REC32768
402, 40 (2-Cyl.) 1983 +	1978-83	AUS	8052125 +	REC46-77177A3	REC46-60366T1	REC46-77177A1	REC47-89983T	REC47-89983Q1	REC46-77822A1	REC48753	REC32768
402, 40 (2-Cyl.) 1983 +	1978-83	BEL	9184451 +	REC46-77177A3	REC46-60366T1	REC46-77177A1	REC47-89983T	REC47-89983Q1	REC46-77822A1	REC48753	REC32768
402, 40 (2-Cyl.) 1983 +	1978-83	CAN	7112423 +	REC46-77177A3	REC46-60366T1	REC46-77177A1	REC47-89983T	REC47-89983Q1	REC46-77822A1	REC48753	REC32768
40 (2-Cyl.) (644cc) 1994 +	1994-98	USA	0G053314 +			REC46-821307A2	REC47-8508910	REC821354A2			REC8213542
40 (3-Cyl.)	1997-98	USA	0G531301 +			REC46-821307A2	REC47-8508910	REC821354A2			REC8213542
40 (3-Cyl.)	1997-98	BEL	9973100 +			REC46-821307A2	REC47-8508910	REC821354A2			REC8213542
40 (4-Cyl.)	1989 +	USA	0C159200 +	REC46-77177A3	REC46-60366T1	REC46-77177A1	REC47-89983T	REC47-89983Q1	REC46-77822A1	REC48753	REC32768
40 (4-Cyl.)	1989 +	BEL	9570790 +	REC46-77177A3	REC46-60366T1	REC46-77177A1	REC47-89983T	REC47-89983Q1	REC46-77822A1	REC48753	REC32768
45 Jet	1994-95	USA	0D000750 +	REC46-812966A11			REC47-19453T	REC47-19453QZ	REC14334A3		REC19700A2
45 (4-Cyl.)	1986	USA	5531630 +	REC46-77177A3	REC46-60366T1	REC46-77177A1	REC47-89983T	REC47-89983Q1	REC46-77822A1	REC48753	REC32768
45 (4-Cyl.)	1986	AUS	8063985 +	REC46-77177A3	REC46-60366T1	REC46-77177A1	REC47-89983T	REC47-89983Q1	REC46-77822A1	REC48753	REC32768
45 (4-Cyl.)	1986	BEL	9248006 +	REC46-77177A3	REC46-60366T1	REC46-77177A1	REC47-89983T	REC47-89983Q1	REC46-77822A1	REC48753	REC32768
45 (4-Cyl.)	1986	CAN	743688 +	REC46-77177A3	REC46-60366T1	REC46-77177A1	REC47-89983T	REC47-89983Q1	REC46-77822A1	REC48753	REC32768
500 (50 HP)	1961-64		1421113-1460498				REC47-89983T				
500 (50 HP)	1961-64		1477910-1521913				REC47-89983T				
500 (50 HP)	1961-67	USA	1521914-2305100				REC47-89983T				REC32768
500 (50 HP)	1965-67	CAN	1755549-2305100				REC47-89983T				REC32768
500 (50 HP) (2)	1968-70	USA	2305101-2478119				REC47-89983T				REC32768
500 (50 HP) (4)	1968-70	USA	2305101-2478119		REC46-60366T1		REC47-89983T	REC47-89983Q1	REC46-77822A1	REC48753	REC32768
500 (50 HP) (2)	1971-74	CAN	2305101-2308830				REC47-89983T				REC32768
500 (50 HP) (4)	1971-74	CAN	2305101-2308830		REC46-60366T1		REC47-89983T	REC47-89983Q1	REC46-77822A1	REC48753	REC32768
500 (50 HP)	1971-75	USA	2514919-4357639		REC46-60366T1		REC47-89983T	REC47-89983Q1	REC46-77822A1	REC48753	REC32768
500 (50 HP)	1971-75	AUS	2863739-8030089		REC46-60366T1		REC47-89983T	REC47-89983Q1	REC46-77822A1	REC48753	REC32768
500 (50 HP)	1971-75	BEL	9001581-9107213		REC46-60366T1		REC47-89983T	REC47-89983Q1	REC46-77822A1	REC48753	REC32768
500 (50 HP)	1971-75	CAN	2519919-7068997		REC46-60366T1		REC47-89983T	REC47-89983Q1	REC46-77822A1	REC48753	REC32768
500, 50 HP (4-Cyl.)	1976-79	USA	4357640-5531629	REC46-73640A2	REC46-60366T1	REC46-73640A1	REC47-89983T	REC47-89983Q1	REC46-77822A1	REC48753	REC32768
500, 50 HP (4-Cyl.)	1976-79	AUS	8030090-8063984	REC46-73640A2	REC46-60366T1	REC46-73640A1	REC47-89983T	REC47-89983Q1	REC46-77822A1	REC48753	REC32768
500, 50 HP (4-Cyl.)	1976-79	BEL	9107214-9248005	REC46-73640A2	REC46-60366T1	REC46-73640A1	REC47-89983T	REC47-89983Q1	REC46-77822A1	REC48753	REC32768
500, 50 HP (4-Cyl.)	1976-79	CAN	7068998-7143687	REC46-73640A2	REC46-60366T1	REC46-73640A1	REC47-89983T	REC47-89983Q1	REC46-77822A1	REC48753	REC32768
50 HP (4-Cyl.)	1980-85	USA	5531630 +	REC46-77177A3	REC46-60366T1	REC46-77177A1	REC47-89983T	REC47-89983Q1	REC46-77822A1	REC48753	REC32768
50 HP (4-Cyl.)	1980-85	AUS	8063985 +	REC46-77177A3	REC46-60366T1	REC46-77177A1	REC47-89983T	REC47-89983Q1	REC46-77822A1	REC48753	REC32768
50 HP (4-Cyl.)	1980-85	BEL	9248006 +	REC46-77177A3	REC46-60366T1	REC46-77177A1	REC47-89983T	REC47-89983Q1	REC46-77822A1	REC48753	REC32768
50 HP (4-Cyl.)	1980-85	CAN	7143688 +	REC46-77177A3	REC46-60366T1	REC46-77177A1	REC47-89983T	REC47-89983Q1	REC46-77822A1	REC48753	REC32768
50 HP (3-Cyl.)	1986-87	USA	6428681-0D000749	REC46-77177A3	REC46-60366T1	REC46-77177A1	REC47-89983T	REC47-89983Q1	REC46-77822A1	REC48753	REC32768
50 HP (3-Cyl.)	1986-87	BEL	9385911-9683054	REC46-77177A3	REC46-60366T1	REC46-77177A1	REC47-89983T	REC47-89983Q1	REC46-77822A1	REC48753	REC32768
50 HP (3-Cyl.)	1986-87	CAN	7208333 +	REC46-77177A3	REC46-60366T1	REC46-77177A1	REC47-89983T	REC47-89983Q1	REC46-77822A1	REC48753	REC32768
50 HP (3-Cyl.)	1991-97	USA	0D000750-0G58999	REC46-812966A11		REC46-812966A7	REC47-19453T	REC47-19453QZ	REC14334A3		REC19700A2
50 HP (3-Cyl.)	1991-97	BEL	9683055-9973099	REC46-812966A11		REC46-812966A7	REC47-19453T	REC47-19453QZ	REC14334A3		REC19700A2
50 HP (3-Cyl.)	1998	USA	0G590000 +			REC46-821307A2	REC47-8508910	REC821354A2			REC8213542
50 HP (3-Cyl.)	1998	BEL	9973100 +			REC46-821307A2	REC47-8508910	REC821354A2			REC8213542
55 HP (3-Cyl.)	1996-97	USA	0D000750 +	REC46-812966A11		REC46-812966A7	REC47-19453T	REC47-19453QZ	REC14334A3		REC19700A2
55 HP (3-Cyl.)	1996-97	BEL	9741042 +	REC46-812966A11		REC46-812966A7	REC47-19453T	REC47-19453QZ	REC14334A3		REC19700A2
60 HP (3-Cyl.)	1984-87	USA	6428681-0D000749	REC46-77177A3	REC46-60366T1	REC46-77177A1	REC47-89983T	REC47-89983Q1	REC46-77822A1	REC48753	REC32768
60 HP (3-Cyl.)	1984-87	BEL	9385911-9683054	REC46-77177A3	REC46-60366T1	REC46-77177A1	REC47-89983T	REC47-89983Q1	REC46-77822A1	REC48753	REC32768
60 HP (3-Cyl.)	1984-87	CAN	7208333 +	REC46-77177A3	REC46-60366T1	REC46-77177A1	REC47-89983T	REC47-89983Q1	REC46-77822A1	REC48753	REC32768
60 HP (3-Cyl.) Standard	1991-95	USA	0D000750 +	REC46-812966A11		REC46-812966A7	REC47-19453T	REC47-19453QZ	REC14334A3		REC19700A2
60 HP (3-Cyl.) Standard	1991-95	BEL	9683055 +	REC46-812966A11		REC46-812966A7	REC47-19453T	REC47-19453QZ	REC14334A3		REC19700A2
60 HP (3-Cyl.) Bigfoot	1991-95	USA	0D000750 +	REC12094		REC43055A4	REC47-43026Q02	REC47-43026Q06	REC817275A2		REC8172761

MODELO MODEL MODELLO	AÑO YEAR ANNO	PAIS COUNTRY PAESE	SERIE SERIAL SERIE	KIT BOMBA PUMP KIT KIT POMPA	KIT SUP. UPPER KIT KIT SUP.	BASE BASE BASE	IMPULSOR IMPELLER GIRANTE	KIT IMPULSOR IMPELLER KIT KIT GIRANTE	CUERPO HOUSING CORPO	ACOPLE INOX. PUMP CUP CAPPUCIO INOX.	TAPA WEAR PLATE COPERCHIO
60 HP (3-Cyl.) Bigfoot	1991-95	BEL	9683055 +	REC12094		REC43055A4	REC47-43026Q02	REC47-43026Q06	REC817275A2		REC8172761
650 (65 HP) (4-Cyl.) (2)	1963-69		1542745-2803561		REC46-60367A1		REC47-89984T4	REC47-89984Q5	REC46-96148T1		REC324351
650 (65 HP) (4-Cyl.) (4)	1963-69		1542745-2803561		REC46-60367A1		REC47-89984T4	REC47-89984Q5	REC46-96148T1	REC48752T	REC324351
650 (65 HP) (4-Cyl.)	1970-72		2803562-2874263		REC46-60367A1		REC47-89984T4	REC47-89984Q5	REC46-96148T1	REC48752T	REC324351
650 (65 HP) (4-Cyl.)	1970-72		2997439-3293183		REC46-60367A1	-	REC47-89984T4	REC47-89984Q5	REC46-96148T1	REC48752T	REC324351
65 HP (3-Cyl.)	1972-75	USA	3293184-4382056		REC46-60366T1		REC47-89983T		REC46-77822A1	REC48753	REC32768
65 HP (3-Cyl.)	1973-75	AUS	8006640-8042349		REC46-60366T1		REC47-89983T		REC46-77822A1	REC48753	REC32768
65 HP (3-Cyl.)	1973-75	BEL	9020074-9112988		REC46-60366T1		REC47-89983T		REC46-77822A1	REC48753	REC32768
65 HP (3-Cyl.)	1973-75	CAN	7013633-7073472		REC46-60366T1		REC47-89983T		REC46-77822A1	REC48753	REC32768
65 HP (3-Cyl.)	1976	USA	4382057-4571651		REC46-60366T1	REC46-73640A1	REC47-89983T		REC46-77822A1	REC48753	REC32768
65 HP (3-Cyl.)	1976	BEL	9112989-9135824		REC46-60366T1	REC46-73640A1	REC47-89983T		REC46-77822A1	REC48753	REC32768
65 HP (3-Cyl.)	1976	CAN	7073473-7087822		REC46-60366T1	REC46-73640A1	REC47-89983T		REC46-77822A1	REC48753	REC32768
65 Jet	1994-98	USA	0D283222 +	REC12094		REC43055A4	REC47-43026Q02	REC47-43026Q06	REC817275A2		REC8172761
65 Jet	1994-98	BEL	9793577 +	REC12094		REC43055A4	REC47-43026Q02	REC47-43026Q06	REC817275A2		REC8172761
700 (70 HP) (6-Cyl.)	1961		1413611-1436114				REC47-89984T4				REC324351
700 (70 HP) (6-Cyl.)	1961		1482212-1503458				REC47-89984T4				
700 E-2 (70 HP) (6-Cyl.)	1961		1503459-1503958				REC47-89984T4				
700 EL-2 (70 HP) (6-Cyl.)	1961		1503459-1505110				REC47-89984T4				
700 E-2 (70 HP) (6-Cyl.) (11)	1961		1503959-1566239		REC46-60367A1		REC47-89984T4	REC47-89984Q5	REC46-96148T1		REC324351
700 EL-2 (70 HP) (6-Cyl.) (11)	1961		1505111-1566239		REC46-60367A1		REC47-89984T4	REC47-89984Q5	REC46-96148T1		REC324351
70 HP (3-Cyl.)	1977-79	USA	4571652-4977156	REC46-73640A2	REC46-60366T1	REC46-73640A1	REC47-89983T		REC46-77822A1	REC48753	REC32768
70 HP (3-Cyl.)	1977-79	AUS	8042350-8050199	REC46-73640A2	REC46-60366T1	REC46-73640A1	REC47-89983T		REC46-77822A1	REC48753	REC32768
70 HP (3-Cyl.)	1977-79	BEL	9135825-9196960	REC46-73640A2	REC46-60366T1	REC46-73640A1	REC47-89983T		REC46-77822A1	REC48753	REC32768
70 HP (3-Cyl.)	1977-79	CAN	7087823-7110997	REC46-73640A2	REC46-60366T1	REC46-73640A1	REC47-89983T		REC46-77822A1	REC48753	REC32768
70 HP (3-Cyl.)	1977-83	USA	4977157-6428680	REC46-77177A3	REC46-60366T1	REC46-77177A1	REC47-89983T	REC47-89983Q1	REC46-77822A1	REC48753	REC32768
70 HP (3-Cyl.)	1977-83	AUS	8050200 +	REC46-77177A3	REC46-60366T1	REC46-77177A1	REC47-89983T	REC47-89983Q1	REC46-77822A1	REC48753	REC32768
70 HP (3-Cyl.)	1977-83	BEL	9196961-9385910	REC46-77177A3	REC46-60366T1	REC46-77177A1	REC47-89983T	REC47-89983Q1	REC46-77822A1	REC48753	REC32768
70 HP (3-Cyl.)	1977-83	CAN	7110998-7208332	REC46-77177A3	REC46-60366T1	REC46-77177A1	REC47-89983T	REC47-89983Q1	REC46-77822A1	REC48753	REC32768
70 HP (3-Cyl.) (6)	1987	USA	0A996142-0C221999	REC12094		REC43055A4	REC47-43026Q02		REC817275A2		REC817275A2
70 HP (3-Cyl.) (6)	1987	BEL	9483121-9589038	REC12094		REC43055A4	REC47-43026Q02		REC817275A2		REC817275A2
70 HP (3-Cyl.) (5)	1987	USA	0A996142-0C221999	REC12094		REC43055A4	REC47-43026Q02	REC47-43026Q06	REC817275A2		REC8172761
70 HP (3-Cyl.) (5)	1987	BEL	9483121-9589038	REC12094		REC43055A4	REC47-43026Q02	REC47-43026Q06	REC817275A2		REC8172761
75 HP (4-Cyl.)	1984-88	USA	6432901 +	-	REC46-60367A1		REC47-89984T4	REC47-89984Q5	REC46-96148T1	REC48752T	REC324351
75 HP (4-Cyl.)	1984-88	BEL	9393856 +	-	REC46-60367A1		REC47-89984T4	REC47-89984Q5	REC46-96148T1	REC48752T	REC324351
75 HP (4-Cyl.)	1984-88	CAN	7208573 +	-	REC46-60367A1		REC47-89984T4	REC47-89984Q5	REC46-96148T1	REC48752T	REC324351
75 HP (3-Cyl.) (6)	1990-98	USA	0C222000 +	REC12094		REC43055A4	REC47-43026Q02	REC47-43026Q06	REC817275A2		REC817275A2
75 HP (3-Cyl.) (6)	1990-98	BEL	9589039 +	REC12094		REC43055A4	REC47-43026Q02	REC47-43026Q06	REC817275A2		REC817275A2
75 HP (3-Cyl.) (5)	1990-98	USA	0C222000 +	REC12094		REC43055A4	REC47-43026Q02	REC47-43026Q06	REC817275A2		REC8172761
75 HP (3-Cyl.) (5)	1990-98	BEL	9589039 +	REC12094		REC43055A4	REC47-43026Q02	REC47-43026Q06	REC817275A2		REC8172761
75 (3-Cyl.) **Optimax**	1994-98	USA	0T980000 +	REC12094		REC43055A4	REC47-43026Q02	REC47-43026Q06	REC817275A2		REC8172761
800 (80 HP) (6-Cyl.)	1960		1335465-1398629				REC47-89984T4				
800 (80 HP) (6-Cyl.)	1961		1398630-1566239				REC47-89984T4				REC324351
800 (80 HP) (4-Cyl.)	1969-72		2559001-3144218		REC46-60367A1		REC47-89984T4	REC47-89984Q5	REC46-96148T1	REC48752T	REC324351
800 (80 HP) (4-Cyl.)	1969-72		3144219-3493912		REC46-60367A1	-	REC47-89984T4	REC47-89984Q5	REC46-96148T1	REC48752T	REC324351
80 HP (4-Cyl.)	1978-83	USA	4831999-6432900		REC46-60367A1		REC47-89984T4	REC47-89984Q5	REC46-96148T1	REC48752T	REC324351
80 HP (4-Cyl.)	1978-83	AUS	8050200 +		REC46-60367A1		REC47-89984T4	REC47-89984Q5	REC46-96148T1	REC48752T	REC324351
80 HP (4-Cyl.)	1978-83	BEL	9177626-9393855		REC46-60367A1		REC47-89984T4	REC47-89984Q5	REC46-96148T1	REC48752T	REC324351
80 HP (4-Cyl.)	1978-83	CAN	7110998-7208572		REC46-60367A1		REC47-89984T4	REC47-89984Q5	REC46-96148T1	REC48752T	REC324351
80 HP (3-Cyl.) (6)	1987	USA	0A996142-0C221999	REC12094		REC43055A4	REC47-43026Q02		REC817275A2		REC817275A2
80 HP (3-Cyl.) (6)	1987	BEL	9483121-9589038	REC12094		REC43055A4	REC47-43026Q02		REC817275A2		REC817275A2
80 HP (3-Cyl.) (5)	1987	USA	0A996142-0C221999 12094		REC43055A4	REC47-43026Q02	REC47-43026Q06	REC817275A2		REC8172761	
80 HP (3-Cyl.) (5)	1987	BEL	9483121-9589038	REC12094		REC43055A4	REC47-43026Q02	REC47-43026Q06	REC817275A2		REC8172761
80 Jet	1994-98	USA	0D283222 +	REC12094		REC43055A4	REC47-43026Q02	REC47-43026Q06	REC817275A2		REC8172761
80 Jet	1994-98	BEL	9793577 +	REC12094		REC43055A4	REC47-43026Q02	REC47-43026Q06	REC817275A2		REC8172761
850 E, EL (85 HP) (6-Cyl.)	1963-64		1460999-1567039				REC47-89984T4				
850 E-1, EL-1 (85 HP) (6-Cyl.) (11)	1963-64		1566240-1766823		REC46-60367A1		REC47-89984T4	REC47-89984Q5	REC46-96148T1		REC324351
850, 850 XS (85 HP) (4-Cyl.)	1973-77	USA	3493913-4590511		REC46-60367A1	-	REC47-89984T4	REC47-89984Q5	REC46-96148T1	REC48752T	REC324351
850, 850 XS (85 HP) (4-Cyl.)	1973-77	BEL	9011604-9139349		REC46-60367A1	-	REC47-89984T4	REC47-89984Q5	REC46-96148T1	REC48752T	REC324351
850, 850 XS (85 HP) (4-Cyl.)	1973-77	CAN	7010108-7091097		REC46-60367A1	-	REC47-89984T4	REC47-89984Q5	REC46-96148T1	REC48752T	REC324351
850 SX (85 HP) (4-Cyl.)	1973-77	USA	3493913-4831998		REC46-60367A1		REC47-89984T4	REC47-89984Q5	REC46-96148T1	REC48752T	REC324351
850 SX (85 HP) (4-Cyl.)	1976-77	AUS	8043775-8050199		REC46-60367A1		REC47-89984T4	REC47-89984Q5	REC46-96148T1	REC48752T	REC324351
850 SX (85 HP) (4-Cyl.)	1973-77	BEL	9011604-9177625		REC46-60367A1		REC47-89984T4	REC47-89984Q5	REC46-96148T1	REC48752T	REC324351
850 SX (85 HP) (4-Cyl.)	1973-77	CAN	7010108-7110997		REC46-60367A1		REC47-89984T4	REC47-89984Q5	REC46-96148T1	REC48752T	REC324351
850 SX (85 HP) (4-Cyl.)	1973-77	USA	3493913-4831998		REC46-60367A1		REC47-89984T4	REC47-89984Q5	REC46-96148T1	REC48752T	REC324351
850 SX (85 HP) (4-Cyl.)	1973-77	AUS	8043775-8050199		REC46-60367A1		REC47-89984T4	REC47-89984Q5	REC46-96148T1	REC48752T	REC324351
850 SX (85 HP) (4-Cyl.)	1973-77	BEL	9011604-9177625		REC46-60367A1		REC47-89984T4	REC47-89984Q5	REC46-96148T1	REC48752T	REC324351
850 SX (85 HP) (4-Cyl.)	1973-77	CAN	7010108-7110997		REC46-60367A1		REC47-89984T4	REC47-89984Q5	REC46-96148T1	REC48752T	REC324351

MODELO MODEL MODELLO	AÑO YEAR ANNO	PAIS COUNTRY PAESE	SERIE SERIAL SERIE	KIT BOMBA PUMP KIT KIT POMPA	KIT SUP. UPPER KIT KIT SUP.	BASE BASE BASE	IMPULSOR IMPELLER GIRANTE	KIT IMPULSOR IMPELLER KIT KIT GIRANTE	CUERPO HOUSING CORPO	ACOPLE INOX. PUMP CUP CAPPUCIO INOX.	TAPA WEAR PLATE COPERCHIO
900 (90 HP) (6-Cyl.) (11)			1766824-1869775		REC46-60367A1		REC47-89984T4	REC47-89984Q5	REC46-96148T1		REC324351
90 HP (6-Cyl.)	1978-86	USA	4845301 +		REC46-60367A1		REC47-89984T4	REC47-89984Q5	REC46-96148T1	REC48752T	REC324351
90 HP (6-Cyl.)	1979-83	AUS	8060545 +		REC46-60367A1		REC47-89984T4	REC47-89984Q5	REC46-96148T1	REC48752T	REC324351
90 HP (6-Cyl.)	1978-86	CAN	7111698 +		REC46-60367A1		REC47-89984T4	REC47-89984Q5	REC46-96148T1	REC48752T	REC324351
90 HP (3-Cyl.) (6)	1987	USA	0A996142 +	REC12094		REC43055A4	REC47-43026Q02		REC817275A2		REC817275A2
90 HP (3-Cyl.) (6)	1987	BEL	9483121 +	REC12094		REC43055A4	REC47-43026Q02		REC817275A2		REC817275A2
90 HP (3-Cyl.) (5)	1987	USA	0A996142 +	REC12094		REC43055A4	REC47-43026Q02	REC47-43026Q06	REC817275A2		REC8172761
90 HP (3-Cyl.) (5)	1987	BEL	9483121 +	REC12094		REC43055A4	REC47-43026Q02	REC47-43026Q06	REC817275A2		REC8172761
115 (3-Cyl.) **Optimax**	-	USA	0T801000 +	REC12094		REC43055A4	REC47-43026Q02	REC47-43026Q06	REC817275A2		REC8172761
950 (95 HP) (6-Cyl.) (11)	1966-67		1869776-2318585		REC46-60367A1		REC47-89984T4	REC47-89984Q5	REC46-96148T1		REC324351
1000 (100 HP) (6-Cyl.)	1962-63		1464949-1503331		-	-	REC47-89984T4				
1000 (100 HP) (6-Cyl.) (11)	1962-65		1503332-2318585		REC46-60367A1		REC47-89984T4	REC47-89984Q5	REC46-96148T1		REC324351
1000 SS (E) (100 HP) (6-Cyl.) (1)	1962-65	USA	2318586-2413843		REC46-60367A1		REC47-89984T4	REC47-89984Q5	REC46-96148T1		REC324351
1000 SS (E) (100 HP) (6-Cyl.) (1)	1962-65	CAN	2320991-2321200		REC46-60367A1		REC47-89984T4	REC47-89984Q5	REC46-96148T1		REC324351
1000 SS (E) (100 HP) (6-Cyl.) (3)	1968-69	USA	2318586-2413843		REC46-60367A1		REC47-89984T4	REC47-89984Q5	REC46-96148T1	REC48752T	REC324351
1000 SS (E) (100 HP) (6-Cyl.) (3)	1968-69	CAN	2320991-2321200		REC46-60367A1		REC47-89984T4	REC47-89984Q5	REC46-96148T1	REC48752T	REC324351
1000 SS (E-1) (100 HP) (6-Cyl.)	1968-69	USA	2484633-2836018		REC46-60367A1		REC47-89984T4	REC47-89984Q5	REC46-96148T1		REC324351
1000 SS (E-1) (100 HP) (6-Cyl.) (1)	1968-69	CAN	2487363-2836018		REC46-60367A1		REC47-89984T4	REC47-89984Q5	REC46-96148T1		REC324351
1000 SS (E-1) (100 HP) (6-Cyl.) (3)	1968-69	USA	2484633-2836018		REC46-60367A1		REC47-89984T4	REC47-89984Q5	REC46-96148T1	REC48752T	REC324351
1000 SS (E-1) (100 HP) (6-Cyl.) (3)	1968-69	CAN	2487363-2836018		REC46-60367A1		REC47-89984T4	REC47-89984Q5	REC46-96148T1	REC48752T	REC324351
1000 BP (100 HP) (6-Cyl.)	1968-69		2399698-3253111			-	REC47-89984T4				
100 HP (4-Cyl.) (6)	1988-98	USA	0B209468 +	REC12094		REC43055A4	REC47-43026Q02		REC817275A2		REC817275A2
100 HP (4-Cyl.) (6)	1988-98	BEL	9523034 +	REC12094		REC43055A4	REC47-43026Q02		REC817275A2		REC817275A2
100 HP (4-Cyl.) (5)	1988-98	USA	0B209468 +	REC12094		REC43055A4	REC47-43026Q02	REC47-43026Q06	REC817275A2		REC8172761
100 HP (4-Cyl.) (5)	1988-98	BEL	9523034 +	REC12094		REC43055A4	REC47-43026Q02	REC47-43026Q06	REC817275A2		REC8172761
105 Jet	1994-95	USA	0D082000 +		REC46-60367A1	REC46-8M0077147	REC47-89984T4	REC47-89984Q5	REC46-96148T1	REC48752T	REC324351
105 Jet	1994-95	BEL	9682500 +		REC46-60367A1	REC46-8M0077147	REC47-89984T4	REC47-89984Q5	REC46-96148T1	REC48752T	REC324351
1100 (110 HP) (6-Cyl.) (1)	1966-67		1870204-2314955		REC46-60367A1		REC47-89984T4	REC47-89984Q5	REC46-96148T1		REC324351
1100 (110 HP) (6-Cyl.) (3)	1966-67		1870204-2314955		REC46-60367A1		REC47-89984T4	REC47-89984Q5	REC46-96148T1	REC48752T	REC324351
1150 (115 HP) (6-Cyl.)	1970-77	USA	2836019-4112634		REC46-60367A1	REC43055A4	REC47-89984T4	REC47-89984Q5	REC46-96148T1	REC48752T	REC324351
1150 (115 HP) (6-Cyl.)	1973-77	AUS	8008665-8027114		REC46-60367A1	REC43055A4	REC47-89984T4	REC47-89984Q5	REC46-96148T1	REC48752T	REC324351
1150 (115 HP) (6-Cyl.)	1973-77	CAN	7010763-7047257		REC46-60367A1	REC43055A4	REC47-89984T4	REC47-89984Q5	REC46-96148T1	REC48752T	REC324351
1150 (115 HP) (6-Cyl.)	1973-77	USA	4112635-4394236		REC46-60367A1		REC47-89984T4	REC47-89984Q5	REC46-96148T1	REC48752T	REC324351
1150 (115 HP) (6-Cyl.)	1973-77	AUS	8027115-8027439		REC46-60367A1		REC47-89984T4	REC47-89984Q5	REC46-96148T1	REC48752T	REC324351
1150 (115 HP) (6-Cyl.)	1973-77	CAN	7047258-7075522		REC46-60367A1		REC47-89984T4	REC47-89984Q5	REC46-96148T1	REC48752T	REC324351
115 HP (6-Cyl.)	1973-88	USA	4394237 +		REC46-60367A1		REC47-89984T4	REC47-89984Q5	REC46-96148T1	REC48752T	REC324351
115 HP (6-Cyl.)	1973-83	AUS	8027440 +		REC46-60367A1		REC47-89984T4	REC47-89984Q5	REC46-96148T1	REC48752T	REC324351
115 HP (6-Cyl.)	1973-88	CAN	7075523 +		REC46-60367A1		REC47-89984T4	REC47-89984Q5	REC46-96148T1	REC48752T	REC324351
115 HP (4-Cyl.) (6)	1989-98	USA	0C100000 +	REC12094		REC43055A4	REC47-43026Q02		REC817275A2		REC817275A2
115 HP (4-Cyl.) (6)	1989-98	BEL	9559771 +	REC12094		REC43055A4	REC47-43026Q02		REC817275A2		REC817275A2
115 HP (4-Cyl.) (5)	1989-98	USA	0C100000 +	REC12094		REC43055A4	REC47-43026Q02	REC47-43026Q06	REC817275A2		REC8172761
115 HP (4-Cyl.) (5)	1989-98	BEL	9559771 +	REC12094		REC43055A4	REC47-43026Q02	REC47-43026Q06	REC817275A2		REC8172761
115 (3-Cyl.) **Optimax**	-	USA	0T801000 +	REC12094		REC43055A4	REC47-43026Q02	REC47-43026Q06	REC817275A2		REC8172761
1250 (125 HP) (6-Cyl.) (2)	1968-69		2314956-2839368		REC46-60367A1		REC47-89984T4	REC47-89984Q5	REC46-96148T1		REC324351
1250 (125 HP) (6-Cyl.) (4)	1968-69		2314956-2839368		REC46-60367A1		REC47-89984T4	REC47-89984Q5	REC46-96148T1	REC48752T	REC324351
1250 BP (125 HP) (6-Cyl.)	1968-69		2400058-3253111				REC47-89984T4				
125 HP (4-Cyl.) (6)	1994-98	USA	0D283222 +	REC12094		REC43055A4	REC47-43026Q02		REC817275A2		REC817275A2
125 HP (4-Cyl.) (6)	1994-98	BEL	9793577 +	REC12094		REC43055A4	REC47-43026Q02		REC817275A2		REC817275A2
125 HP (4-Cyl.) (5)	1994-98	USA	0D283222 +	REC12094		REC43055A4	REC47-43026Q02	REC47-43026Q06	REC817275A2		REC8172761
125 HP (4-Cyl.) (5)	1994-98	BEL	9793577 +	REC12094		REC43055A4	REC47-43026Q02	REC47-43026Q06	REC817275A2		REC8172761
1350 (6-Cyl.)	1970-71	USA	2839369-3293233		REC46-60367A1		REC47-89984T4	REC47-89984Q5	REC46-96148T1	REC48752T	REC324351
1400 (140 HP) (6-Cyl.)	1972		3293234-3502805		REC46-60367A1		REC47-89984T4	REC47-89984Q5	REC46-96148T1	REC48752T	REC324351
1400 (140 HP) (6-Cyl.)	1978-81	USA	4865678 +		REC46-60367A1		REC47-89984T4	REC47-89984Q5	REC46-96148T1	REC48752T	REC324351
1400 (140 HP) (6-Cyl.)	1978-81	AUS	8052650 +		REC46-60367A1		REC47-89984T4	REC47-89984Q5	REC46-96148T1	REC48752T	REC324351
1400 (140 HP) (6-Cyl.)	1978-81	CAN	7112773 +		REC46-60367A1		REC47-89984T4	REC47-89984Q5	REC46-96148T1	REC48752T	REC324351
1500 (6-Cyl.)	1973-77	USA	3502806-4121434		REC46-60367A1		REC47-89984T4	REC47-89984Q5	REC46-96148T1	REC48752T	REC324351
1500 (6-Cyl.)	1973-77	AUS	8005615-8028039		REC46-60367A1		REC47-89984T4	REC47-89984Q5	REC46-96148T1	REC48752T	REC324351
1500 (6-Cyl.)	1973-77	CAN	7010533-7048782		REC46-60367A1		REC47-89984T4	REC47-89984Q5	REC46-96148T1	REC48752T	REC324351

MODELO MODEL MODELLO	AÑO YEAR ANNO	PAIS COUNTRY PAESE	SERIE SERIAL SERIE	KIT BOMBA PUMP KIT KIT POMPA	KIT SUP. UPPER KIT KIT SUP.	BASE BASE BASE	IMPULSOR IMPELLER GIRANTE	KIT IMPULSOR IMPELLER KIT KIT GIRANTE	CUERPO HOUSING CORPO	ACOPLE INOX. PUMP CUP CAPPUCIO INOX.	TAPA WEAR PLATE COPERCHIO
1500 (6-Cyl.) (9)	1973-77	USA	4121435-4865677		REC46-60367A1		REC47-89984T4	REC47-89984Q5	REC46-96148T1	REC48752T	REC324351
1500 (6-Cyl.) (9)	1973-77	AUS	8028040-8052649		REC46-60367A1		REC47-89984T4	REC47-89984Q5	REC46-96148T1	REC48752T	REC324351
1500 (6-Cyl.) (9)	1973-77	CAN	7048783-7112772		REC46-60367A1		REC47-89984T4	REC47-89984Q5	REC46-96148T1	REC48752T	REC324351
1500 (6-Cyl.) (10)	1973-77	USA	4121435-4865677		REC46-60367A1		REC47-89984T4	REC47-89984Q5	REC46-96148T1	REC48752T	REC324351
1500 (6-Cyl.) (10)	1973-77	AUS	8028040-8052649		REC46-60367A1		REC47-89984T4	REC47-89984Q5	REC46-96148T1	REC48752T	REC324351
1500 (6-Cyl.) (10)	1973-77	CAN	7048783-7112772		REC46-60367A1		REC47-89984T4	REC47-89984Q5	REC46-96148T1	REC48752T	REC324351
1500 XS (6-Cyl.)	1978	USA	4868648-5327662		REC46-60367A1		REC47-89984T4	REC47-89984Q5	REC46-96148T1	REC48752T	REC324351
V-135 Carb.	1986-88	USA	0A904646 +		REC46-60367A1	REC46-8M0077147	REC47-89984T4	REC47-89984Q5	REC46-96148T1	REC48752T	REC324351
V-135 DFI	1998	USA	0G590000 +		REC46-60367A1	REC46-8M0077147	REC47-89984T4	REC47-89984Q5	REC46-96148T1	REC48752T	REC324351
140 Jet	1994-95	USA	0D082000 +		REC46-60367A1	REC46-8M0077147	REC47-89984T4	REC47-89984Q5	REC46-96148T1	REC48752T	REC324351
140 Jet	1994-95	BEL	9682500 +		REC46-60367A1	REC46-8M0077147	REC47-89984T4	REC47-89984Q5	REC46-96148T1	REC48752T	REC324351
V-150 Carb. (8)	1978-85	USA	4868998-0A904645		REC46-60367A1	REC46-96146A6	REC47-89984T4	REC47-89984Q5	REC46-96148T1	REC48752T	REC324351
V-150 Carb. (7)	1978-85	USA	4868998-0A904645		REC46-60367A1	REC46-8M0077147	REC47-89984T4	REC47-89984Q5	REC46-96148T1	REC48752T	REC324351
V-150 Carb. EFI & DFI	1986-88	USA	0A904646 +		REC46-60367A1	REC46-8M0077147	REC47-89984T4	REC47-89984Q5	REC46-96148T1	REC48752T	REC324351
V-150 XR2, 4, 6, Mag.II, III (8)	1978-88	USA	4868998 +		REC46-60367A1	REC46-96146A6	REC47-89984T4	REC47-89984Q5	REC46-96148T1	REC48752T	REC324351
V-150 XR2, 4, 6, Mag.II, III (7)	1978-88	USA	4868998 +		REC46-60367A1	REC46-8M0077147	REC47-89984T4	REC47-89984Q5	REC46-96148T1	REC48752T	REC324351
V-1750, 175 (8)	1976-81	USA	4301235-6618750		REC46-60367A1	REC46-96146A6	REC47-89984T4	REC47-89984Q5	REC46-96148T1	REC48752T	REC324351
V-1750, 175 (8)	1980-81	AUS	8064250 +		REC46-60367A1	REC46-96146A6	REC47-89984T4	REC47-89984Q5	REC46-96148T1	REC48752T	REC324351
V-1750, 175 (7)	1976-81	USA	4301235-6618750		REC46-60367A1	REC46-8M0077147	REC47-89984T4	REC47-89984Q5	REC46-96148T1	REC48752T	REC324351
V-1750, 175 (7)	1980-81	AUS	8064250 +		REC46-60367A1	REC46-8M0077147	REC47-89984T4	REC47-89984Q5	REC46-96148T1	REC48752T	REC324351
V-175 Carb., EFI & DFI	1985-88	USA	6618751 +		REC46-60367A1	REC46-8M0077147	REC47-89984T4	REC47-89984Q5	REC46-96148T1	REC48752T	REC324351
V-200 (8)	1978-84	USA	4839034-6625220		REC46-60367A1	REC46-96146A6	REC47-89984T4	REC47-89984Q5	REC46-96148T1	REC48752T	REC324351
V-200 (8)	1980-81	AUS	8061595-8065672		REC46-60367A1	REC46-96146A6	REC47-89984T4	REC47-89984Q5	REC46-96148T1	REC48752T	REC324351
V-200 (7)	1978-84	USA	4839034-6625220		REC46-60367A1	REC46-8M0077147	REC47-89984T4	REC47-89984Q5	REC46-96148T1	REC48752T	REC324351
V-200 (7)	1980-81	AUS	8061595-8065672		REC46-60367A1	REC46-8M0077147	REC47-89984T4	REC47-89984Q5	REC46-96148T1	REC48752T	REC324351
V-200 Carb. & EFI (2.5L)	1985-88	USA	6625221 +		REC46-60367A1	REC46-8M0077147	REC47-89984T4	REC47-89984Q5	REC46-96148T1	REC48752T	REC324351
V-200 EFI (3.0L)		USA	0T750164 +	REC817275A6		REC807929A1	REC47-43026Q02	REC47-43026Q06	REC817275A1		REC8172761
V-200 DFI (3.0L)	1997	USA	0G386496-0G589999		REC817275A6	REC807929A1	REC47-43026Q02	REC47-43026Q06	REC817275A1		REC8172761
V-200 DFI (3.0L)	1998	USA	0G590000 +			REC807929A1	REC47-43026Q02	REC47-43026Q06	REC817275A1		REC8172761
V-220 Laser	1987-88	USA	0B117316 +		REC46-60367A1	REC46-8M0077147	REC47-89984T4	REC47-89984Q5	REC46-96148T1	REC48752T	REC324351
V-225 (2.4L) (8)	1980-81	USA	5628028 +		REC46-60367A1	REC46-96146A6	REC47-89984T4	REC47-89984Q5	REC46-96148T1	REC48752T	REC324351
V-225 (2.4L) (7)	1980-81	USA	5628028 +		REC46-60367A1	REC46-8M0077147	REC47-89984T4	REC47-89984Q5	REC46-96148T1	REC48752T	REC324351
V-225 (3.0L) Carb. & EFI	1994-98	USA	0D280813 +			REC807929A1	REC47-43026Q02	REC47-43026Q06	REC817275A1		REC8172761
V-225 DFI	1998	USA	0G590000 +			REC807929A1	REC47-43026Q02	REC47-43026Q06	REC817275A1		REC8172761
V-250 (3.0L) EFI	1995-98	USA	0G129222 +			REC807929A1	REC47-43026Q02	REC47-43026Q06	REC817275A1		REC8172761
MARK 5	-		574128-786612				REC47-22748				
MARK 6, 6A	-		888005 +				REC47-22748				
MARK 50	-		Todas / All / Tutti				REC47-89983T				
MARK 55	-		831021 +				REC47-89983T				
MARK 55A	-		1227131 +				REC47-89983T				
MARK 58 (E)	-		1139538 +				REC47-89983T				

GUÍA BOMBAS AGUA
WATER PUMP GUIDE
GUIDA POMPA ACQUA

MARINER

MODELO MODEL MODELLO	CÓDIGO CODE CÓDICE	SERIE SERIAL SERIE	IMPULSOR IMPELLER GIRANTE	ACOPLE INOX. PUMP CUP CAPPUCIO INOX	KIT BOMBA PUMP SET KIT POMPA	KIT COMPLETO COMPLET SET KIT COMPLETO
2A	646	Todas / All / Tutti	**REC646-44352-01**			
2B	6A1	Todas / All / Tutti	**REC646-44352-01**			
4A	6,00E+000	Todas / All / Tutti	**REC6E0-44352-00**			
5C	6,00E+003	Todas / All / Tutti	**REC6E0-44352-00**			
6C	6H8	Todas / All / Tutti	**REC6G1-44352-00**			
6D	6H6	Todas / All / Tutti	**REC6G1-44352-00**			
8A(M)	655	000000-000300	**REC662-44352-01**			
8A(ML)	655	000000-300101	**REC662-44352-01**			
8B(M)	677	000101 +	**REC662-44352-01**			
8B(ML)	677	300101 +	**REC662-44352-01**			

MODELO MODEL MODELLO	CÓDIGO CODE CÓDICE	SERIE SERIAL SERIE	IMPULSOR IMPELLER GIRANTE	ACOPLE INOX. PUMP CUP CAPPUCIO INOX	KIT BOMBA PUMP SET KIT POMPA	KIT COMPLETO COMPLET SET KIT COMPLETO
8C	6G1	Todas / All / Tutti	REC6G1-44352-00			
9.9C	682	Todas / All / Tutti	REC682-44352-01		REC682-W0078-A1	
15A(M)	651	- 000285	REC662-44352-01			
15A(ML)	651	- 3000100	REC662-44352-01			
15C	684	Todas / All / Tutti	REC682-44352-01		REC682-W0078-A1	
20C(M)	6A9	000101-005810	REC689-44352-02		REC689-W0078-04	
20C(ML)	6A9	300101-306542	REC689-44352-02		REC689-W0078-04	
20C(E)	6A9	250101-250819	REC689-44352-02		REC689-W0078-04	
20C(EL)	6A9	550101-550693	REC689-44352-02		REC689-W0078-04	
20C(M)	6A9	010112 +	REC689-44352-02	REC689-W4432-01		REC689-W0078-A6
20C(ML)	6A9	306543 +	REC689-44352-02	REC689-W4432-01		REC689-W0078-A6
20C(E)	6A9	250820 +	REC689-44352-02	REC689-W4432-01		REC689-W0078-A6
20C(EL)	6A9	550694 +	REC689-44352-02	REC689-W4432-01		REC689-W0078-A6
25C(M)	695	000101-014870	REC689-44352-02			REC689-W0078-A6
25C(ML)	695	000000-312185	REC689-44352-02			REC689-W0078-A6
25C(E)	695	000000-252290	REC689-44352-02			REC689-W0078-A6
25C(EL)	695	000000-553575	REC689-44352-02			REC689-W0078-A6
25C(M)	695	014871 +	REC689-44352-02	REC689-W4432-01		REC689-W0078-A6
25C(ML)	695	312186 +	REC689-44352-02	REC689-W4432-01		REC689-W0078-A6
25C(E)	695	252291 +	REC689-44352-02	REC689-W4432-01		REC689-W0078-A6
25C(EL)	695	553576 +	REC689-44352-02	REC689-W4432-01		REC689-W0078-A6
28	664	Todas / All / Tutti	REC689-44352-02			
30	689	Todas / All / Tutti	REC689-44352-02			
30A(M)	689	000366-014805	REC689-44352-02			REC689-W0078-A6
30A(ML)	689	301911-315315	REC689-44352-02			REC689-W0078-A6
30A(E)	689	100251-103275	REC689-44352-02			REC689-W0078-A6
30A(EL)	689	401216-407815	REC689-44352-02			REC689-W0078-A6
30A(M)	689	022059 +	REC689-44352-02	REC689-W4432-01		REC689-W0078-A6
30A(ML)	689	321377 +	REC689-44352-02	REC689-W4432-01		REC689-W0078-A6
30A(E)	689	105325 +	REC689-44352-02	REC689-W4432-01		REC689-W0078-A6
30A(EL)	689	411947 +	REC689-44352-02	REC689-W4432-01		REC689-W0078-A6
48/48W	670	Todas / All / Tutti	REC6H3-44352-00	REC663-44322-00	REC663-W0078-01	
55/W55	663	Todas / All / Tutti	REC6H3-44352-00	REC663-44322-00	REC663-W0078-01	
60	675, 6F0	Todas / All / Tutti	REC6H3-44352-00	REC663-44322-00	REC663-W0078-01	

KITS RETENES
SEAL KIT
KIT TENUTE

Ref.	R.O.
REC26-77066A1	26-77066A1

MOTORES / ENGINES / MOTORI
4 / 4.5 / 45 (1 cyl)
7.5 / 9.8 HP

Ref.	R.O.
REC26-41365A3	26-41365A3

MOTORES / ENGINES / MOTORI
6 - 15 HP
(2 & 4 Tiempos / 2 & 4 Strokes / 2 & 4 Tempi)

Ref.	R.O.
REC26-85090A2	26-85090A2

MOTORES / ENGINES / MOTORI
8 - 55 HP
(2 & 4 Tiempos / 2 & 4 Strokes / 2 & 4 Tempi)

Ref.	R.O.
REC26-85090A1	26-85090A1

MOTORES / ENGINES / MOTORI
18 / 25 HP

Ref.	R.O.
REC823547A2	823547A2

MOTORES / ENGINES / MOTORI
25 - 50 HP
(2 & 4 Tiempos / 2 & 4 Strokes / 2 & 4 Tempi)

Ref.	R.O.
REC26-814669A2	26-814669A2

MOTORES / ENGINES / MOTORI
30 - 60 HP
(2 & 4 Tiempos / 2 & 4 Strokes / 2 & 4 Tempi)

Ref.	R.O.
REC26-79831A1	26-79831A1

MOTORES / ENGINES / MOTORI
30 Jet
35 - 70 HP

Ref.	R.O.
REC26-43035A4	26-43035A4

MOTORES / ENGINES / MOTORI
30 - 125 HP
(2 & 4 Tiempos / 2 & 4 Strokes / 2 & 4 Tempi)

Ref.	R.O.
REC26-820645A1	26-820645A1

MOTORES / ENGINES / MOTORI
40 / 50 HP (1992-94)

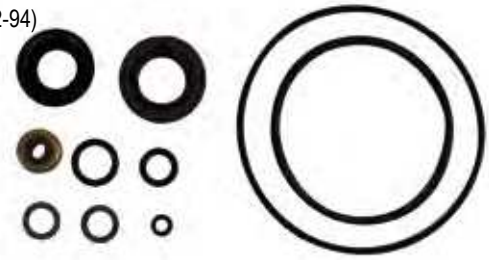

Ref.	R.O.
REC26-55682A1	26-55682A1

MOTORES / ENGINES / MOTORI
75 - V225 HP

Ref.	R.O.
REC26-89238A2	26-89238A2

MOTORES / ENGINES / MOTORI
105 / 140 Jet
150 / 1475 ProXS
V-115 - V-220 (EFI / DFI)
XR-4 / XR-6

Ref.	R.O.
REC26-66303A1	26-66303A1

MOTORES / ENGINES / MOTORI
200 / 20 HP

Ref.	R.O.
REC26-816575A5	26-816575A5

MOTORES / ENGINES / MOTORI
200 - 250 HP (DFI / EFI) (3.0L)
Race Outboard (3.0L EFI)

Ref.	R.O.
REC26-816575A4	26-816575A4

MOTORES / ENGINES / MOTORI
200 - 250 HP (DFI / EFI)
Race Outboard 225 - 300 (2.5 & 3.0L)

GUÍA KITS RETENES COLA
GEARCASE SEAL KITS APPLICATION
GUIDA KIT TENUTE PIEDE

MODELO MODEL MODELLO	PAÍS COUNTRY PAESE	SERIE SERIAL SERIE	KIT
4 (1 cyl.)	USA	5595532 - 0A809600	REC26-77066A1
	BEL	9258281 - 9477829	REC26-77066A1
4.5 (1 cyl.)	USA	4107220 +	REC26-77066A1
	BEL	9072179 +	REC26-77066A1
6	USA	0A197112 +	REC26-41365A3
	BEL	9461526 +	REC26-41365A3
7.5 (7.5, 75)	USA	4851693 +	REC26-77066A1
	BEL	9181726 +	REC26-77066A1
8	USA	0A197112 +	REC26-41365A3
	BEL	9461526 +	REC26-41365A3
8 Bodense 4 Tiempos / 4 Strokes / 4 Tempi	USA	0H00058 - 0H017349	REC26-41365A3
8 Bodense 4 Tiempos / 4 Strokes / 4 Tempi	USA	0G760300 +	REC26-41365A3
9.8 (9.8, 110)	USA	4839254 +	REC26-77066A1
	BEL	9165303 +	REC26-77066A1
9.9	USA	0A197112 +	REC26-41365A3
	BEL	9461526 +	REC26-41365A3
9.9 4 Tiempos / 4 Strokes / 4 Tempi	USA	0H00058 - 0H017349	REC26-41365A3
9.9 4 Tiempos / 4 Strokes / 4 Tempi	USA	0G760300 +	REC26-41365A3
10 (XR10/SEA PRO 10)	USA	0D038000 +	REC26-41365A3
	BEL	9596000 +	REC26-41365A3
10 Magnum / Marathon	USA	0D038000 +	REC26-41365A3
	BEL	9596000 +	REC26-41365A3
15 (15, 15 Sea Pro / Marathon)	USA	0B292414 +	REC26-41365A3
	BEL	9927000 +	REC26-41365A3
15 XD Sea Pro / Marathon	BEL	9927000 +	REC26-85090A2
15 (Super 15)	USA	0B238464 +	REC26-85090A2
	BEL	9507381 +	REC26-85090A2
18	USA	5837437 - 6443972	REC26-85090A1
	BEL	9308306 - 9415100	REC26-85090A1
18 (18XD)	USA	6443973 +	REC26-85090A2
	BEL	9378151 +	REC26-85090A2
20 (20, 200)	USA	4709593 - 6443972	REC26-66303A1
	BEL	9157230 - 9415100	REC26-66303A1
20 (20, 20XD)	USA	6443973 +	REC26-85090A2
	BEL	9415101 +	REC26-85090A2
25	USA	5705532 - 6443972	REC26-85090A1
	BEL	9315316 - 9415100	REC26-85090A1
25 (25, 25XD)	USA	6416713 +	REC26-85090A2
	BEL	9378116 +	REC26-85090A2
25 LIGHTNING (3 cyl.)	USA	0E268781 +	REC26-85090A2
25 4 Tiempos / 4 Strokes / 4 Tempi	USA	0G590000 +	REC823547A2
30 (2 cyl.) (644cc)	USA	0G053314 +	REC823547A2
35 (2 cyl.)	USA	6445653 +	REC26-79831A1
	BEL	9384476 +	REC26-79831A1
40 (40, 402) (2 cyl.)	USA	4860103 - 0G053313	REC26-79831A1
	BEL	9184451 +	REC26-79831A1
40 (2 cyl.) (644cc)	USA	0G053314 +	REC823547A2
40 (4 cyl.)	USA	0C159200 +	REC26-79831A1
	BEL	9570790 +	REC26-79831A1
40 (3 cyl.)	USA	0G531301 +	REC823547A2
	BEL	9973100 +	REC823547A2
40 4-Tiempos / Strokes / Tempi (No Big Foot)	USA	0G231123 +	REC823547A2
45 (4 cyl.)	USA	5531630 +	REC26-79831A1
	BEL	9248006 +	REC26-79831A1
45 BODENSEE (No Big Foot) 4-Tiempos / Strokes / Tempi	USA	0G231123 +	REC823547A2
50 (500) (4 cyl.)	USA	4357640 +	REC26-79831A1
	BEL	9107214 +	REC26-79831A1
50 (3 cyl.)	USA	6428681 - 0D000749	REC26-79831A1
	BEL	9385911 - 9683054	REC26-79831A1

MODELO MODEL MODELLO	PAÍS COUNTRY PAESE	SERIE SERIAL SERIE	KIT
50 (3 cyl.)	USA	0D000750 - 0G589999	REC26-814669A2
	BEL	9683055 - 9973099	REC26-814669A2
50 (3 cyl.)	USA	0G590000 +	REC823547A2
	BEL	9973100 +	REC823547A2
50 (No Big Foot) 4-Tiempos / Strokes / Tempi	USA	0G231123 +	REC823547A2
50 (Big Foot) 4-Tiempos / Strokes / Tempi	USA	0G231123 +	REC26-43035A4
55 (3 cyl.)	USA	0D000750 +	REC26-814669A2
	BEL	9683055 +	REC26-814669A2
60 (3 cyl.)	USA	6428681 - 0D000749	REC26-79831A1
	BEL	9385911 - 9683054	REC26-79831A1
60 (3 cyl.) (No Big Foot)	USA	0D000750 +	REC26-814669A2
	BEL	9683055 +	REC26-814669A2
60 (3 cyl.) (Big Foot)	USA	0D000750 +	REC26-43035A4
	BEL	9683055 +	REC26-43035A4
70 (3 cyl.)	USA	4571652 - 0A996141	REC26-79831A1
	BEL	9135825 - 9385910	REC26-79831A1
70 (3 cyl.)	USA	0A996142 +	REC26-43035A4
	BEL	9483121 +	REC26-43035A4
75 (3 cyl.)	USA	0C222000 +	REC26-43035A4
	BEL	9589039 +	REC26-43035A4
75 (4 cyl.)	USA	6432901 +	REC26-55682A1
	BEL	9393856 +	REC26-55682A1
80 (80, 800) (4 cyl.)	USA	4831999 - 6432900	REC26-55682A1
	BEL	9177626 - 9393855	REC26-55682A1
80 (3 cyl.)	USA	0A996142 +	REC26-43035A4
	BEL	9483121 +	REC26-43035A4
90 (90, 900) (6 cyl.)	USA	4845301 +	REC26-55682A1
90 (3 cyl.)	USA	0A996142 +	REC26-43035A4
	BEL	9483121 +	REC26-43035A4
100 (4 cyl.)	USA	0B209468 +	REC26-43035A4
	BEL	9523034 +	REC26-43035A4
115 (115, 1150) (6 cyl.)	USA	4855153 +	REC26-55682A1
115 (4 cyl.)	USA	0C100000 +	REC26-43035A4
	BEL	9559771 +	REC26-43035A4
125 (4 cyl.)	USA	0D283222 +	REC26-43035A4
	BEL	9793577 +	REC26-43035A4
140 (140, 1400) (6 cyl.)	USA	4865678 +	REC26-55682A1
V-135	USA	0A904646 - 0C239552	REC26-89238A2
V-135	USA	0C239553 +	REC26-89238A2
V-135 DFI	USA	0G590000 +	REC26-89238A2
V-150 (150, 1500)	USA	4868998 - 0A904645	REC26-55682A1
V-150 (CARB)	USA	0A904646 +	REC26-89238A2
V-150 (XR4/MAGNUM II)	USA	0B242885 - 0C239552	REC26-89238A2
V-150 (XR4)	USA	0C239553 - 0D081999	REC26-89238A2
V-150 (XR6/MAGNUM III)	USA	0D082000 +	REC26-89238A2
V-150 EFI	USA	0D082000 +	REC26-89238A2
V-150 DFI	USA	0G590000 +	REC26-89238A2
V-175 (175, 1750)	USA	4301235 - 6618750	REC26-55682A1
V-175 (CARB, EFI)	USA	6618751 +	REC26-89238A2
V-200 (200, 2000)	USA	4839034 - 6625220	REC26-55682A1
V-200 (CARB, EFI)	USA	6625221 - 6203990	REC26-89238A2
V-200 DFI (3.0L)	USA	0G386496 +	REC26-816575A5
V-220	USA	0B117316 +	REC26-89238A2
V-225	USA	5628028 +	REC26-55682A1
V-225 (3.0L) (C-2)	USA	0D280813 +	REC26-816575A5
V-225 (3.0L) (C-3)	USA	0D280813 +	REC26-816575A4
V-225 (3.0L) (Sea Pro, Marathon) (C-2)	USA	0G245605 +	REC26-816575A5
V-225 (3.0L) (Sea Pro, Marathon) (C-3)	USA	0G245605 +	REC26-816575A4
V-225 EFI (3.0L)	USA	0G129222 +	REC26-816575A5
V-225 DFI (3.0L)	USA	0G590000 +	REC26-816575A5
V-250 EFI (3.0L)	USA	0G129222 +	REC26-816575A5

GUÍA RETENES ACEITE
OIL SEAL APPLICATION
GUIDA KIT PARAOLIO

MODELO MODEL MODELLO	SERIE SERIAL SERIE	INTERIOR HÉLICE INNER PROP INTERNO ÉLICA	EXTERIOR HÉLICE OUTTER PROP ESTERNO ÉLICA	BASE BOMBA SUPERIOR UPPER WATER PUMP BASE POMPA SUPERIORE	BASE BOMBA INFERIOR LOWER WATER PUMP BASE POMPA INFERIORE	CUERPO BOMBA PUMP HOUSTING CORPO POMPA	EJE CAMBIO SHIFT SHAFT ASSE CAMBIO
3.5,3.6	5404657 +			REC26-897153		REC26-30913	
3.9	1655013 - 2498135					REC26-30913	
4	2498136 - 5569201					REC26-30913	
4	5569202 - 5595531			REC26-897153		REC26-30913	
4,4.5	5595532 - A809601			REC26-897153		REC26-30913	
6	1408611 - 2529894					REC26-30913	
7.5	2529895 - 3801457					REC26-30913	
7.5	3801458 - 5206549					REC26-30913	
7.5	5206550 +			REC26-897153		REC26-30913	
9.8	1470349 - 3795657					REC26-30913	
9.8	3795658 - 5206549					REC26-30913	
9.8	5206550 +			REC26-897153		REC26-30913	
18	5837437 - 6443972			REC26-33467	REC26-33467		
20	1558310 - 1866494			REC26-33467		REC908855	
20	1866495 - 6443972			REC908855	REC26-33467	REC908855	
25	5705532 - 6443972			REC26-33467	REC26-33467		
30	1271885 - 1356947	REC26-90562		REC26-90562			REC26-8164641
30	G055314 +	REC26-69188	REC26-69189				
MK35A	1217222 - 1271884	REC26-90562	REC26-90562				REC26-8164641
35	1356948 - 1448139	REC26-90562		REC26-90562			REC26-8164641
35	1571114 - 1960826	REC26-90562		REC26-90562			REC26-8164641
35	1960827 - 2874703	REC26-90562		REC26-90562	REC26-79831		REC26-8164641
35	6445653 +	REC26-69188		REC26-90562	REC26-79831		REC26-8164641
40	1279685 - 2874703	REC26-90562		REC26-90562			REC26-8164641
40	2874704 - 3336257	REC26-56788		REC26-90562	REC26-79831		REC26-8164641
40	3338258 - 4117709	REC26-56788		REC26-90562	REC26-79831		REC26-24590
40	4117710 - 4860102	REC26-69188	REC26-69189	REC26-90562	REC26-79831		REC26-8164641/ REC26-24590
40	4880103 - 6445652	REC26-69188	REC26-69189	REC26-90562	REC26-79831		REC26-8164641
40 (4 Cyl)	C159200 - G053313	REC26-69188	REC26-69189	REC26-90562	REC26-79831		REC26-8164641
40 (2 Cyl)	G055314 +	REC26-69188	REC26-69189				
45	1476510 - 1531568	REC26-90562		REC26-90562			REC26-8164641
45 (4 Cyl)	5531630 +	REC26-69188	REC26-69189	REC26-90562	REC26-79831		REC26-8164641
50	1421113 - 1639472	REC26-90562		REC26-90562			REC26-8164641
50	1639473 - 1770178	REC26-90562		REC26-90562			REC26-8164641
50	1770179 - 2305100	REC26-90562		REC26-90562	REC26-79831		REC26-8164641
50	2305101 - 2858813	REC26-90562		REC26-90562	REC26-79831		REC26-24590
50	2858814 - 4140999	REC26-56788		REC26-90562	REC26-79831		REC26-8164641/ REC26-24590
50	4141000 - 4962055	REC26-69188	REC26-69189	REC26-90562	REC26-79831		REC26-8164641/ REC26-24590
50	4962056 - 5531630	REC26-69188	REC26-69189	REC26-90562	REC26-79831		REC26-8164641
50 (3 Cyl)	6428681 - D000750	REC26-69188	REC26-69189	REC26-90562	REC26-79831		REC26-8164641
50-60 (3 C)	D00075 +	REC26-69188	REC26-69189			REC26-8164641	
60	1303411 - 1542744			REC26-90562			
60	6428681 - D000750	REC26-69188	REC26-69189	REC26-90562	REC26-79831		REC26-8164641
65	1542745 - 2874263	REC26-76868	REC26-76868	REC26-94038		REC26-16977	REC26-8164641
65	2874263 - 3293183	REC26-76868		REC26-94038	REC26-55682	REC26-16977	REC26-8164641/ REC26-24590
65 (3 Cyl)	3293164 - 4138684	REC26-56788		REC26-90562	REC26-79831		REC26-8164641/ REC26-24590
65 (3 Cyl)	4136685 - 4571651	REC26-69188	REC26-69189	REC26-90562	REC26-79831		REC26-8164641/ REC26-24590
70	1296411 - 1413610	REC26-90562					
70	1413811 - 1566239	REC26-76868	REC26-76868	REC26-94038		REC26-16977	REC26-8164641
70 (3 Cyl)	4571652 - 4977156	REC26-69188	REC26-69189	REC26-90562	REC26-79831		REC26-8164641/ REC26-24590
70 (3 Cyl)	4977157 - 5579016	REC26-69188	REC26-76127	REC26-90562	REC26-79831		REC26-8164641
70 (3 Cyl	5679017 - A996142	REC26-69188		REC26-90562	REC26-79831		REC26-8164641
70,75 (3 C)	A996142 +	REC26-76868	REC26-70081		REC26-43036		
75 (4 Cyl)	6432901 - A996142	REC26-76868	REC26-70081	REC26-16977	REC26-94038		REC26-8164641
80	1335465 - 1398629	REC26-76868	REC26-76868	REC26-94038		REC26-16977	REC26-8164641
80	1398630 - 1566239	REC26-76868	REC26-76868	REC26-94038		REC26-16977	REC26-8164641
80 (4 Cyl)	2559001 - 3144218	REC26-76868	REC26-76868	REC26-16977	REC26-94038	REC26-16977	REC26-8164641/ REC26-24590

MODELO MODEL MODELLO	SERIE SERIAL SERIE	INTERIOR HÉLICE INNER PROP INTERNO ÉLICA	EXTERIOR HÉLICE OUTTER PROP ESTERNO ÉLICA	BASE BOMBA SUPERIOR UPPER WATER PUMP BASE POMPA SUPERIORE	BASE BOMBA INFERIOR LOWER WATER PUMP BASE POMPA INFERIORE	CUERPO BOMBA PUMP HOUSTING CORPO POMPA	EJE CAMBIO SHIFT SHAFT ASSE CAMBIO
80 (4 Cyl)	3144219 - 4831998	REC26-76868	REC26-76868	REC26-55682	REC26-94038	REC26-16977	REC26-8164641/ REC26-24590
80 (4 Cyl)	4831999 - 5582561	REC26-76868	REC26-76868	REC26-16977	REC26-94038		REC26-8164641
80 (4 Cyl)	5582562 - A996142	REC26-76868	REC26-70081	REC26-16977	REC26-94038		REC26-8164641
80 (3 Cyl)	A996142 +	REC26-76868	REC26-70081		REC26-43036		
85	1460999 - 1766823	REC26-76868	REC26-76868	REC26-94038		REC26-16977	REC26-8164641
85 (4 Cyl)	3493913 - 4590511	REC26-76868	REC26-76868	REC26-55682	REC26-94038		REC26-8164641/ REC26-24590
85 (4 Cyl)	4590512 - 4831998	REC26-76868	REC26-76868	REC26-16977	REC26-94038		REC26-8164641/ REC26-24590
90	1766824 - 1869775	REC26-76868	REC26-76868	REC26-16977	REC26-94038	REC26-16977	REC26-8164641
90	4845301 - 5594856	REC26-76868	REC26-76868	REC26-16977	REC26-94038		REC26-8164641
90	5594657 - A996142	REC26-76868	REC26-70081	REC26-16977	REC26-94038		REC26-8164641
90 (3 Cyl)	A996142 +	REC26-76868	REC26-70081		REC26-43036		
95	1869776 - 2318585	REC26-76868	REC26-76868	REC26-16977	REC26-94038	REC26-16977	REC26-8164641/ REC26-24590
100, 100SS	1464949 - 2836018	REC26-76868	REC26-76868	REC26-16977	REC26-94038	REC26-16977	REC26-8164641
100BP	2399698 - 2641854	REC26-76868	REC26-76868	REC26-16977	REC26-94038	REC26-16977	REC26-8164641/ REC26-24590
100 (4 Cyl)	B209468 +	REC26-76868	REC26-70081		REC26-43036		
110	1870204 - 2314955	REC26-76868	REC26-76868	REC26-16977	REC26-94038	REC26-16977	REC26-8164641/ REC26-24590
115	2836019 - 3525440	REC26-76868	REC26-76868	REC26-16977	REC26-94038	REC26-16977	REC26-8164641/ REC26-24590
115	3525440 - 4122634	REC26-76868	REC26-76868	REC26-16977		REC26-8164641	REC26-90562/ REC26-24590
115	4122635 - 4855152	REC26-76868	REC26-76868	REC26-16977	REC26-94038		REC26-8164641/ REC26-24590
115	4855153 - 5600966	REC26-76868	REC26-76868	REC26-16977	REC26-94038		REC26-8164641
115	5600967 - C100000	REC26-76868	REC26-70081	REC26-16977	REC26-94038		REC26-8164641
115 (4 Cyl)	C100000 +	REC26-76868	REC26-70081		REC26-43036		
125	2314956 - 2839368	REC26-76868	REC26-76868	REC26-16977	REC26-94038	REC26-16977	REC26-8164641
135	2839369 - 3293233	REC26-76868	REC26-76868	REC26-16977	REC26-94038	REC26-16977	REC26-8164641
140	3293234 - 3502805	REC26-76868	REC26-76868	REC26-16977	REC26-94038	REC26-16977	REC26-8164641/ REC26-24590
140	4865678 +	REC26-76868	REC26-76868	REC26-16977	REC26-94038		REC26-8164641
150	3502806 - 4121434	REC26-76868	REC26-76868	REC26-16977	REC26-94038		REC26-8164641/ REC26-24590
150	4121434 - 5327662	REC26-76868	REC26-76868	REC26-16977	REC26-94038		REC26-8164641/ REC26-24590
150/150XR2	4868998 - 5432021	REC26-76868	REC26-76868	REC26-16977	REC26-89238		REC26-8164641
150/150XRS	5432021 - A904646	REC26-76868	REC26-76868	REC26-16977	REC26-89238		REC26-8164641
150/150XR2	A904646 +	REC26-76868	REC26-76868	REC26-16977	REC26-89238		REC26-8164641
175	4301235 - 6618750	REC26-76868	REC26-76868	REC26-16977	REC26-89238		REC26-8164641
175	6618751 +	REC26-76868	REC26-76868	REC26-16977	REC26-89238		REC26-8164641
200	4839034 - 6073191	REC26-76868	REC26-76868	REC26-16977	REC26-89238		REC26-8164641
200	6073192 +	REC26-76868	REC26-76868	REC26-16977	REC26-89238		REC26-8164641
220	B117316 +	REC26-76868	REC26-76868	REC26-16977	REC26-89238		REC26-8164641
225	5628028 - D280813	REC26-76868	REC26-76868	REC26-16977	REC26-89238		REC26-8164641
250/275	C101891 +	REC26-76868	REC26-76868	REC26-16977	REC26-89238		REC26-8164641
3.4L	5611648 +	REC26-76868	REC26-76868	REC26-16977	REC26-89238		REC26-8164641

COMPONENTES COLA
GEARHOUSING COMPONENTS
COMPONENTI PIEDI

ACOPLE CAMBIO
SHIFT BUSHING
ACCOPPIAMENTO CAMBIO

Ref.	R.O.
REC23-815921A21	23-815921A4 - A10

MOTORES / ENGINES / MOTORI
200 - 250 HP (EFI / DFI / Carb) 3.0L
Race Outboard (3.0L EFI)

ACOPLE GOMA
GROMMET
GOMMINI

Ref.	R.O.
REC26-38970	26-38970

MOTORES / ENGINES / MOTORI
50 - V-225 HP
XR-4 / XR-6
Race Outboard

TORNILLO CON RETÉN
SCREW WITH SEAL
VITI CON PARAOLIO

Ref.	R.O.
REC22-67892A05	22-67892A1

MOTORES / ENGINES / MOTORI
6 HP+
2 & 4 Tiempos / 2 & 4 Strokes / 2 & 4 Tempi

Ref.	R.O.
REC10-79953Q04	10-79953A2

MOTORES / ENGINES / MOTORI
8 - 200 HP
2 & 4 Tiempos / 2 & 4 Strokes / 2 & 4 Tempi
Race Outboard
Sport Jet

CASQUILLO
COUPLING ASSEMBLY
GHIERA

Ref.	R.O.
REC816597A1	816597A1

MOTORES / ENGINES / MOTORI
200 - 225 HP (DFI / EFI / Carb / Seapro)
(3.0L)

RETÉN GOMA
FACE SEAL
PARAOLIO GOMMA

Ref.	R.O.
REC26-816575A2	23-29804

MOTORES / ENGINES / MOTORI
65 - V-225 HP
XR-4 / XR-6

PASADOR
CROSS PIN
CHIAVETTA

Ref.	R.O.
REC17-8M0084681	17-30632

MOTORES / ENGINES / MOTORI
40 - 300 HP
2 & 4 Tiempos / 2 & 4 Strokes / 2 & 4 Tempi
Raco Outboard

CHAVETA
KEY
CHIAVE

REF	R.O. OEM	MOTORES ENGINES MOTORI	TIEMPOS STROKES TEMPI
REC8M0032834	28-56654	140 / 105 / 110 Jet 65 - V-225 HP XR-4 / XR-6 Race Outboard	
REC28-8M0032833	28-43037	30 - 300 HP	2 & 4
REC28-8M0032831	28-8M0032831 28-19699	30 - 60 HP	2 & 4
REC28-8M0032838	28-8M0032838 28-85119	9.9 - 50 HP	2 & 4
REC8M0032837	28-8M0032837 28-56662	30 - 70 HP	2
PAF8-04000021	17-9521811	2 - 9.9 HP	2 & 4
REC28-42376A2	28-42376A2	6 - 15 HP	2 & 4

NEW

MUELLE
SPRING
MOLLA

Ref.	R.O.
REC24-30893	24-30893

MOTORES / ENGINES / MOTORI
40 - 350 HP
2 & 4 Tiempos / 2 & 4 Strokes / 2 & 4 Tempi
Raco Outboard

Ref.	R.O.
REC24-38114	24-38114

NEW

MOTORES / ENGINES / MOTORI
8 - 70 HP
2 & 4 Tiempos / 2 & 4 Strokes / 2 & 4 Tempi

SUPLEMENTOS
SHIMS
SPESSORI

Ref.	R.O.
REC15-42637A1	15-42637A1

MOTORES / ENGINES / MOTORI
105 - 140 HP
150 / 175 ProXS
200 - 250 (3.0L EFI / DFI)
V-135 - V-200
XR-4 / XR-6

Ref.	R.O.
REC15-47397A1	15-47397A1

MOTORES / ENGINES / MOTORI
105 - 140 Jet
135 - 350 HP
V-135 - V-225
XR-4 / XR-6
2 & 4 Tiempos / 2 & 4 Strokes / 2 & 4 Tempi

EJE CAMBIO
SHIFT POOL
ASSE CAMBIO

Ref.	R.O.
REC818349T1	818349A1

MOTORES / ENGINES / MOTORI
200 - 250 HP (DFI / EFI / Carb) (3.0L)

TORNILLO
SCREW
VITE

Ref.	R.O.
REC10-30720	10-30720

MOTORES / ENGINES / MOTORI
65 - V-225 HP
XR-4 / XR-6

Ref.	R.O.
REC10-96411	10-96411

MOTORES / ENGINES / MOTORI
75 - V-225 HP
XR-4 / XR-6
Race Outboard

TUBO AGUA
WATER HOSE
TUBO ACQUA

Ref.	R.O.
REC23-29804T	23-29804

MOTORES / ENGINES / MOTORI
8 - V-200 HP
XR-6
2 & 4 Tiempos / 2 & 4 Strokes / 2 & 4 Tempi

Ref.	R.O.
REC43023	43023

MOTORES / ENGINES / MOTORI
25 - 115 HP
2 & 4 Tiempos / 2 & 4 Strokes / 2 & 4 Tempi

Ref.	R.O.
REC43023-2	43023-2

MOTORES / ENGINES / MOTORI
40 - 115 HP
2 & 4 Tiempos / 2 & 4 Strokes / 2 & 4 Tempi

ARANDELA
WASHER
RONDELLA

Ref.	R.O.
REC12-77674	12-77674

Ref.	R.O.
REC12-86645	12-86645
REC19643	19643
REC12-191833	12-20260, 12-19183

Ref.	R.O.
REC350038	12-92721

MOTORES / ENGINES / MOTORI
80 - 300 HP
2 & 4 Tiempos / 2 & 4 Strokes / 2 & 4 Tempi
Race Outboard

TUERCA HÉLICES
PROP NUT
DADO ÉLICHE

Ref.	R.O.
REC90301-ZW1-003	11-52707

MOTORES / ENGINES / MOTORI
V4 - V6

Ref.	R.O.
REC11-69578Q1	11-69578

MOTORES / ENGINES / MOTORI
40-70 HP

TOPE HÉLICES
THRUST HUB
RONDELLA

Ref.	R.O.
REC13191Q01	13191A1, 75282A1

MOTORES / ENGINES / MOTORI
V4

Ref.	R.O.
REC73345A1	73345A1

MOTORES / ENGINES / MOTORI
40-50 HP

COBRE / BRASS / RAME

Ref.	R.O.
REC12-31211Q01	12-825467, 13171

INOX / SS / INOX

Ref.	R.O.
REC12-835467Q01	13171

TOPE CIERRE HÉLICES
TAB WASHER RECEIVER
RONDELLA CHIUSURA

Ref.	R.O.
REC12-31211Q03	12-31211A2

CIERRE HÉLICES
TAB WASHER
CHIUSURA ELICA

Ref.	R.O.
REC90508-ZW1-003	14-31210

MOTORES / ENGINES / MOTORI
V4 - V6

Ref.	R.O.
REC14-76281Q	14-76281

MOTORES / ENGINES / MOTORI
18-70 HP

Ref.	R.O.
REC13-423511	13-42351-1

KIT CIERRE HÉLICES
PROP NUT KITS
KIT CHIUSURA ELICA

Ref.	R.O.
REC21285	

MOTORES / ENGINES / MOTORI
6 - 15 HP

Ref.	R.O.
REC22215	

MOTORES / ENGINES / MOTORI
6 - 15 HP

Ref.	R.O.
REC13914Q02	11-13914A2

MOTORES / ENGINES / MOTORI
6 - 15 HP

Ref.	R.O.
REC21307	

MOTORES / ENGINES / MOTORI
18 - 25 HP

Ref.	R.O.
REC11-52707Q1	11-52707Q1, 11-52707A1

MOTORES / ENGINES / MOTORI
V4 - V6

Ref.	R.O.
REC11-31990Q02	11-31990A2

MOTORES / ENGINES / MOTORI
30 - 70 HP

GUÍA MANTENIMIENTO
MAINTENANCE GUIDE
GUIDA DI MANUTENZIONE

4 TIEMPOS STROKES

Modelo / Model / Modello	DESCRIPCIÓN	DESCRIPTION	DESCRIZIONE	Unds. / Units / Unità	Ref.
2 2.5 3.5(Carb)	BUJÍA	SPARK PLUG	CANDELE	1	NGKDCPR6E
	TERMOSTATO	THERMOSTAT	TERMOSTATO	1	RM804540
	IMPULSOR	IMPELLER	GIRANTE	1	REC47-161543
	ÁNODO COLA	ANODE DRIVE	ANODO PIEDE	1	CM823913
4 5 6	BUJÍA	SPARK PLUG	CANDELE	1	NGKDCPR6E
	TERMOSTATO	THERMOSTAT	TERMOSTATO	1	RM804540
	IMPULSOR	IMPELLER	GIRANTE	1	REC47-161543
	FILTRO GASOLINA	FUEL FILTER	FILTRO BENZINA	1	PAF4-05000300
	ÁNODO COLA	ANODE DRIVE	ANODO PIEDE	1	TEN00823
8 (Bodensee) (International)	BUJÍA	SPARK PLUG	CANDELE	2	NGKDPR6EA-9
	TERMOSTATO	THERMOSTAT	TERMOSTATO	1	REC825212T02
	IMPULSOR BIG FOOT	IMPELLER BIG FOOT	GIRANTE BIG FOOT	1	REC47-8508910
	IMPULSOR NO BIG FOOT	IMPELLER NOT BIG FOOT	GIRANTE NO BIG FOOT	1	REC47-420382
	FILTRO GASOLINA	FUEL FILTER	FILTRO BENZINA	1	REC35-80365M
	FILTRO ACEITE	OIL FILTER	FILTRO OLIO	1	REC35-822626Q03
	CORREA	BELT	CINGHIE	1	PAF15-07000002
	ÁNODO COLA NO BIG FOOT	ANODE DRIVE NOT BIG FOOT	ANODO PIEDE NON BIG FOOT	1	CM42121A2
	ÁNODO COLA NO BIG FOOT	ANODE DRIVE NOT BIG FOOT	ANODO PIEDE NON BIG FOOT	1	TEN00812
	ÁNODO BLOQUE MOTOR	ANODE ENGINE	ANODO MOTORE	1	PAF15-07010008
8 & 9.9 (209cc)	BUJÍA	SPARK PLUG	CANDELE	2	NGKDCPR6E
	TERMOSTATO	THERMOSTAT	TERMOSTATO	1	RM855676002
	IMPULSOR BIG FOOT	IMPELLER BIG FOOT	GIRANTE BIG FOOT	1	CEF500383
	IMPULSOR NO BIG FOOT	IMPELLER NOT BIG FOOT	GIRANTE NO BIG FOOT	1	CEF500344
	FILTRO GASOLINA	FUEL FILTER	FILTRO BENZINA	1	PAF4-05000300
	CORREA	BELT	CINGHIE	1	PAF8-05000004
	ÁNODO COLA	ANODE DRIVE	ANODO PIEDE	1	CM3V1-60217-0
	ÁNODO TRANSOM	ANODE TRANSOM	ANODO TRANSOM	2	TEN00834
	ÁNODO BLOQUE MOTOR	ANODE ENGINE	ANODO MOTORE	1	TEN00823
9.9 (323cc)	BUJÍA	SPARK PLUG	CANDELE	2	NGKDPR6EA-9
	TERMOSTATO	THERMOSTAT	TERMOSTATO	1	REC825212T02
	IMPULSOR BIG FOOT	IMPELLER BIG FOOT	GIRANTE BIG FOOT	1	REC47-8508910
	IMPULSOR NO BIG FOOT	IMPELLER NOT BIG FOOT	GIRANTE NO BIG FOOT	1	REC47-420382
	FILTRO GASOLINA	FUEL FILTER	FILTRO BENZINA	1	REC35-80365M
	FILTRO ACEITE	OIL FILTER	FILTRO OLIO	1	REC35-822626Q03
	CORREA	BELT	CINGHIE	1	PAF15-07000002
	ÁNODO COLA NO BIG FOOT	ANODE DRIVE NOT BIG FOOT	ANODO PIEDE NON BIG FOOT	1	CM42121A2
	ÁNODO COLA NO BIG FOOT	ANODE DRIVE NOT BIG FOOT	ANODO PIEDE NON BIG FOOT	1	TEN00812
	ÁNODO BLOQUE MOTOR	ANODE ENGINE	ANODO MOTORE	1	PAF15-07010008

Modelo Model Modello	DESCRIPCIÓN	DESCRIPTION	DESCRIZIONE	Unds. Units Unità	Ref.
13.5 & 15 (International)	BUJÍA	SPARK PLUG	CANDELE	2	NGKDPR6EA-9
	TERMOSTATO	THERMOSTAT	TERMOSTATO	1	REC825212T02
	IMPULSOR BIG FOOT	IMPELLER BIG FOOT	GIRANTE BIG FOOT	1	REC47-8508910
	IMPULSOR NO BIG FOOT	IMPELLER NOT BIG FOOT	GIRANTE NO BIG FOOT	1	REC47-420382
	FILTRO GASOLINA	FUEL FILTER	FILTRO BENZINA	1	REC35-80365M
	FILTRO ACEITE	OIL FILTER	FILTRO OLIO	1	REC35-822626Q03
	CORREA	BELT	CINGHIE	1	PAF15-07000002
	ÁNODO COLA NO BIG FOOT	ANODE DRIVE NOT BIG FOOT	ANODO PIEDE NON BIG FOOT	1	CM42121A2
	ÁNODO COLA NO BIG FOOT	ANODE DRIVE NOT BIG FOOT	ANODO PIEDE NON BIG FOOT	1	TEN00812
	ÁNODO BLOQUE MOTOR	ANODE ENGINE	ANODO MOTORE	1	PAF15-07010008
15 Carb (2Cyl) & SEAPRO	BUJÍA	SPARK PLUG	CANDELE	2	NGKDCPR6E
	TERMOSTATO	THERMOSTAT	TERMOSTATO	1	RM855676002
	IMPULSOR	IMPELLER	GIRANTE	1	CEF500383
	FILTRO GASOLINA	FUEL FILTER	FILTRO BENZINA	1	PAF4-05000300
	FILTRO ACEITE	OIL FILTER	FILTRO OLIO	1	REC35-822626Q03
	ÁNODO COLA	ANODE DRIVE	ANODO PIEDE	1	CM3V1-60217-0
	ÁNODO TRANSOM TILT MANUAL	ANODE TRANSOM TILT MANUAL	ANODO TRANSOM TILT MANUAL	1	CM823913
	ÁNODO TRANSOM TILT ELÉCTRICO	ANODE TRANSOM TILT ELECTRIC	ANODO TRANSOM TILT ELETTRICO	2	TEN00834
	ÁNODO BLOQUE MOTOR	ANODE ENGINE	ANODO MOTORE	1	TEN00823
	ÁNODO BLOQUE MOTOR	ANODE ENGINE	ANODO MOTORE	1	PAF15-07010008
20 Carb (2Cyl)	BUJÍA	SPARK PLUG	CANDELE	2	NGKDCPR6E
	TERMOSTATO	THERMOSTAT	TERMOSTATO	1	RM855676002
	IMPULSOR	IMPELLER	GIRANTE	1	CEF500383
	FILTRO GASOLINA	FUEL FILTER	FILTRO BENZINA	1	PAF4-05000300
	FILTRO ACEITE	FUEL FILTER	FILTRO BENZINA	1	REC35-822626Q03
	ÁNODO COLA	ANODE DRIVE	ANODO PIEDE	1	CM3V1-60217-0
	ÁNODO TRANSOM TILT MANUAL	ANODE TRANSOM TILT MANUAL	ANODO TRANSOM TILT MANUAL	1	CM823913
	ÁNODO TRANSOM TILT ELÉCTRICO	ANODE TRANSOM TILT ELECTRIC	ANODO TRANSOM TILT ELETTRICO	2	TEN00834
	ÁNODO BLOQUE MOTOR	ANODE ENGINE	ANODO MOTORE	1	TEN00823
	ÁNODO BLOQUE MOTOR	ANODE ENGINE	ANODO MOTORE	1	PAF15-07010008
25 (4 Tiempos 4 Strokes 4 Tempi)	BUJÍA	SPARK PLUG	CANDELE	2	NGKDPR6EA-9
	TERMOSTATO	THERMOSTAT	TERMOSTATO	1	REC825212T02
	CORREA DISTRIBUCIÓN	TIMMING BELT	CINGHIE DISTRIBUZIONE	1	PAF25-05000023
	IMPULSOR	IMPELLER	GIRANTE	1	REC47-8508910
	FILTRO GASOLINA	FUEL FILTER	FILTRO BENZINA	1	REC35-877565T
	FILTRO ACEITE	OIL FILTER	FILTRO OLIO	1	REC35-822626Q04
	ÁNODO COLA	ANODE DRIVE	ANODO PIEDE	1	CM822157T2
	ÁNODO TRANSOM	ANODE TRANSOM	ANODO TRANSOM	1	CM825271
	ÁNODO BLOQUE MOTOR	ANODE ENGINE	ANODO MOTORE	2	CM826887M
	ÁNODO BLOQUE MOTOR	ANODE ENGINE	ANODO MOTORE	1	PAF15-07010008
30 (4 Tiempos 4 Strokes 4 Tempi)	BUJÍA	SPARK PLUG	CANDELE	3	NGKDPR6EA-9
	TERMOSTATO	THERMOSTAT	TERMOSTATO	1	REC825212T02
	CORREA DISTRIBUCIÓN	TIMMING BELT	CINGHIE DISTRIBUZIONE	1	PAF25-05000023
	IMPULSOR (RATIO 2.31:1)	IMPELLER (RATIO 2.31:1)	GIRANTE (RATIO 2.31:1)	1	REC47-43026Q02
	IMPULSOR (RATIO 2:1)	IMPELLER (RATIO 2:1)	GIRANTE (RATIO 2:1)	1	REC47-8508910
	FILTRO GASOLINA	FUEL FILTER	FILTRO BENZINA	1	REC35-877565T
	FILTRO ACEITE	OIL FILTER	FILTRO OLIO	1	REC35-822626Q04
	ÁNODO COLA TIMÓN (RATIO 2.31:1)	ANODE DRIVE (RATIO 2.31:1)	ANODO PIEDE (RATIO 2.31:1)	1	CM31640
	ÁNODO COLA TIMÓN (RATIO 2:1)	ANODE DRIVE (RATIO 2:1)	ANODO PIEDE (RATIO 2:1)	1	CM822157T2
	ÁNODO COLA	ANODE DRIVE	ANODO PIEDE	2	CM826134
	ÁNODO TRANSOM	ANODE TRANSOM	ANODO TRANSOM	1	CM818298
	ÁNODO BLOQUE MOTOR	ANODE ENGINE	ANODO MOTORE	3	CM826887M
30 Carb (3Cyl)	BUJÍA	SPARK PLUG	CANDELE	3	NGKDPR6EA-9
	TERMOSTATO	THERMOSTAT	TERMOSTATO	1	REC825212T02
	CORREA DISTRIBUCIÓN	TIMMING BELT	CINGHIE DISTRIBUZIONE	1	PAF25-05000023
	IMPULSOR (RATIO 2.31:1 / 2.33:1)	IMPELLER (RATIO 2.31:1 / 2.33:1)	GIRANTE (RATIO 2.31:1 / 2.33:1)	1	REC47-43026Q02
	IMPULSOR RATIO 2:1	IMPELLER (RATIO 2:1)	GIRANTE (RATIO 2:1)	1	REC47-8508910
	FILTRO GASOLINA	FUEL FILTER	FILTRO BENZINA	1	REC35-877565T
	FILTRO ACEITE	OIL FILTER	FILTRO OLIO	1	REC35-822626Q04
	ÁNODO COLA TIMÓN (RATIO 2.31:1 / 2.33:1))	ANODE DRIVE (RATIO 2.31:1 / 2.33:1)	ANODO PIEDE (RATIO 2.31:1 / 2.33:1)	1	CM31640
	ÁNODO COLA TIMÓN (RATIO 2:1)	ANODE DRIVE (RATIO 2:1)	ANODO PIEDE (RATIO 2:1)	1	CM822157T2
	ÁNODO COLA	ANODE DRIVE	ANODO PIEDE	2	CM826134
	ÁNODO TRANSOM	ANODE TRANSOM	ANODO TRANSOM	1	CM818298
30 EFI (3Cyl)	BUJÍA	SPARK PLUG	CANDELE	3	CHARA8HC
	TERMOSTATO	THERMOSTAT	TERMOSTATO	1	REC825212T02
	CORREA DISTRIBUCIÓN	TIMMING BELT	CINGHIE DISTRIBUZIONE	1	PAF25-05000023
	IMPULSOR	IMPELLER	GIRANTE	1	REC47-8508910
	FILTRO GASOLINA LINEA	INLINE FUEL FILTER	FILTRO BENZINA IN LINIA	1	REC35-879885T
	FILTRO GASOLINA ELEMENTO	FUEL FILTER ELEMENT	FILTRO BENZINA, CARTUCCIA	1	PAF15-07080000
	FILTRO ACEITE	OIL FILTER	FILTRO OLIO	1	REC35-822626Q04
	ÁNODO COLA TIMÓN	ANODE DRIVE	ANODO PIEDE	1	CM822157T2
	ÁNODO TRANSOM	ANODE TRANSOM	ANODO TRANSOM	1	CM818298

Modelo Model Modello	DESCRIPCIÓN	DESCRIPTION	DESCRIZIONE	Unds. Units Unità	Ref.
40 (4 Tiempos 4 Strokes 4 Tempi)	BUJÍA	SPARK PLUG	CANDELE	4	NGKDPR6EA-9
	TERMOSTATO	THERMOSTAT	TERMOSTATO	1	REC825212T02
	CORREA DISTRIBUCIÓN	TIMMING BELT	CINGHIE DISTRIBUZIONE	1	PAF25-05000023
	IMPULSOR (RATIO 1.83:1 / 2:1)	IMPELLER (RATIO 1.83:1 / 2:1)	GIRANTE (RATIO 1.83:1 / 2:1)	1	REC47-8508910
	IMPULSOR (RATIO 2.31:1)	IMPELLER (RATIO 2.31:1)	GIRANTE (RATIO 2.31:1)	1	REC47-43026Q02
	FILTRO GASOLINA (Serial 0G589999<)	FUEL FILTER (Serial 0G589999<)	FILTRO BENZINA (Serial 0G589999<)	1	REC40155
	FILTRO GASOLINA (Serial 0G590000>)	FUEL FILTER (Serial 0G590000>)	FILTRO BENZINA (Serial 0G590000>)	1	REC40145
	FILTRO ACEITE	OIL FILTER	FILTRO OLIO	1	REC35-822626Q04
	ÁNODO COLA TIMÓN (RATIO 1.83:1 / 2:1)	ANODE DRIVE (RATIO 1.83:1 / 2:1)	ANODO PIEDE (RATIO 1.83:1 / 2:1)	1	CM822157T2
	ÁNODO COLA TIMÓN (RATIO 2.31:1)	ANODE DRIVE (RATIO 2.31:1)	ANODO PIEDE (RATIO 2.31:1)	1	CM31640
	ÁNODO COLA (RATIO 2.31:1)	ANODE DRIVE (RATIO 2.31:1)	ANODO PIEDE (RATIO 2.31:1)	2	CM826134
	ÁNODO TRANSOM (BIG FOOT)	ANODE TRANSOM BIG FOOT	ANODO TRANSOM BIG FOOT	1	CM818298
	ÁNODO TRANSOM (NO FOOT)	ANODE TRANSOM NOT BIG FOOT	ANODO TRANSOM NON BIG FOOT	1	CM825271
	ÁNODO BLOQUE MOTOR	OIL FILTER	FILTRO OLIO	3	CM826887M
40 CARB (3CYL)	BUJÍA	SPARK PLUG	CANDELE	3	NGKDPR6EA-9
	TERMOSTATO	THERMOSTAT	TERMOSTATO	1	REC825212T02
	CORREA DISTRIBUCIÓN	TIMMING BELT	CINGHIE DISTRIBUZIONE	1	PAF25-05000023
	IMPULSOR (RATIO 1.83:1)	IMPELLER (RATIO 1.83:1)	GIRANTE (RATIO 1.83:1)	1	REC47-8508910
	IMPULSOR (RATIO 2.31:1)	IMPELLER (RATIO 2.31:1)	GIRANTE (RATIO 2.31:1)	1	REC47-43026Q02
	FILTRO GASOLINA	FUEL FILTER	FILTRO BENZINA	1	REC35-877565T
	FILTRO ACEITE	OIL FILTER	FILTRO OLIO	1	REC35-822626Q04
	ÁNODO COLA TIMÓN (RATIO 2:1)	ANODE DRIVE (RATIO 2:1)	ANODO PIEDE (RATIO 2:1)	1	CM822157T2
	ÁNODO COLA TIMÓN (RATIO 2.31:1)	ANODE DRIVE (RATIO 2.31:1)	ANODO PIEDE (RATIO 2.31:1)	1	CM31640
	ÁNODO COLA (RATIO 2.31:1)	ANODE DRIVE (RATIO 2.31:1)	ANODO PIEDE (RATIO 2.31:1)	1	CM818298
	ÁNODO TRANSOM	ANODE TRANSOM	ANODO TRANSOM	1	CM818298
40 (4 CYL)	BUJÍA	SPARK PLUG	CANDELE	4	NGKDPR6EA-9
	TERMOSTATO	THERMOSTAT	TERMOSTATO	1	REC14586
	CORREA DISTRIBUCIÓN	TIMMING BELT	CINGHIE DISTRIBUZIONE	1	PAF25-05000023
	IMPULSOR (RATIO 1.83:1)	IMPELLER (RATIO 1.83:1)	GIRANTE (RATIO 1.83:1)	1	REC47-19453T
	IMPULSOR (RATIO 2.31:1)	IMPELLER (RATIO 2.31:1)	GIRANTE (RATIO 2.31:1)	1	REC47-43026Q02
	FILTRO GASOLINA	FUEL FILTER	FILTRO BENZINA	1	REC35-877565T
	FILTRO ACEITE	OIL FILTER	FILTRO OLIO	1	REC35-822626Q04
	ÁNODO COLA TIMÓN (RATIO 1.83:1)	ANODE DRIVE (RATIO 1.83:1)	ANODO PIEDE (RATIO 1.83:1)	1	CM17264
	ÁNODO COLA TIMÓN (RATIO 2.31:1)	ANODE DRIVE (RATIO 2.31:1)	ANODO PIEDE (RATIO 2.31:1)	1	CM31640
	ÁNODO COLA (RATIO 2.31:1)	ANODE DRIVE (RATIO 2.31:1)	ANODO PIEDE (RATIO 2.31:1)	2	CM826134
	ÁNODO TRANSOM	ANODE TRANSOM	ANODO TRANSOM	1	CM818298
40 EFI (3 CYL)	BUJÍA	SPARK PLUG	CANDELE	3	CHARA8HC
	TERMOSTATO	THERMOSTAT	TERMOSTATO	1	REC825212T02
	CORREA DISTRIBUCIÓN	TIMMING BELT	CINGHIE DISTRIBUZIONE	1	PAF25-05000023
	IMPULSOR	IMPELLER	GIRANTE	1	REC47-8508910
	FILTRO GASOLINA (LINEA)	INLINE FUEL FILTER	FILTRO BENZINA IN LINIA	1	REC35-879885T
	FILTRO GASOLINA	FUEL FILTER	FILTRO BENZINA	1	PAF15-07080000
	FILTRO ACEITE	OIL FILTER	FILTRO OLIO	1	REC35-822626Q04
	ÁNODO COLA TIMÓN	ANODE DRIVE	ANODO PIEDE	1	CM822157T2
	ÁNODO TRANSOM	ANODE TRANSOM	ANODO TRANSOM	1	CM818298
40 EFI (4 CYL)	BUJÍA	SPARK PLUG	CANDELE	4	CHARA8HC
	TERMOSTATO	THERMOSTAT	TERMOSTATO	1	REC14586
	CORREA DISTRIBUCIÓN	TIMMING BELT	CINGHIE DISTRIBUZIONE	1	PAF25-05000023
	IMPULSOR (RATIO 1.83:1)	IMPELLER (RATIO 1.83:1)	GIRANTE (RATIO 1.83:1)	1	REC47-19453T
	IMPULSOR (RATIO 2.33:1)	IMPELLER (RATIO 2.33:1)	GIRANTE (RATIO 2.33:1)	1	REC47-43026Q02
	FILTRO GASOLINA (LINEA)	INLINE FUEL FILTER	FILTRO BENZINA IN LINIA	1	REC35-879885T
	FILTRO GASOLINA	FUEL FILTER	FILTRO BENZINA	1	PAF15-07080000
	FILTRO ACEITE	OIL FILTER	FILTRO OLIO	1	REC35-822626Q04
	ÁNODO COLA TIMÓN (RATIO 1.83:1)	ANODE DRIVE (RATIO 1.83:1)	ANODO PIEDE (RATIO 1.83:1)	1	CM17264
	ÁNODO COLA TIMÓN (RATIO 2.33:1)	ANODE DRIVE (RATIO 2.31:1)	ANODO PIEDE (RATIO 2.31:1)	1	CM31640
	ÁNODO COLA	ANODE DRIVE	ANODO PIEDE	2	CM826134
	ÁNODO TRANSOM	ANODE TRANSOM	ANODO TRANSOM	1	CM818298
40 (ITALY)	BUJÍA	SPARK PLUG	CANDELE	4	NGKDPR6EA-9
	TERMOSTATO	THERMOSTAT	TERMOSTATO	1	REC825212T02
	IMPULSOR (RATIO 1.83:1)	IMPELLER (RATIO 1.83:1)	GIRANTE (RATIO 1.83:1)	1	REC47-8508910
	IMPULSOR (RATIO 2.31:1)	IMPELLER (RATIO 2.31:1)	GIRANTE (RATIO 2.31:1)	1	REC47-43026Q02
	FILTRO GASOLINA (LINEA)	INLINE FUEL FILTER	FILTRO BENZINA IN LINIA	1	REC40145
	FILTRO ACEITE	OIL FILTER	FILTRO OLIO	1	REC35-822626Q04
	ÁNODO COLA TIMÓN (RATIO 1.83:1)	ANODE DRIVE (RATIO 1.83:1)	ANODO PIEDE (RATIO 1.83:1)	1	CM822157T2
	ÁNODO COLA TIMÓN (RATIO 2.31:1)	ANODE DRIVE (RATIO 2.31:1)	ANODO PIEDE (RATIO 2.31:1)	1	CM31640
	ÁNODO COLA	ANODE DRIVE	ANODO PIEDE	2	CM826134
	ÁNODO TRANSOM	ANODE TRANSOM	ANODO TRANSOM	1	CM818298
	ÁNODO BLOQUE MOTOR	ANODE ENGINE	ANODO MOTORE	4	CM826887M

Modelo Model Modello	DESCRIPCIÓN	DESCRIPTION	DESCRIZIONE	Unds. Units Unità	Ref.
45 BODENSEE	BUJÍA	SPARK PLUG	CANDELE	4	NGKDPR6EA-9
	TERMOSTATO	THERMOSTAT	TERMOSTATO	1	REC825212T02
	IMPULSOR (RATIO 1.83:1 / 2:1)	IMPELLER (RATIO 1.83:1 / 2:1)	GIRANTE (RATIO 1.83:1 / 2:1)	1	REC47-8508910
	IMPULSOR (RATIO 2.31:1)	IMPELLER (RATIO 2.31:1)	GIRANTE (RATIO 2.31:1)	1	REC47-43026Q02
	FILTRO GASOLINA (Serie 0G589999<)	FUEL FILTER (Serial 0G589999<)	FILTRO BENZINA (Serie 0G589999<)	1	REC40155
	FILTRO GASOLINA (Serie 0G590000>)	FUEL FILTER (Serial 0G590000>)	FILTRO BENZINA (Serie 0G590000>)	1	REC40145
	FILTRO ACEITE	OIL FILTER	FILTRO OLIO	1	REC35-822626Q04
	ÁNODO COLA TIMÓN (RATIO 1.83:1 / 2:1)	ANODE DRIVE (RATIO 1.83:1 / 2:1)	ANODO PIEDE (RATIO 1.83:1 / 2:1)	1	CM822157T2
	ÁNODO COLA TIMÓN (RATIO 2.31:1)	ANODE DRIVE (RATIO 2.31:1)	ANODO PIEDE (RATIO 2.31:1)	1	CM31640
	ÁNODO COLA (RATIO 2.31:1)	ANODE DRIVE (RATIO 2.31:1)	ANODO PIEDE (RATIO 2.31:1)	2	CM826134
	ÁNODO TRANSOM (BIG FOOT)	ANODE TRANSOM BIG FOOT	ANODO TRANSOM BIG FOOT	1	CM818298
	ÁNODO TRANSOM (NO BIG FOOT)	ANODE TRANSOM NOT BIG FOOT	ANODO TRANSOM NON BIG FOOT	1	CM825271
	ÁNODO BLOQUE MOTOR	ANODE ENGINE	ANODO MOTORE	4	CM826887M
50 & 50 BIGFOOT	BUJÍA	SPARK PLUG	CANDELE	4	NGKDPR6EA-9
	TERMOSTATO	THERMOSTAT	TERMOSTATO	1	REC825212T02
	IMPULSOR (RATIO 1.83:1)	IMPELLER (RATIO 1.83:1)	GIRANTE (RATIO 1.83:1)	1	REC47-8508910
	IMPULSOR (RATIO 2.31:1)	IMPELLER (RATIO 2.31:1)	GIRANTE (RATIO 2.31:1)	1	REC47-43026Q02
	FILTRO GASOLINA	FUEL FILTER	FILTRO BENZINA	1	REC40145
	FILTRO ACEITE	OIL FILTER	FILTRO OLIO	1	REC35-822626Q04
	ÁNODO COLA TIMÓN (RATIO 1.83:1)	ANODE DRIVE (RATIO 1.83:1)	ANODO PIEDE (RATIO 1.83:1)	1	CM822157T2
	ÁNODO COLA TIMÓN (RATIO 2.31:1)	ANODE DRIVE (RATIO 2.31:1)	ANODO PIEDE (RATIO 2.31:1)	1	CM31640
	ÁNODO COLA (RATIO 2.31:1)	ANODE DRIVE (RATIO 2.31:1)	ANODO PIEDE (RATIO 2.31:1)	2	CM826134
	ÁNODO TRANSOM	ANODE TRANSOM	ANODO TRANSOM	1	CM818298
	ÁNODO BLOQUE MOTOR	ANODO ENGINE	ANODO MOTORE	4	CM826887M
	ÁNODO TRANSOM (NO BIG FOOT)	ANODO TRANSOM (NOT BIG FOOT)	ANODO TRANSOM NON BIG FOOT	1	CM825271
	ÁNODO BLOQUE MOTOR	ENGINE ANODO	ANODO MOTORE	4	CM826887M
50 (EFI) (4 CYL)	BUJÍA	SPARK PLUG	CANDELE	4	CHARA8HC
	TERMOSTATO	THERMOSTAT	TERMOSTATO	1	REC14586
	CORREA DISTRIBUCIÓN	TIMMING BELT	CINGHIE DISTRIBUZIONE	1	PAF25-05000023
	IMPULSOR (RATIO 1.83:1)	IMPELLER (RATIO 1.83:1)	GIRANTE (RATIO 1.83:1)	1	REC47-19453T
	IMPULSOR (RATIO 2.33:1)	IMPELLER (RATIO 2.33:1)	GIRANTE (RATIO 2.33:1)	1	REC47-43026Q02
	FILTRO GASOLINA (LINEA)	INLINE FUEL FILTER	FILTRO BENZINA IN LINIA	1	REC35-879885T
	FILTRO GASOLINA	FUEL FILTER	FILTRO BENZINA	1	PAF15-07080000
	FILTRO ACEITE	OIL FILTER	FILTRO OLIO	1	REC35-822626Q04
	ÁNODO COLA TIMÓN (RATIO 1.83:1)	ANODE DRIVE (RATIO 1.83:1)	ANODO PIEDE (RATIO 1.83:1)	1	CM17264
	ÁNODO COLA TIMÓN (RATIO 2.33:1)	ANODE DRIVE (RATIO 2.33:1)	ANODO PIEDE (RATIO 2.33:1)	1	CM31640
	ÁNODO COLA	ANODE DRIVE	ANODO PIEDE	2	CM826134
	ÁNODO TRANSOM	ANODE TRANSOM	ANODO TRANSOM	1	CM818298
50 (4 CYL)	BUJÍA	SPARK PLUG	CANDELE	4	NGKDPR6EA-9
	TERMOSTATO	THERMOSTAT	TERMOSTATO	1	REC14586
	CORREA DISTRIBUCIÓN	TIMMING BELT	CINGHIE DISTRIBUZIONE	1	PAF25-05000023
	IMPULSOR (RATIO 1.83:1)	IMPELLER (RATIO 1.83:1)	GIRANTE (RATIO 1.83:1)	1	REC47-19453T
	IMPULSOR (RATIO 2.31:1)	IMPELLER (RATIO 2.31:1)	GIRANTE (RATIO 2.31:1)	1	REC47-43026Q02
	FILTRO GASOLINA (LINEA)	INLINE FUEL FILTER	FILTRO BENZINA IN LINIA	1	REC35-877565T
	FILTRO ACEITE	OIL FILTER	FILTRO OLIO	1	REC35-822626Q04
	ÁNODO COLA TIMÓN (RATIO 1.83:1)	ANODE DRIVE (RATIO 1.83:1)	ANODO PIEDE (RATIO 1.83:1)	1	CM17264
	ÁNODO COLA TIMÓN (RATIO 2.31:1)	ANODE DRIVE (RATIO 2.31:1)	ANODO PIEDE (RATIO 2.31:1)	1	CM31640
	ÁNODO COLA (RATIO 2.31:1)	ANODE DRIVE (RATIO 2.31:1)	ANODO PIEDE (RATIO 2.31:1)	2	CM826134
	ÁNODO TRANSOM	ANODE TRANSOM	ANODO TRANSOM	1	CM818298
60 (4 CYL)	BUJÍA	SPARK PLUG	CANDELE	4	NGKDPR6EA-9
	TERMOSTATO	THERMOSTAT	TERMOSTATO	1	REC14586
	CORREA DISTRIBUCIÓN	TIMMING BELT	CINGHIE DISTRIBUZIONE	1	PAF25-05000023
	IMPULSOR (RATIO 1.83:1)	IMPELLER (RATIO 1.83:1)	GIRANTE (RATIO 1.83:1)	1	REC47-19453T
	IMPULSOR (RATIO 2.31:1)	IMPELLER (RATIO 2.31:1)	GIRANTE (RATIO 2.31:1)	1	REC47-43026Q02
	FILTRO GASOLINA (LINEA)	INLINE FUEL FILTER	FILTRO BENZINA IN LINIA	1	REC35-877565T
	FILTRO ACEITE	OIL FILTER	FILTRO OLIO	1	REC35-822626Q04
	ÁNODO COLA TIMÓN (RATIO 1.83:1)	ANODE DRIVE (RATIO 1.83:1)	ANODO PIEDE (RATIO 1.83:1)	1	CM17264
	ÁNODO COLA TIMÓN (RATIO 2.31:1)	ANODE DRIVE (RATIO 2.31:1)	ANODO PIEDE (RATIO 2.31:1)	1	CM31640
	ÁNODO COLA (RATIO 2.31:1)	ANODE DRIVE (RATIO 2.31:1)	ANODO PIEDE (RATIO 2.31:1)	2	CM826134
	ÁNODO TRANSOM	ANODE TRANSOM	ANODO TRANSOM	1	CM818298

Modelo Model Modello	DESCRIPCIÓN	DESCRIPTION	DESCRIZIONE	Unds. Units Unità	Ref.
60 EFI (4 CYL)	BUJÍA	SPARK PLUG	CANDELE	4	CHARA8HC
	TERMOSTATO	THERMOSTAT	TERMOSTATO	1	REC14586
	CORREA DISTRIBUCIÓN	TIMMING BELT	CINGHIE DISTRIBUZIONE	1	PAF25-05000023
	IMPULSOR (RATIO 1.83:1)	IMPELLER (RATIO 1.83:1)	GIRANTE (RATIO 1.83:1)	1	REC47-19453T
	IMPULSOR (RATIO 2.33:1)	IMPELLER (RATIO 2.33:1)	GIRANTE (RATIO 2.33:1)	1	REC47-43026Q02
	FILTRO GASOLINA (LINEA)	INLINE FUEL FILTER	FILTRO BENZINA IN LINIA	1	REC35-879885T
	FILTRO GASOLINA	FUEL FILTER	FILTRO BENZINA	1	PAF15-07080000
	FILTRO ACEITE	OIL FILTER	FILTRO OLIO	1	REC35-822626Q03
	ÁNODO COLA TIMÓN (RATIO 1.83:1)	ANODE DRIVE (RATIO 1.83:1)	ANODO PIEDE (RATIO 1.83:1)	1	CM822157T2
	ÁNODO COLA TIMÓN (RATIO 2.33:1)	ANODE DRIVE (RATIO 2.33:1)	ANODO PIEDE (RATIO 2.33:1)	1	CM31640
	ÁNODO COLA	ANODE DRIVE	ANODO PIEDE	2	CM826134
	ÁNODO TRANSOM	ANODE TRANSOM	ANODO TRANSOM	1	CM818298
75 (BODENSEE)	BUJÍA	SPARK PLUG	CANDELE	4	NGKLFR5A-11
	TERMOSTATO	THERMOSTAT	TERMOSTATO	1	REC825212T02
	IMPULSOR	IMPELLER	GIRANTE	1	REC47-43026Q02
	FILTRO GASOLINA	FUEL FILTER	FILTRO BENZINA	1	REC68V-24563-00
	FILTRO ACEITE	OIL FILTER	FILTRO OLIO	1	REC35-822626Q04
	ÁNODO COLA TIMÓN	ANODE DRIVE	ANODO PIEDE	1	CM31640
	ÁNODO COLA	ANODE DRIVE	ANODO PIEDE	2	CM826134
	ÁNODO TRANSOM	ANODE TRANSOM	ANODO TRANSOM	1	CM818298
80 - 100 EFI (4 CYL)	BUJÍA	SPARK PLUG	CANDELE	4	NGKLFR4AE
	IMPULSOR	IMPELLER	GIRANTE	1	REC47-43026Q02
	FILTRO GASOLINA	FUEL FILTER	FILTRO BENZINA	2	REC35-879885T
	FILTRO ACEITE	OIL FILTER	FILTRO OLIO	1	REC35-877761Q01
	FILTRO AIRE	AIR FILTER	FILTRO ARIA	1	RM35-8M0082911
	ÁNODO COLA TIMÓN	ANODE DRIVE	ANODO PIEDE	1	CM31640
	ÁNODO COLA	ANODE DRIVE	ANODO PIEDE	2	CM826134
	ÁNODO TRANSOM	ANODE TRANSOM	ANODO TRANSOM	1	CM818298
135 / 150 / 175 / 200 VERADO (4 CYL)	BUJÍA	SPARK PLUG	CANDELE	4	NGKILFR6G-E
	BUJÍA (0P514869 >)	SPARK PLUG (0P514869 >)	CANDELE (0P514869 >)	4	NGKILFR6G-E
	TERMOSTATO	THERMOSTAT	TERMOSTATO	1	RM880640508
	IMPULSOR	IMPELLER	GIRANTE	1	REC47-43026Q02
	FILTRO GASOLINA (LINEA)	INLINE FUEL FILTER	FILTRO BENZINA IN LINIA	1	REC35-877565T
	FILTRO GASOLINA	FUEL FILTER	FILTRO BENZINA	1	RAC31871
	PRE-FILTRO GASOLINA	FUEL PRE-FILTER	PRE-FILTRO BENZINA	1	RACS3227
	FILTRO ACEITE	OIL FILTER	FILTRO OLIO	1	REC35-896546T
	FILTRO AIRE	AIR FILTER	FILTRO ARIA	1	REC35-896247
	CORREA DISTRIBUCIÓN	TIMMING BELT	CINGHIE DISTRIBUZIONE	1	REC57-880566Q14
	ÁNODO COLA TIMÓN	ANODE DRIVE	ANODO PIEDE	1	CM76214
	ÁNODO COLA	ANODE DRIVE	ANODO PIEDE	2	CM826134
	ÁNODO TRANSOM	ANODE TRANSOM	ANODO TRANSOM	1	CM818298
	KIT ÁNODOS (ZINC)	ANODE KIT (ZINC)	KIT ANODI (ZINCO)	1	CMVERADO4KITA
	KIT ÁNODOS (MAGNESIO)	ANODE KIT (MAGNESIUM)	KIT ANODI (MAGNESIO)	1	CMVERADO4KITM
200 / 225 / 250 / 275 / 300 VERADO (4 CYL)	BUJÍA	SPARK PLUG	CANDELE	6	NGKILFR6G-E
	BUJÍA (0P520553 a 2B144122)	SPARK PLUG (0P520553 to 2B144122)	CANDELE (0P520553 a 2B144122)	6	NGKILFR6G-E
	TERMOSTATO	THERMOSTAT	TERMOSTATO	1	RM880640508
	IMPULSOR	IMPELLER	GIRANTE	1	REC47-43026Q02
	FILTRO GASOLINA (LINEA)	INLINE FUEL FILTER	FILTRO BENZINA IN LINIA	1	REC35-877565T
	FILTRO GASOLINA	FUEL FILTER	FILTRO BENZINA	1	RAC31871
	PRE-FILTRO GASOLINA	FUEL PRE-FILTER	PRE-FILTRO BENZINA	1	RACS3227
	FILTRO ACEITE	OIL FILTER	FILTRO OLIO	1	REC35-883701K01
	FILTRO AIRE	AIR FILTER	FILTRO ARIA	1	REC35-893318T02
	CORREA DISTRIBUCIÓN	TIMMING BELT	CINGHIE DISTRIBUZIONE	1	REC57-880566Q14
	ÁNODO COLA TIMÓN	ANODE DRIVE	ANODO PIEDE	1	CM76214
	ÁNODO COLA	ANODE DRIVE	ANODO PIEDE	2	CM826134
	ÁNODO TRANSOM	ANODE TRANSOM	ANODO TRANSOM	4	CM892227
	ÁNODO TRANSOM	ANODE TRANSOM	ANODO TRANSOM	1	CM880653
	KIT ÁNODOS (ZINC)	ANODE KIT (ZINC)	KIT ANODI (ZINCO)	1	CMVERADO6KITA
	KIT ÁNODOS (MAGNESIO)	ANODE KIT (MAGNESIUM)	KIT ANODI (MAGNESIO)	1	CMVERADO6KITM

By Carlos Sánchez

HÉLICES ALUMINO E INOXIDABLES DE 3 Y 4 PALAS
3 & 4 BLADE ALUMINUM & STAINLESS STEEL PROPELLERS
ELICHE ALLUMINIO E INOX DA 3 E 4 PALE

SISTEMA CÓDIGO REFERENCIAS
PART NO. CODING SYSTEM
SISTEMA DI CODICE

❶ ❷ ❸ ❹ — [ ][ ][ ] — [ ][ ] — [ ]

D — P — M

❶	❷	❸	❹
1. Mercury, Mariner 2. Johnson, Evinrude 3. Yamaha 4. Suzuki 5. Tohatsu 6. 7. 8. Volvo Penta 9. Rubex System	0.5,6,8 and 9.8 HP Grupo /Group / Gruppo 1. A Grupo /Group / Gruppo 2. B Grupo /Group / Gruppo 3. C Grupo /Group / Gruppo 4. D Grupo /Group / Gruppo 5. E Grupo /Group / Gruppo 6. F Grupo /Group / Gruppo 7. VP (Cubo std./Std. Hub / mozzo std.) 8. VP (Cubo largo /Long Hub / mozzo lungo)	1. Aluminio /Aluminum / Alluminio 2. **Saturn** Acero inox. /S.S. / Acciaio inox. 3. **New Saturn** Acero inox. /S.S. / Acciaio inox. 4. **Titan** Acero inox. /S.S. / Acciaio inox. 5. **HR Titan** Acero inox. /S.S. / Acciaio inox.	1. 3R Rubber Hub 2. 3L Rubber Hub 3. 4R Rubber Hub 4. 4L Rubber Hub

Ejemplo / Note / Esempio

D (Ø) — [ ][ ][ ]
i.e. 13 1/4 ➔133, 13.75 ➔138

P (Pitch) — [ ][ ]
i.e. 17" ➔ 17, 13"➔13

M — [ ]
P — Pin Drive Propeller
1, 2, 5 — Different Propeller Hub Fitting Spec.

SOLAS
AMITA 3

- Hélices de aluminio de 3 palas con núcleo de goma de gran resistencia.
- 3 blade aluminum propeller with heavy duty rubber hub.
- Eliche in alluminio a 3 pale con mozzi in gomma ad alta resistenza.

SOLAS
NEW SATURN PROP

- Hélices de acero inoxidable de 3 palas.
- Ofrece buena aceleración y rendimiento.
- Tamaño más pequeño que ofrece un diámetro extragrande.
- Three blade stainless steel propeller.
- Offers good acceleration & all-round performance.
- Smaller pitch sizes offered in extra large diameter with increased blade area.
- Eliche in acciaio inox a 3 pale.
- Consentono buone accellerazioni.
- Con un'area più ampia nelle pale.

SOLAS
TITAN

- Hélices de acero inox de 3 palas.
- Diseño de pala grande para un área más grande.
- Gran capacidad de transporte de carga.
- Excelente economía de combustible.
- 3 blade stainles steel propeller.
- High camber blade and large blade area design.
- Great load carrying capability.
- Excellent fuel economy.
- Eliche a 3 pale in acciaio inossidabile.
- Con un'area più ampia nelle pale.
- Ampia capacità di carico.
- Eccellente economia di carburante.

SOLAS
AMITA 4

- Hélices de aluminio de 4 palas con núcleo de goma de gran resistencia.
- Van muy suaves a poca velocidad y hace el barco muy manejable con la mar picada.
- 4 Blade aluminum propeller with heavy duty rubber hub.
- Smoother low speed makes the offshore boating activity much easier.
- Eliche in alluminio a 4 pale con mozzo in gomma ad alta resistenza.
- Ideale per basse velocità, rendono l'imbarcazione molto maneggevole anche con mare mosso.

SOLAS
HR TITAN 3 PROP

- Hélice de acero inoxidable de 3 palas.
- Alto rendimiento para cascos de alta velocidad.
- La inclinación de la hoja proporciona un excelente elevación de proa y aceleración.
- El diseño de copa grande aumenta la mordida y reduce el deslizamiento.
- Three blade stainless steel propeller.
- Performance prop for high speed planning hulls.
- High rake blade design provides excellent bow lift and acceleration.
- Heavy cup design increases bite and reduces slip.
- Eliche di acciaio inox a 3 pale.
- Alte prestazioni per scafi ad alta velocità.
- Il passo della pala fornisce un'eccellente elevazione e accelerazione.
- Il disegno della coppa aumenta le prestazioni e riduce lo slittamento.

GUÍA DE HÉLICES ALUMINO E INOXIDABLES DE 3 Y 4 PALAS
3 & 4 BLADE ALUMINUM & STAINLESS STEEL PROPELLERS APLICATION
GUIDA ELICHE ALLUMINIO E INOX DA 3 E 4 PALE

HP	R.O. OEM	B	D	P	R	TIPO TYPE	ALUMINIO ALUMINIUM ALLUMINIO		INOX STAINLESS STEEL		
							AMITA 3	AMITA 4	NEW SATURN	TITAN	HR TITAN 3
2.5, 3.5 HP Pasador plástico Plastic pin drive. Spinotto plastica.	48-815083	3	7 1/4	6	R	PLAST.	**SOL0001-073-06P**				
4, 4.5, 5, 6 HP 12 Estrías. Escape hélice. 12 Tooth spline. Thrust Hub exhaust. 12 Scalanature.		3 3	7.8 7.8	7 8	R R	ALUM. ALUM.	**SOL5011-078-07** **SOL5011-078-08**				
8, 9.9HP 12 Estrías. 4 Tiempos 2005+ Carcasa 2 1/2". 12 Tooth spline. 4 Strokes 2005+ Gearcase 2 1/2". 12 Scalanature. 4 Tempi 2005+ Carcassa 2 1/2"	48-895180A10 48-895182A10	3 3 3	8.5 8.5 8.5	7 8 9	R R R	ALUM. ALUM. ALUM.	**SOL5011-085-07** **SOL5011-085-08** **SOL5011-085-09**				
9.9HP BigFoot (2005+) 15,20 (4 Tiempos / 4 Strokes / 4 Tempi) (2007+) 14 Estrías. Carcasa 2 1/2" 14 Tooth spline. Gearcase 2 1/2" 14 Scalanature. Carcassa 2 1/2"		3 3 3 3 3	9.25 9.25 9.25 9.25 9.25	7 8 9 10 11	R R R R R	ALUM. ALUM. ALUM. ALUM. ALUM.	**SOL5111-093-07** **SOL5111-093-08** **SOL5111-093-09** **SOL5111-093-10** **SOL5111-093-11**				
4 Tiempos / Strokes / Tempi 8, 9.9 HP (2002-04) 2 Tiempos / Strokes / Tempi 6, 8, 9.9 HP (1986+) 10 HP (1995-01) 15 HP (1989-06) 2 & 4 Tiempos / Strokes / Tempi 8 Estrías. Carcasa 2 1/2". 8 Tooth spline. Gearcase 2 1/2". 8 Scalanature. Carcassa 2 1/2"	48-828152A12 48-828154A12 48-828156A12 48-828158A12	3 3 3 3 3	9 1/4 9 1/4 9 1/4 9 1/4 9 1/4	7 8 9 10 11	R R R R R	BlackMax BlackMax BlackMax BlackMax BlackMax	**SOL1111-093-07** **SOL1111-093-08** **SOL1111-093-09** **SOL1111-093-10** **SOL1111-093-11**				
4 Tiempos / Strokes / Tempi 9.9, 15 HP BigFoot (1999-05) 2 Tiempos / Strokes / Tempi 18 HP (1980-85) 20, 25 HP (1980-05) 10 Estrías. Carcasa 3". 10 Tooth spline. Gearcase 3". 10 Scalanature. Carcassa 3"	48-19636A10 48-19638A40 48-19639A40 48-19640A40 48-19642A40	3 3 3 3 3	10 3/8 10 3/8 10 3/8 10 3/8 10 1/4	9 1/2 11 12 13 14 1/2	R R R R R	BlackMax BlackMax BlackMax BlackMax BlackMax	**SOL1211-110-09** **SOL1211-105-11** **SOL1211-103-12** **SOL1211-101-13** **SOL1211-100-14**				
4 Tiempos / Strokes / Tempi 25 HP (1999-05) 30 HP (1994-05, 2010+) 40, 50, 60 HP 2 Tiempos / Strokes / Tempi 30 - 70 HP (1994-05) 13 Estrías. Carcasa 3 1/4". 13 Tooth spline. Gearcase 3 1/4". 13 Scalanature. Carcassa 3 1/4"	48-87818A11 48-85632A40 48-816702A40 48-816704A40 48-816706A40 48-73140A40	3 3 3 3 3 3	12 1/4 10 7/8 10 3/4 10 1/2 10 3/8 10 1/8	9 11 12 13 14 15	R R R R R R	BlackMax BlackMax BlackMax BlackMax BlackMax BlackMax	**SOL1311-121-09** **SOL1311-116-11** **SOL1311-114-12** **SOL1311-111-13** **SOL1311-111-14** **SOL1311-110-15**	**SOL1313-118-09** **SOL1313-111-11** **SOL1313-108-12** **SOL1313-105-13** **SOL1313-105-14**			
4 Tiempos / Strokes / Tempi 25 HP (2006+) 30 HP (2006+) no/not/no Bigfoot 10 Estrías. Base Tohatsu. Carcasa 3" 10 Tooth spline. Tohatsu base. Gearcase 3" 10 Scalanature. Base Tohatsu. Carcassa 3"		3 3 3 3 3	9.9 9.9 9.9 9.9 9.9	9 10 11 12 13	R R R R R		**SOL5211-099-09** **SOL5211-099-10** **SOL5211-099-11** **SOL5211-099-12** **SOL5211-099-13**				
4 Tiempos / Strokes / Tempi 40, 50, 60 HP (1995+) 75, 90, 115 HP 2 Tiempos / Strokes / Tempi 40/50/60 HP 65, 75, 90 HP 80, 85, 100, 115, 125, 140 HP 15 Estrías. Carcasa 4 1/4". 15 Tooth spline. Gearcase 4 1/4". 15 Scalanature. Carcassa 4 1/4"	48-77338A45 48-77340A45 48-77342A45 48-77344A45 48-77346A45 48-77348A45 48-17310A46 48-17312A46 48-17314A46 48-16986A46 48-16988A46 48-16990A46 48-16992A46	3 3 3 3 3 3 3 3 3 3 3 3 3	14 14 13 3/4 13 1/4 13 12 3/4 14 14 13 3/8 13 1/8 13 13 1/4 13 1/2	11 13 15 17 19 21 10 12 14 16 18 20 22	R R R R R R R R R R R R R	BlackMax BlackMax BlackMax BlackMax BlackMax BlackMax Vengeance Vengeance Vengeance Vengeance Vengeance Laser II Laser II	**SOL1411-140-11** **SOL1411-138-13** **SOL1411-135-15** **SOL1411-133-17** **SOL1411-130-19** **SOL1411-130-21**	**SOL1413-133-13** **SOL1413-130-15** **SOL1413-128-17** **SOL1413-125-19** **SOL1413-125-21**	**SOL1431-140-11** **SOL1431-138-13** **SOL1431-135-15** **SOL1431-133-17** **SOL1431-130-19** **SOL1431-130-21** **SOL1431-140-11** **SOL1431-138-13** **SOL1431-135-15** **SOL1431-133-17** **SOL1431-130-19** **SOL1431-130-21**		

B= PALAS / Blades / Pale
D= DIÁMETRO / Diametre / Diametro
P= PASO / Pich / Passo

R=ROTACIÓN / Rotation / Rotazione
(R) Derecha / Right / DX
(L) Izquierda / Left /SX

HP	R.O. OEM	B	D	P	R	TIPO TYPE	ALUMINIO ALUMINIUM ALLUMINIO		INOX STAINLESS STEEL		
							AMITA 3	AMITA 4	NEW SATURN	TITAN	HR TITAN 3
135-150-175HP 200, 220, 225, 250, 275, 300 HP 3.4L 90, 100, 115 HP Command Thrust 15 Estrías. Carcasa 4 3/4". 15 Tooth spline. Gearcase 4 3/4". 15 Scalanature. Carcassa 4 3/4"	48-78112A45	3	16	11	R	BlackMax					
	48-78114A45	3	16	13	R	BlackMax					
	48-78116A45	3	15	15	R	BlackMax	SOL1511-150-15	SOL1513-148-15			
		3	15	15	L		SOL1512-150-15				
	48-832828A45	3	14.8	17	R	BlackMax	SOL1511-148-17	SOL1513-145-17			
		3	14.8	17	L		SOL1512-148-17				
	48-832830A45	3	14.5	19	R	BlackMax	SOL1511-145-19	SOL1513-143-19			
		3	14.5	19	L		SOL1512-145-19				
	48-832832A45	3	14.3	21	R	BlackMax	SOL1511-143-21	SOL1513-140-21			
		3	14.3	21	L		SOL1512-143-21				
	48-832834A45	3	14.3	23	R	BlackMax	SOL1511-142-23				
		3	14.3	23	L		SOL1512-142-23				
	48-834850A45	4	15	16	R	Alpha 4		SOL1513-145-17			
	48-834852A45	4	14 1/2	18	R	Alpha 4		SOL1513-143-19			
	48-834854A45	4	14	20	R	Alpha 4		SOL1513-140-21			
	48-834855A45	4	14	20	L	Alpha 4					
	48-19838A46	3	15 3/4	15	R	Mirage Plus	SOL1511-158-15				
	48-19841A46	3	15 3/4	15	L	Mirage Plus	SOL1512-158-15			SOL1542-155-15	
	48-18278A46	3	15 1/2	17	R	Mirage Plus	SOL1511-155-17				SOL1571-155-17
	48-90159A46	3	15 1/2	17	L	Mirage Plus	SOL1512-155-17			SOL1542-153-17	SOL1572-155-17
	48-13700A46	3	15 1/4	19	R	Mirage Plus	SOL1511-153-19				SOL1571-153-19
	48-13701A46	3	15 1/4	19	L	Mirage Plus	SOL1512-153-19			SOL1542-150-19	SOL1572-153-19
	48-13702A46	3	15	21	R	Mirage Plus	SOL1511-153-21				SOL1571-150-21
	48-13703A46	3	15	21	L	Mirage Plus	SOL1512-153-21				SOL1572-150-21
	48-13704A46	3	14 3/4	23	R	Mirage Plus					SOL1571-148-23
	48-13705A46	3	14 3/4	23	L	Mirage Plus				SOL1542-145-23	SOL1572-148-23
		3	14 1/2	25	R						SOL1571-145-25

B= PALAS / Blades / Pale
D= DIÁMETRO / Diametre / Diametro
P= PASO / Pich / Passo

R=ROTACIÓN / Rotation / Rotazione
(R) Derecha / Right / DX
(L) Izquierda / Left /SX

GUÍA DE NÚCLEOS
HUB KIT APLICATION CHAST
GUIDA MOZZI

RUBEX

MODELO MODEL MODELLO	REF. KIT	MODELO HÉLICE PROPELLER TYPE MODELLO ELUCHE
25 HP BigFoot (1999-05), 30HP BigFoot (2010+), 30HP 2/4 T/Stroke (1994-05), 30HP Sea Pro/Marathon (1994+), 35HP (1994-89), 402 & 500 (1974-84), 40-50HP (2 & 4 Tiempos / 2 & 4 Stroke / 2 & 4 Tempi) No/Not/No Bigfoot (1977+), 45HP (1986-89), 48HP Mariner, 55HP Sea Pro/Marathon (1995+), 60HP Mariner (1976), 60HP (2 & 4 Tiempos / 2 & 4 Stroke / 2 & 4 Tempi). No/Not/Non Bigfoot, Sea Pro/Marathon (1978+), 65HP (1972-76), 70HP (1983+), 80HP Mariner (1977) 13 Estrías / tooth spline / Scalanature 3 1/4" Carcasa / Gearcase / Carcassa	**SOLRBX-114**	C
40-60 HP Bigfoot, 40-140 HP (No/Not/Non 135HP) V4 Gearcase (1978+) 15 Estrías / tooth spline / Scalanature 4 1/4" Carcasa / Gearcase / Carcassa	**SOLRBX-102**	D
90HP, 115HP (Command Thrust) (2014+) 135HP (1987+), 150-300 HP (1978+) 15 Estrías / tooth spline / Scalanature 4 3/4" Carcasa / Gearcase / Carcassa	**SOLRBX-102**	E
Menos de /less than / Inferiore a 400HP Mercury Alpha One, Bravo One 15 Estrías / tooth spline / Scalanature	**SOLRBX-102**	E
225 EFI (4 Tiempos / 4 Stroke / 4 Tempi) Fabricado por/ manufactured by / fabbricati per YAMAHA 15 Estrías / tooth spline / Scalanature 4 3/4" Carcasa / Gearcase / Carcassa	**SOLRBX-124**	E

GUÍA HÉLICES ALUMINIO
PROPELLERS ALUMINUM CHART
GUIDA ELICHE ALLUMINIO

Modelo / Model / Modello C 30-75 H.P.
3 PALAS / 3 BLADE / 3 PALE

B	D	P	R	Ref.
3	12.1	9	R	SOL9311-121-09
3	12	10	R	SOL9311-120-10
3	11.6	11	R	SOL9311-116-11
3	11.4	12	R	SOL9311-114-12
3	11.1	13	R	SOL9311-111-13
3	11.1	14	R	SOL9311-111-14
3	11	15	R	SOL9311-110-15

Modelo / Model / Modello D 40-140 H.P.
3 PALAS / 3 BLADE / 3 PALE

B	D	P	R	Ref.
3	14	9	R	SOL9411-140-09
3	14	11	R	SOL9411-140-11
3	13.75	13	R	SOL9411-138-13
3	13.5	15	R	SOL9411-135-15
3	13.25	17	R	SOL9411-133-17
3	13.2	19	R	SOL9411-132-19
3	13.2	21	R	SOL9411-132-21

Modelo / Model / Modello E 135-300 H.P.
3 PALAS / 3 BLADE / 3 PALE

B	D	P	R	Ref.
3	15.5	11	R	SOL9511-155-11
3	15.3	13	R	SOL9511-153-13
3	16	13	R	SOL9511-160-13
3	15	15	R	SOL9511-150-15
3	15	15	L	SOL9511-150-15
3	14.8	17	R	SOL9511-148-17
3	14.8	17	L	SOL9511-148-17
3	14.5	19	R	SOL9511-145-19
3	14.5	19	L	SOL9511-145-19
3	14.3	21	R	SOL9511-143-21
3	14.3	21	L	SOL9511-143-21

RUBEX

Hélice de aluminio con núcleo intercambiable (no incluido).
Aluminium interchangeable hub propellers (not included).
Eliche in alluminio con mozzo intercambiabile (non incluso).

GUÍA HÉLICES INOX.
STAINLESS STEEL PROPELLERS APLICATION CHART
GUIDA ELICHE INOX

Modelo / Model / Modello C 30-75 H.P.
3 PALAS / 3 BLADE / 3 PALE

B	D	P	R	Ref.
3	11 5/8	11	R	SOL9331-116-11
3	11 3/8	12	R	SOL9331-114-12
3	11 1/8	13	R	SOL9331-111-13
3	11 1/8	14	R	SOL9331-111-14
3	11	15	R	SOL9331-110-15

Modelo / Model / Modello D 40-140 H.P.
3 PALAS / 3 BLADE / 3 PALE

B	D	P	R	Ref.
3	13 3/4	13	R	SOL9431-138-13
3	13 3/4	13	L	SOL9432-138-13
3	13 1/2	15	R	SOL9431-135-15
3	13 1/2	15	L	SOL9432-135-15
3	13 1/4	17	R	SOL9431-133-17
3	13 1/4	17	L	SOL9432-133-17
3	13	19	R	SOL9431-130-19
3	13	19	L	SOL9432-130-19
3	13	21	R	SOL9431-130-21

Modelo / Model / Modello E 90-140 H.P.
3 PALAS / 3 BLADE / 3 PALE

B	D	P	R	Ref.
3	14 1/2	15	R	SOL9531-145-15
3	14 1/2	15	L	SOL9532-145-15
3	14 1/4	17	R	SOL9531-143-17
3	14 1/4	17	L	SOL9532-143-17
3	14	19	R	SOL9531-140-19
3	14	19	L	SOL9532-140-19
3	14	21	R	SOL9531-140-21
3	14	21	L	SOL9532-140-21
3	14	23	R	SOL9531-140-23
3	14	23	L	SOL9532-140-23

Modelo / Model / Modello E 135-350 H.P.
3 PALAS / 3 BLADE / 3 PALE

B	D	P	R	Ref.
3	15 3/4	15	R	SOL9571-158-15
3	15 3/4	15	L	SOL9572-158-15
3	15 1/2	17	R	SOL9571-155-17
3	15 1/2	17	L	SOL9572-155-17
3	15 1/4	19	R	SOL9571-153-19
3	15 1/4	19	L	SOL9572-153-19
3	15	21	R	SOL9571-150-21
3	15	21	L	SOL9572-150-21
3	14 3/4	23	R	SOL9571-148-23
3	14 3/4	23	L	SOL9572-148-23
3	14 1/2	25	R	SOL9571-145-25
3	14 1/2	25	L	SOL9572-145-25

RUBEX

Hélice de acero inox. con núcleo intercambiable (no incluido).
Stainless steel interchangeable hub propellers (not included).
Eliche di acciaio inox con mozzo intercambiabile (non incluso).