ÍNDICE

GUÍA DE IDENTIFICACIÓN DE MODELOS 72

SISTEMA ALIMENTACIÓN Y FILTRACIÓN PÁG
BOMBAS DE COMBUSTIBLE ELÉCTRICAS Y KITS 217
BOMBAS DE COMBUSTIBLES MECÁNICAS 219
• JUNTAS 220
• GUÍA BOMBAS MECÁNICAS 220
CARBURADORES 202
• REMANUFACTURADOS 202
• NUEVOS 203
• BOYAS 205
• GUÍA CARBURADOR 208
• GUÍA KITS CARBURADOR Y BOYAS 209
• KITS AGUJAS 205
• JUNTAS Y KITS CARBURADOR 205
• CHOKE 210
• APAGALLAMAS 211
INYECTORES 211
• KITS RETENES 211
FILTROS MOTORES DE GASOLINA 140
• FILTRO COMBUSTIBLE SEPARADOR DE AGUA 140
• BRACKETS 140
• RACORS 141
• FILTROS DECANTADORES 141
• FILTROS DE GASOLINA 142
• FILTROS AIRE 143
• FILTROS DE ACEITE 143
FILTROS MOTORES DE DIESEL 143
• FILTROS DIESEL 143
• FILTROS CON CAZOLETA Y ELEMENTOS 144
• FLTROS DECANTADORES DE DIESEL 145
• FILTROS ACEITE 146
• FILTROS DE AIRE 147
• FILTROS TIPO SEPAR 2000 147
• RACORS 147
ACCESORIOS PARA FILTROS 148

SISTEMA ELÉCTRICO PÁG
ALTERNADORES Y REGULADORES 136
• ALTERNADORES 136
• KIT SUSTITUCIÓN ALTERNADOR 137
• REGULADOR DE ALTERNADOR 137
MOTORES TRIM Y COMPONENTES 137
MOTORES DE ARRANQUE 134
• EXTENSOR DE SOLENOIDE PARA TERMINALES 135
SENSORES 212
• MAP 212
• PICK UP 212
• TEMPERATURA AIRE 212
• PICADO 213
• POSICIÓN GAS, ÁRBOL DE LEVAS, CIGÜEÑAL 213
• TEMPERATURA ENFRIADOR, AGUA 213
• TEMPERATURA Y ACEITE CON ALARMA 214
• ACEITE PARA BOMBA COMBUSTIBLE 214
• IAC 214
• PRESIÓN ACEITE, COMBUSTIBLE 214
• GUÍA DE SENSORES 215
SOLENOIDES Y FUSIBLES 138
• SOLENOIDES 138
• RELÉS 139
• FUSIBLE 139

SISTEMA DE ENCENDIDO PÁG
BOBINAS 231
MÓDULOS IGNICIÓN 231
BUJIAS 232
CABLES PARA BUJÍA 234
DISTRIBUIDOR 221
• TAPA 221
• ROTORES 222
• TRIGGER 223
• PLATINOS 223
• CONDENSADORES 223
• KITS 224
• GUÍA KITS 225
• KITS DE CONVERSIÓN ELECTRÓNICO 226
• DESPIECES DISTRIBUIDORES 227
• DISTRIBUIDORES 230

SISTEMA DE REFRIGERACIÓN PÁG
BOMBA DE AGUA 132
• JUNTAS DE BOMBAS 133
• KITS REPARACIÓN BOMBA AGUA 176
• DESPIECE BOMBA AGUA 179
• JUNTAS 133
IMPULSORES 175
MANGUITOS DE MOTOR 239
TERMOSTATOS 127
• CUERPO 127
• EJE VÁLVULA 128
• CASQUILLO 128
• VÁLVULA T 129
• MÓDULO DISTRIBUCIÓN DE AGUA 129
• TAPA TERMOSTATO 129
• TERMOSTATOS Y KITS 131
• JUNTAS 129
INTERCAMBIADOR DE CALOR 244
ENFRIADOR DE ACEITE 244

PARTES DE MOTOR PÁG
SOPORTE MOTOR 193
RETENES DE CIGÜEÑAL 91
DESPIECE (470, 485, 488, 165, 170, 180, 190HP) 92
CORREAS 235
GUÍA CORREAS SERPENTÍN MOTOR 237
SISTEMA DE ESCAPE Y ADMISIÓN 93
• DESPIECES DE COLECTORES Y CODOS 94
• COLECTORES 116
• CODOS 118
• KITS SUPLEMENTOS 121
• EXTENSORES DE ESCAPE 122
• TAPAS Y JUNTAS 123
• FUELLES DE ESCAPE 125
• PALOMILLAS DE ESCAPE 125
• COLECTORES DE ADMISIÓN 126
GUÍA RETENES ACEITE 90
GUÍA DE AROS TÓRICOS 90
RETENES DE VÁLVULAS 90
JUNTA BASE MOTOR **FEL-PRO** 74
JUNTAS DE DISTRIBUCIÓN 89
GUÍA MANGUITOS (EJE-GASOLINA) 243
GUÍA MANGUITOS (INTRABORDA DIESEL) 244

UNIDADES DE TRANSMISIÓN PÁG
ÁNODOS 180
COLAS 149
GUÍA MANGUITOS COLA 241
DESPIECE COLAS 152
TRANSOM 184
• DESPIECES 184
• KITS DE JUNTAS 193
• CABLE DE CAMBIO 193
• ACOPLAMIENTO DE MOTOR 194
• SILENBLOCKS 194
• FUELLES TRANSOM 195
• FUELLES CABLE DE CAMBIO 195
• MANGUITOS Y PROTECTORES DE ESCAPE 195
• KITS BOTELLAS DE ACEITE 244
COMPONENTES CAMBIO 196
BRAZOS POWER TRIM Y MANGUERAS HIDRÁULICAS 197
• DESPICES TRIM 197
• LATIGUILLOS 201
HÉLICES Y GUIA DE APLICACIÓN 250
HERRAMIENTAS 172
GUÍA DE MANTENIMIENTO MOTORES 245
GUÍA DE MANTENIMIENTO TRANSMISIONES 249

ÍNDICE REF 254

TABLE OF CONTENTS

MODEL IDENTIFICATION CHART 72

FUEL & FILTRATION SYSTEM PÁG
ELECTRIC FUEL PUMP & KIT 217
MECHANIC FUEL PUMP 219
• GASKETS 220
• MECHANIC PUMPS APPLICATION 220
CARBURETOR 202
• REBUILT CARBURETORS 202
• NEW CARBURETORS 203
• FLOATS 205
• CARBURETOR GUIDE 208
• CARBURETOR REPAIR KITS & FLOAT APPLICATION 209
• INLET NEEDLE KIT 205
• CARBURETORS GASKETS & KITS 205
• CHOKE 210
• FLAME ARRESTORS 211
INJECTORS 211
• FUEL INJECTOR SEAL KIT 211
FILTERS GAS ENGINES 140
• WATER SEPARATING FUEL FILTER 140
• BRACKETS 140
• RACORDS 141
• COMPLETE FUEL FILTERS 141
• FUEL FILTERS 142
• AIR FILTERS 143
• OIL FILTERS 143
FILTERS DIESEL ENGINES 143
• DIESEL FILTERS 143
• BOWL FILTERS & ELEMENTS 144
• COMPLET DIESEL FILTERS 145
• OIL FILTERS 146
• FILTERS TYPE SEPAR 2000 146
• RACORS 147
FILTERS ACCESSORIES 148

ELECTRIC SYSTEM PÁG
ALTERNATORS, VOLTAGE REGULATORS & TRIM 136
• ALTERNATORS 136
• ALTERNATOR CONVERSION KIT 137
• VOLTAGE REGULATOR 137
TRIM ENGINES 137
STARTERS 134
• SOLENOID EXTENSOR FOR TERMINALS 135
SENDERS 212
• MAP 212
• PICK UP 212
• AIR TEMPERATURE 212
• KNOCK 213
• THROTTLE POSITION, CAMSHAFT POSITION, CRANKSHAFT POSITION 213
• COOLANT TEMPERATURE & WATER 213
• TEMPERATURA & OIL PRESSURE WARNING KIT 214
• ELECTRIC FUEL PUMP SWITC 214
• IAC 214
• OL PRESSURE 214
SOLENOID & FUSES 138
• SOLENOID 138
• RELAY 139
• FUSES 139

IGNITION SYSTEM PÁG
COILS 231
IGNITION MODULES 231
SPARK PLUGS 232
SPARK PLUGS WIRES 234
DISTRIBUTOR 221
• CAPS 221
• ROTORS 222
• TRIGGERS 223
• POINTS 223
• CONDENSERS 223
• TUNE UP KITS 224
• IGNITION APPLICATION GUIDE 225
• ELECTRONIC CONVERSION KITS 226
• DISTRIBUTORS PARTS 227
• DISTRIBUTORS 230

INDICE

COOLING SYSTEM	PÁG
WATER PUMP	132
• GASKETS	133
• WATER PUMP SERVICE KITS	176
• WATER PUMP ASSEMBLY	179
• GASKETS	133
IMPELLERS	175
HOSES	239
THERMOSTAT	127
• HOUSING	127
• CHECK BALL KIT	128
• THERMOSTAT SLEEVE	128
• TEE VALVE ASSEMBLY	129
• WATER DISTRIBUTION MODULE	129
• COVER	129
• THERMOSTATS & KITS	131
• GASKETS	129
HEAT EXCHANGERS	244
OIL COOLER	244

ENGINE PARTS	PÁG
ENGINE MOUNT SCREW	193
CRANKSHAFT OIL SEAL	91
PARTS (470, 485, 488, 165, 170, 180, 190 HP)	92
BELTS	235
SERPENTINE BELTS GUIDE	237
INTAKE & EXHAUST SYSTEM	**93**
• MANIFOLDS & ELBOWS PARTS	94
• MANIFOLDS	116
• ELBOWS	118
• RISER KITS	121
• EXHAUST EXTENSIOS	122
• CAPS & GASKETS	123
• EXHAUST BELLOW	125
• WATER SHUTTER	125
• INTAKE MANIFOLD	126
OIL SEALS GUIDE	90
O-RINGS GUIDE	90
VALVE STEM SEAL	90
FEL-PRO GASKETS	74
TIMING GASKETS	89
HOSES GUIDE (SHAFT - FUEL)	243
HOSES GUIDE (INBOARD - DIESEL)	244

UNIT DRIVES & COMPONENTS	PÁG
ANODES	180
STERN DRIVES	149
HOSES GUIDE (STERN DRIVES)	241
GEARCASE COMPONENTS	152
TRANSOM	**184**
• PARTS	184
• GASKETS KIT	193
• SHIFT CABLE ASSY	193
• COUPLER	194
• SILENBLOCKS	194
• TRANSOM U-JOINT BELLOWS	195
• SHIFT CABLE BELLOW SET	195
• EXHAUST TUBE & PROTECTORS	195
• RESERVOIR ASSEMBLIES KITS	244
SHIFT COMPONENTS	196
MODELS POWER TRIM ARMS & POWER STEERING HOSES	**197**
• TRIM PARTS	197
• POWER TRIM HOSES	201
PROPELLERS & APPLICATION	250
TOOLS	172
GUIDE MANTENANCE ENGINES	**245**
GUIDE MANTENANCE TRANSMISSIONS	**249**
TABLE REF	**254**

GUIDA DI IDENTIFICAZIONE MODELLO	**72**

SISTEMA ALIMENTAZIONE E FILTRAZIONE	PÁG
POMPE COMBUSTIBILE ELETTRICA E KIT	**217**
POMPE COMBUSTIBILE MECCANICHE	**219**
• GUARNIZIONE	220
• GUIDA POMPE MECCANICHE	220
CARBURATORE	**202**
• RIGENERATI	202
• NUOVO	203
• GALLEGGIANTI	205
• GUIDA KIT CARBURATORE E GALLEGGIANTI	209
• KIT SPILLO	205
• GUARNIZIONE E KIT CARBURATORE	205
• CHOKE	210
• PARAFIAMA	211
INIETTORI	**211**
• KIT PARAOLI	211
FILTRI MOTORI BENZINA	**140**
• FILTRO SEPARATORE ACQUA-BENZINA	140
• SUPPORTO	140
• RACCORDI	141
• FILTRI DECANTATORE BENZINA	141
• FILTRI BENZINA	142
• FILTRI ARIA	143
• FILTRI OLIO	143
FILTRI MOTORI DIESEL	**143**
• FILTRI DIESEL	143
• FILTRI CON COPPA E ELEMENTI	144
• FILTRI DECANTATORE DIESEL	145
• FILTRI OLIO	146
• FILTRI ARIA	147
• FILTRI TIPO SEPAR 2000	147
• RACCORDI	147
ACCESSORI PER FILTRI	148

SISTEMA ELETTRICO	PÁG
ALTERNATORE E REGOLATORI	**136**
• ALTERNATORE	136
• KIT SOSTITUZIONE ALTERNATORE	137
• REGOLATORE ALTERNATORE	137
MOTORI TRIM E COMPONENTE	**137**
MOTORINO D'AVVIAMENTO	**134**
• ESTENSORE SOLENOIDE PER TERMINALI	135
SENSORI	**212**
• MAP	212
• PICK UP	212
•TEMPERATURE ARIA	212
• BATTITO	213
• POSIZIONE FARFALLA, ASSE A CAMME E ALBERO MOTORE	213
•TEMPERATURA SCAMBIATORE E ACQUA	213
•TEMPERATURA PRESSIONE DELL'OLIO CON ALLARME	214
• IAC	214
• PRESIONE L'OLIO, COMBUSTIBILE	214
• GUIDA SENSORI	215
SOLENOIDE E FUSIBILE	**138**
• SOLENOIDE	138
• RELE	139
• FUSIBILE	139

SISTEMA DI ACCENSIONE	PÁG
BOBINE	231
MODULI AVVIAMENTO	231
CANDELE	232
CAVO PER CANDELE	234
SPINTEROGENO	**221**
• CALOTTE	221
• ROTORI	222
• TRIGGER	223
• PUNTINE	223
• CONDENSATORI	223
• KIT	224
• GUIDA KIT	225
• KIT DI CONVERSIONE ELETTRONICO	226
• PARTI SPINTEROGENI	227
• SPINTEROGENI	230

SISTEMA DI REFREDDAMENTO	PÁG
POMPA ACQUA	132
• GUARNIZIONE POMPE	133
• KIT RICAMBI POMPA	176
• PARTI POMPA	179
• GUARNIZIONI	133
GIRANTI	175
TUBI	239
TERMOSTATI	127
• CORPO	127
• ALBERINO TERMOSTATO	128
• BOCCOLA	128
• VALVOLA T	129
• MODULO DISTRIBUZIONE ACQUA	129
• COPERCHIO TERMOSTATO	129
• TERMOSTATI E KIT	131
• GUARNIZIONE	129
SCAMBIATORI DI CALORE	244
REFRIGERATORE DELL'OLIO	244

PARTI DEL MOTORE	PÁG
SUPPORTI MOTORE	193
PARAOLIO ALBERO MOTORE	91
PARTE (47, 485,488,165,170,180,190HP)	92
CINGHIE	235
GUIDA CINGHIE SERPENTINA	237
SISTEMA SCARICO E ASPIRAZIONE	**93**
• PARTE COLLETTORE E GOMITO	94
• COLLETTORE	116
• GOMITO	118
• KIT DISTANZIALI	121
• SCARICO ESTENSORE	122
• COPERCHIO E GUARNIZIONE	123
• CUFFIA DI SCARICO	125
• FARFALLA DI SCARICO	125
• COLLETTORE DI ASPIRAZIONE	126
GUIDA PARAOLIO	90
GUIDA ANELLI TENUTE	90
PARAOLIO VALVOLE	90
GUARNIZIONE BASE MOTORE **FEL-PRO**	74
GUARNIZIONE DISTRIBUZIONE	89
GUIDA MANICOTTO (ASSE-BENZINA)	243
GUIDA MANICOTTO (ENTROBORDO - DIESEL)	244

UNITÀ DI TRASMISSIONE	PÁG
ANODI	180
PIEDI	149
GUIDA MANICOTTO PIEDE	241
PARTI PIEDI	152
TRANSOM	184
• PARTE	184
• KIT GUARNIZIONI	193
• CAVO CAMBIO	193
• ACCOPPIAMENTO MOTORE	194
• SILENBLOCKS	194
• CUFFIE TRANSOM	195
• CUFFIA CAMBIO	195
• TUBO E PROTEZIONE SCARICO	195
• KIT BOTTIBLIA OLIO	244
COMPONENTI CAMBIO	196
PISTONI POWER TRIM E TUBI IDRAULICI	**197**
• PARTE TRIM	197
• TUBI POWER TRIM	201
ELICHE E GUIDA	250
ATTREZZI	172
GUIDA MANUTENZIONE MOTORI	**245**
GUIDA MANUTENZIONE TRASMISSIONI	**249**
INDICE REF	**254**

GUÍA DE IDENTIFICACIÓN DE MODELOS
MODEL IDENTIFICATION CHART
GUIDA DI IDENTIFICAZIONE MODELLO MOTORE

MODELO MODEL MODELLO	S/N	AÑO YEAR ANNO
SEA RAY		
3.0L	B787205-B917529	1988
4.3L	B785483-B921276	1988
4.3LX	B785981-B922330	1988
5.7L	B784799-B917017	1988
SRX5.7L, 350 Mag	B785241-B919012	1988
SRX7.4L, 454 Mag Alpha	B785149-B924857	1988
SRX7.4L-H, 454 Mag Bravo	B721206-B919343	1988
STERN DRIVES		
SRX7.4L, Alpha	B803866-C348032	1988
SRX7.4L-H, Bravo	B803872-B999972	1988
INBOARD ENGINES		
5.7L	B788204-B919356	1988
7.4L	B788179-B913769	1988
RENAULT 4 CYL. (STERN DRIVE)		
60	1887079-5049044	1965-68
80	2049045-2851423	1966-69
90	2851424-3226957	1970-72
GM 4 CYL. (STERN DRIVE)		
110	1537370-2044033	1963-66
120	1666601-3377340	1964-72
120	3377341-3770649	1972-73
120	3770650-4952700	1974-77
120	4952701-5192048	1978
120	5192049-6229717	1979-82
120	6229718-6853913	1983-84
120	6853914-B531853	1985-86
120/2.5L	B531854-C853255	1987-89
140	2508261-6229717	1968-82
140/3.0L	6229718-C856558	1982-89
3.0L/LX	C856559+	1990+
MERCURY MARINE 4 CYL. (STERN DRIVE)		
470 (2 bbl)	4208730-5520114	1976-79
470 (2 bbl)	5520115-6218036	1980-82
470 (2 bbl)	6218037-6916778	1983-84
170 (2 bbl)	6916779+	1985-86
165/3.7L (2 bbl)	6916779+	1987-89
485 (2 bbl)	5685394-6218036	1980-82
488 (4 bbl)	6170297-6916778	1983-84
190 (4 bbl)	6916779+	1985-86
180/3.7LX (4 bbl)	6916779+	1987-89
GM INLINE 6 CYL. (STERN DRIVE)		
140	1538930-1725960	1963
150	1666495-2048046	1964-66
160	2048022-2770031	1967-69
165	2770032-5178958	1970-78
165	5178959-5813433	1979-81
200	2453769-2712072	1969
GM V6 (STERN DRIVE)		
185 (4 bbl)	6330183-6919655	1983-84
185 (2 bbl)	A331455-B527954	1985-87
175/4.3L (2 bbl)	B527955-D714106	1987-92
4.3L (GEN II) (2 bbl)	D714107-F000877	1992-93
4.3L (GEN II) (2 bbl)	F000878-F601126	1993-95
4.3L (GEN II) (2 bbl)	F601127-F000878	1996
4.3LX (GEN+) (2 bbl)	F803000-K999999	1996-97
4.3L (GEN+) (2 bbl)	L010044+	1998+
4.3L EFI (GEN+) (TBI)	L012009+	1998+
205 (4 bbl)	A331455-B527954	1985-87
205/4.3LX (4 bbl)	B527955-D714369	1987-91
4.3LX (GENII) (4 bbl)	D714370-F001219	1992-93
4.3LX (GENII) (4 bbl)	F001220-F601126	1993-95
4.3LX (GENII) (4 bbl)	F601127-F802999	1996
4.3LXH (GEN+) (4 bbl)	F803114+	1996-97
4.3LH (GEN+) (4 bbl)	L010044+	1998
262 Mag (TBI) (GEN+)	F803800-K999999	1996-97
FORD V8 (STERN DRIVE)		
888 (2 bbl)	3108723-4887829	1971-77
215 (4 bbl)	2781153-3385720	1970-72
225 (4 bbl)	3385721-4166999	1973-74
225-S (4 bbl)	3385721-4166999	1973-74
233	4173000-4902304	1975-77
255	3258728-4175499	1971-74
GM V8 283, 327, 305 & 350 CID		
190	1564539-1730903	1963-64
898 (2 bbl)	4762210-6218461	1977-82
898 (2 bbl)	6218462-B525981	1983-84
200/5.0L (2 bbl)	6218462-F600999	1985-95
5.0L (2 bbl)	L015751+	1998+
5.0L EFI	L012052-L340000	1998-99
228 (4 bbl)	4765100-5170008	1977-78
228 (4 bbl)	5170009-6218461	1979-82
228 (4 bbl)	6218462-B525981	1982-84
230 (4 bbl)	6218462-B525981	1985-86
230/5.0LX (4 bbl)	B525982-F600999	1987-95
225	1539620-2694014	1963-69
250	2314301-2639854	1968-69
255	417550-4767999	1975-76
250	4768000-4908849	1977
260/5.7L	4908850-6218461	1978-82
260/5.7L	621462-B525981	1982-86
260/5.7L	B525982-F600999	1987-95
5.7L (2 bbl)	F601000+	1996-98
5.7L EFI	F225560+	1995+
5.7LX (4 bbl)	F601000-K999999	1996-97
5.7LX EFI	F752400-K999999	1996-97
5.7LX Bravo EFI	F800300-K999999	1996-97
350 Mag Alpha	A635178-B525981	1986-87
350 Mag Alpha	B525982-F600999	1987-95
350 Mag Alpha	F601000-K001526	1996
350 Mag Alpha	K001527-K999999	1997
350 Mag Alpha EFI	F800300-K999999	1996-97
350 Mag Bravo MPI	F415189-K999999	1995-97
350 Mag Bravo MPI (GEN+)	F602000-K999999	1996-97
350 Mag MPI (GEN+)	L010019+	1998+
270	2851074-3385720	1969-72
280TRS	4176250-4770199	1975-76
300 Tempest	6668677-B430367	1985-86
320 EFI	A543604-C622418	1987-89
GM V8 427, 454, 502, 540 & 572 (STERN DRIVE)		
325	2278747-3780449	1969-72
330	4623115-6083144	1977-81
330	6083145-B816450	1982-87
7.4L Bravo	B771113-D603117	1988-91
7.4L Bravo (GEN V)	D603118-F800699	1992-96
7.4L Bravo (GEN VI)	F800700-K999999	1996-97
7.4LX Bravo (MPI) (GEN V)	F602010-F801999	1996
7.4LX Bravo (MPI) (GEN VI)	F802000-K999999	1996-97
7.4L MPI (GEN VI)	L010003+	1998
7.4LX Bravo (TBI) (GEN VI)	F820000-K999999	1996-97
454 Mag Alpha	A631894+	1986-88
454 Mag Bravo (GEN V)	D805069-F304999	1992-94
454 Mag Bravo (GEN V)	F305000-F801699	1995-96
454 Mag Bravo (GEN VI)	F801700-K999999	1996-97
454 EFI (GEN V)	F115700-F802349	1994-96
454 Mag MPI (GEN VI)	F802350-K999999	1996-97
454 Mag MPI (GEN VI)	L010029-L085399	1998
454 Mag MPI (GEN VI)	L085400+	1999+
370 TRS	4179554-6721527	1978-85
370 TRS	6721528-B714586	1985-87
400 TRS	4179554-B457644	1980-86
420	A398941-D937011	1987-89
425	A398941-D937011	1990-93
440 TRS	4179554-B485220	1983-86
450 (GEN V)	F347100-F347277	1995-96
525 SC	D456000-F348963	1991-92
525 SC (GEN V)	D456000-F348963	1992-95
525 SC (GEN V)	F615814-F745215	1996

MODELO MODEL MODELLO	S/N	AÑO YEAR ANNO
525 SC (GEN VI)	F745260+	1996-97
390	2781129-3042731	1969-70
460 TRS	4719554-6181046	1983-86
465	C849992-F213244	1990-92
465 (GEN V)	C849992-F213244	1992-94
500 (GEN V)	F213293-F745159	1994-96
500 (GEN VI)	F745195-L001772	1997-98
502 Mag Bravo	C878221-D824588	1990-92
502 Mag Bravo (GEN V)	D824589-F114528	1992-93
502 EFI (GEN V)	D840650-F802599	1993-96
502 Mag MPI (GEN VI)	F802600-K999999	1996-97
500 EFI	L001477+	1999+
502 Mag MPI (GEN VI)	L085433+	1998
600 SC	D456489-F877642	1991-92
600 SC (GEN V)	D456489-F877642	1992-96
600 SC (GEN VI)	K000227+	1997
500 Bulldog	C577254-F745405	1990-96
500 Bulldog	K000248+	1997
575	A677429-D763716	1986-92
800 SC (GEN V)	D763836+	1993-96
MCM 4, 5, 6 & V8 CYL. DIESEL (STERN DRIVE ENGINE)		
Rover 60HP	31400000F+	1965-67
530 D-TA 150 HP	B993000-B993492	1989
636 D-TA 180 HP	B993500-C696047	1989
D183 140 HP	B993493-D725149	1990-93
D219 170 HP	C696048-D850124	1990-93
D254 200 HP	C849484-D554729	1990-93
D3.0L 140 HP	D725150+	1994+
D3.6L 170 HP	D850125+	1994+
D4.2L 200 HP	D554730+	1994+
D7.3L 238 HP	F060000+	1994+
MERCURY MARINE MIE 4 CYL (INBOARD)		
470	5520115-6218036	1980-81
FORD MIE V8 (INBOARD)		
215	2781153-3563181	1970-72
225	3385721-4176999	1970-72
233	4173000-4775784	1975-76
255	3258728-4178299	1973-74
GM MIE V8 305, 327, 350 CID (INBOARD)		
198	4762210-6218461	1977
228	4765100-5170008	1977-78
228	5170009-5907057	1978-80
230/5.0L (4 bbl)	5907058-B788151	1981-87
225	2278647-2694014	1968
250	2314301-2639854	1968-69
255	4175500-5907057	1975-80
260/5.7L	5907058-F024999	1981-93
270	2851074-3077735	1969-72
5.7L	F025000-K999999	1994-97
5.7L (GEN+)	L002003+	1998
5.7L MPI	K040300-K999999	1997
350 Mag MPI (GEN+)	L002008-L304499	1998
350 Mag MPI (GEN+)	L304500+	1999
350 Horizon	L304700+	1999+
5.7L Ski	A338533-B514626	1985-87
5.7L Competition Ski	B514627-F775199	1987-95
5.7L Competition Ski	F775200-K040003	1996
5.7L Competition Ski	K040004-K999999	1997
5.7L Competition Ski (GEN+)	L002005+	1998+
350 Mag Ski	D505454-K999999	1991-97
350 Mag EFI Ski	F215561-K999999	1994-97
350 Mag MPI Ski	F350583-F799999	1995-98
Black Scorpion Ski	F800000+	1996-98
GM MIE V8 427, 454, 482 & 502 CID (INBOARD)		
325	2278747-3780449	1968-74
330	4623115-5889913	1977-80
340/7.4L w/B/W MK4	5889914+	1981-92
7.4L w/Hurth (LH) MK4	C391564-D715493	1989-92
7.4L (LH)	D715494-K999999	1992-97
7.4L MPI (LH)	F563050-K999999	1995-97
7.4L MPI (L29) (GEN VI)	L002006+	1998
7.4L TBI (LH) (GEN VI)	F874815-K999999	1996-97
454 Mag MPI Horizon	L002200-L086049	1998-99
454 EFI (SKI) (GEN V)	F215800-F820099	1995-96
454 Mag MPI (SKI) (GEN VI)	F820100-K999999	1996-97

MODELO MODEL MODELLO	S/N	AÑO YEAR ANNO
350	9780450-4623109	1974-76
390	2781129-2825059	1969-70
8.2L w/Hurth	C878221-D857199	1990-92
8.2L (GEN V)	D857200-F819619	1993-96
8.2L MPI (LH) (GEN VI)	F819620-K999999	1996-97
8.2L MPI (LH) (GEN VI)	L002450-L0086012	1998
8.2L MPI (LH) (GEN VI)	L0086013+	1999
MIE 5, 6 & V8 CYL. DIESEL INBOARD ENGINES		
530 D-TA 150 HP	B993002-C539258	1989
636 D-TA 180 HP	B993750-C696011	1989
D183 150 HP	C539259-D725149	1990-93
D219 180 HP	C696012-D850124	1990-93
D254 210 HP	C849461-D554729	1990-93
D3.0L 150 HP	D725150+	1994+
D3.6L 180 HP	D850125+	1994+
D4.2L 210 HP	D554730+	1994+
D7.3L 262 HP	F060000+	1994+
MC 60, 80 & 90 STERN DRIVES & TRANSOM PLATES		
60 (O)	1830753-2063740	1965-66
80	2063741-2898029	1966-69
90	2898020-3225967	1970-72
MC I, II & III		
I	1534570-1684187	1963
II (1.33:1)	1474909-2278488	1962-67
II (1.78:1)	2398798-2671321	1968-69
III	2373127-3002613	1968-72
III	5128065+	1978+
MC 1A, 1B & 1C		
1A, 1B & 1C	1684188-1777798	1964
1A, 1B & 1C (E-Z Shift)	1776349-2065189	1965-66
MC 120, 140, 160 & 165		
120/140	2062141-378049	1967-73
120/140	3780850-4893634	1974-77
120/140	4893635-6225576	1978-82
160	2065190-2763441	1967-69
165	2763442-3780849	1970-73
165	3780849-4890459	1974-77
165	4890460-6268064	1978-82
MC 470 & 485		
470	4208730-4893830	1976-77
470	4893835-6225576	1978-82
485	5487437-6225576	1980-82
MC 488, 225S & 233		
888	3106717-3784374	1971-73
888	3784375-4782329	1974-77
225S	3856268-4200499	1974
233	4200500-4782329	1975-77
MC 898, 228, 250 & 260		
898/228	4782330-4898729	1977
898/228	4898730-6229157	1978-82
250	4791300-4898729	1977
260	4898730-6229157	1978-82
MC R, MR, ALPHA ONE, ALPHA ONE SS & ALPHA ONE GEN II		
R	6152230-6847029	1983-84
MR	6810538-A479506	1985
Alpha One	A470165+	1986-90
Alpha One SS	A545004+	1986-89
Alpha One Gen II	D469859+	1991+
MC BRAVO & BLACKHAWK		
Bravo One	B664190+	1988+
Bravo Two	C564952+	1989+
Bravo Three	D763691+	1993+
Blackhawk	F186717+	1994+
MC 215E & 215 H		
215 H	2782203-2909034	1970
215 E	2782203-2909034	1970-72
MC TR & TRS		
TR	3377316-3787239	1973
TR	3787240-4794899	1974-76
TR	4794900-5009866	1977
TR	5009867+	1978+
TRS	3787240-4203749	1974-75
TRS	4203750-4795399	1976
TRS	4795400+	1977+

JUNTAS PARA BASES GM Y FORD
MARINE GASKETS TO GM & FORD ENGINES
GUARNIZIONI PER MOTORI GM E FORD

FEL-PRO

Los Kits FEL-PRO, están diseñados y catalogados específicamente para aplicaciones marinas. Su calidad es superior a las juntas originales.
FEL-PRO gaskets kits are designed and cataloged specifically for marine engine applications. Their quality is even better than the oem's.
I kit di guarnizioni FEL-PRO, sono disegnati e fabbricati specificatamente per applicazioni marine. La qualità è assolutamente paragonabile a quelle originali.

SERIE SERIAL SERIE	Descripción	Description	Descrizione
FEL17000 - FEL17099	KIT JUNTAS DE CULATA en pack individual.	CYLINDER HEAD gasket single-packed	Guarnizioni TESTATA quantità 1
FEL17100 - FEL17199	JUEGOS DE CONVERSIÓN Todas las juntas y retenes de aceite que no se encuentran en los juegos de culata y que son necesarios para completar el acoplamiento del motor (incluye las juntas del cárter y los retenes).	CONVERSION KITS All gaskets and oil seals not found in a Head Set, that are necessary for a complete engine overhaul. This includes timing cover gaskets and seals, oil pan gaskets, and rear main bearing seals.	KIT PARTE BASSA Include tutte le guarnizioni ed i paraoli della parte bassa del motore, viene fornita anche la guarnizione della coppa dell'olio.
FEL17200 - FEL17299	KIT DE DESCARBONIZACIÓN Todas las juntas y retenes necesarios para el trabajo de las válvulas, incluyendo la culata, la tapa de la válvula y juntas de colector de admisión y colector de escape. (Los juegos de 4 cyl no contienen las juntas del colector de admisión/escape. Deben pedirse por separado).	HEAD SETS SERIES All gaskets and seals necessary for a valve griding job, including cylinder head gaskets, valve cover gaskets, intake & exhaust manifold gaskets (except 4 cyl intake set), and valve stem seals.	KIT PARTE ALTA (SMERIGLIO) Include tutte le guarnizioni ed i paraoli della parte alta del motore, testate, carter distribuzione, aspirazione e scarico. (motori a 4 cyl. la guarnizione aspirazione è da ordinare separatamente).
FEL17300 - FEL17399	KIT DE COLECTOR DE ADMISIÓN Juntas de la parte de admisión del colector, retenes y juntas de la base del distribuidor.	INTAKE MANIFOLD SETS Intake manifold side gaskets, intake manifold end seals, and distributor mounting gasket.	KIT GUARNIZIONE ASPIRAZIONE Tutte le guarnizioni
FEL17400 - FEL17499	KIT DE COLECTOR DE ESCAPE (De colector a culata)	EXHAUST MANIFOLD (manifold-to-cylinder head) gaskets.	KIT GUARNIZIONE SCARICO (dalla testata al collettore)
FEL17700 - FEL17749	KIT DE CONTRARROTACIÓN RETÉN TRASERO DEL CIGÜEÑAL Retenes traseros del cigüeñal diseñados para motores de rotación opuesta a la normal. (Retenes de rotación normal incluídos en el set de conversión)	REVERSE ROTATION REAR MAIN BEARING SEAL SETS Rear main bearing seals designed to seal a crankshaft which rotates in the opposite direction from normal (Standard rotation seal is included in conversion set)	PARAOLIO MOTORI CONTROROTANTI ALBERO MOTORE Nei motori rotazione STD il paraolio viene già incluso nel kit della parte bassa.
FEL17750 - FEL17799	KIT DE RETENES TAPA DEL CIGÜEÑAL DE CONTRARROTACIÓN Retenes de la tapa del cigüeñal diseñados para motores de rotación opuesta a la normal. (Retenes de rotación normal incluídos en el set de conversión).	REVERSE ROTATION TIMING COVER SEAL SETS SERIES Timing cover seals designed to seal crankshaft which rotates in the opposite direction from normal (standard rotation seal is included in Conversion set and Timing cover set)	PARAOLIO CARTER DISTRIBUZIONE CONTROTOTANTI Modelli rotazione STD, incluso nella parte bassa.
FEL17900 - FEL17949	KIT DE TAPA VÁLVULA Todas las juntas de las tapas de las válvulas para sellar el motor.	VALVE COVER SET SERIES All valve cover or push rod cover gaskets (and grommets if required) required to seal one engine.	KIT COPERCHIO PUNTERIE Tutte le guarnizioni
FEL17950 - FEL17999	KIT DE CÁRTER Todas las juntas del cárter.	OIL PAN SETS SERIES All oil pan gaskets & seals, or one-piece molded rubber oil pan gasket, required to seal one engine.	GUARNIZIONE COPPA DELL'OLIO Tutte le guarnizioni

120 / 205L (120 HP)

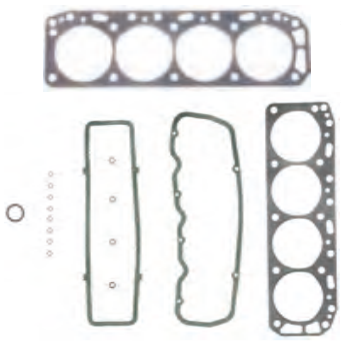

Ref	Descripción	Description	Descrizione
	CULATA	**CYLINDER HEAD**	**TESTATA**
FEL17000	JUNTA CULATA	CYLINDER HEAD	GUARNIZIONE TESTATA
FEL17200	KIT JUNTAS SUPERIOR No incluye juntas colector escape/admisión	GASKET HEAD SET Intake & Exhaust manifold gasket not included	KIT PARTE ALTA Non include guarnizioni collettore scarico / aspirazione
	INFERIOR	**CONVERSION**	**PARTE BASSA**
FEL17100	KIT JUNTAS INFERIOR (2361802+) retén 2 piezas, 4 piezas junta cárter.	CONVERSION GASKET SET (2361802+) 2 piece rear main bearing seal & 4 piece oil pan gasket	KIT PARTE BASSA (2361802+) Paraolio in 2 px, 4 pz guarnizione coppa dell'olio.

Ref	Descripción	Description	Descrizione
	COLECTOR ADMISIÓN-ESCAPE	**MANIFOLD INTAKE & EXHAUST**	**ASPIRAZIONE - SCARICO**
FEL17300	Junta Admisión-Escape (1666601 - 6229717)	Intake-Exhaust Gasket (1666601 - 6229717)	Guarnizione aspirazione - scarico (1666601 - 6229717)
FEL17302	Junta Admisión-Escape (6229718+)	Intake-Exhaust Gasket (6229718+)	Guarnizione aspirazione - scarico (6229718+)
	CARTER	**OIL PAN**	**COPPA DELL'OLIO**
FEL17950	KIT JUNTAS CARTER Retén trasero dos piezas, 4 piezas junta cárter.	GASKET OIL PAN SET Two piecerear main bearing seal & 4 piece oil pan gasket	KIT GUARNIZIONE Paraolio posteriore in 2, guarnizione coppa in 4 pz.
	TAPA VÁLVULAS	**VALVE COVER**	**COPERCHIO VALVOLE**
FEL17900	Junta Tapa Válvulas	Gasket	Guarnizione
	TAPA EMPUJADORES	**PUSH ROD COVER**	**COPERCHIO ASTE PUNTERIE**
FEL17903	Junta Tapa Empujadores	Gasket Push Rod Cover	Guarnizione coperchio aste punterie

140 / 3.0L, 140 / 3.0LX (115,130, 135, 140 HP)

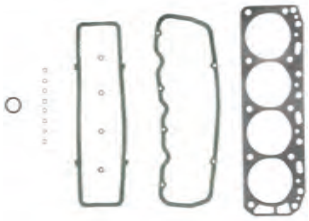

Ref	Descripción	Description	Descrizione
	CULATA	**CYLINDER HEAD**	**TESTATA**
FEL17000	JUNTA CULATA	CYLINDER HEAD	GUARNIZIONE TESTATA
FEL17200	KIT JUNTAS SUPERIOR No incluye juntas colector escape/admisión	GASKET HEAD SET Intake & Exhaust manifold gasket not included	KIT PARTE ALTA Non include guarnizioni collettore scarico / aspirazione
	INFERIOR	**CONVERSION**	**PARTE BASSA**
FEL17102	KIT JUNTAS INFERIOR retén 1 piezas, 1 pieza junta cárter.	CONVERSION GASKET SET 1 piece rear main bearing seal & 1 piece oil pan gasket	KIT PARTE BASSA Paraolio in 1 pz, 1 pz guarnizione coppa dell'olio.
FEL17100	KIT JUNTAS INFERIOR (2361802+) retén 2 piezas, 4 piezas junta cárter.	CONVERSION GASKET SET (2361802+) 2 piece rear main bearing seal & 4 piece oil pan gasket	KIT PARTE BASSA (2361802+) Paraolio in 2 pz, 4 pz guarnizione coppa dell'olio.
	COLECTOR ADMISIÓN-ESCAPE	**MANIFOLD INTAKE & EXHAUST**	**ASPIRAZIONE - SCARICO**
FEL17302	Junta Admisión-Escape (6229718+) excepto 3.0 LX	Intake-Exhaust Gasket (6229718+) excl. 3.0 LX	Guarnizione aspirazione - scarico (6229718+) eccetto 3.0 LX
FEL17304	Junta Admisión-Escape (6229718+) sólo 3.0 LX	Intake-Exhaust Gasket (6229718+) only 3.0 LX	Guarnizione aspirazione - scarico (6229718+) solo 3.0 LX
FEL17301	Junta Admisión-Escape (-9229717)	Intake-Exhaust Gasket (-9229717)	Guarnizione aspirazione - scarico (9229717)
	CARTER	**OIL PAN**	**COPPA DELL'OLIO**
FEL17950	KIT JUNTAS CARTER Retén trasero dos piezas, 4 piezas junta cárter.	GASKET OIL PAN SET Two piece rear main bearing seal & 4 piece oil pan gasket	KIT GUARNIZIONE Paraolio posteriore in 2, guarnizione coppa in 4 pz.

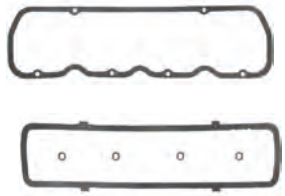

Ref	Descripción	Description	Descrizione
	TAPA VÁLVULAS	**VALVE COVER**	**COPERCHIO VALVOLE**
FEL17900	Junta Tapa Válvulas	Gasket	Guarnizione
	TAPA EMPUJADORES	**PUSH ROD COVER**	**COPERCHIO ASTE PUNTERIE**
FEL17903	Junta Tapa Empujadores	Gasket Push Rod Cover	Guarnizione coperchio aste punterie

165, 170, 180, 190, 470, 485, 488

Ref	Descripción	Description	Descrizione
	CULATA	**CYLINDER HEAD**	**TESTATA**
FEL17069	JUNTA CULATA	CYLINDER HEAD	GUARNIZIONE TESTATA

160 HP, 165 HP (2770032 - 6916778)

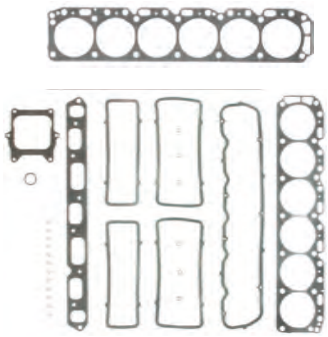

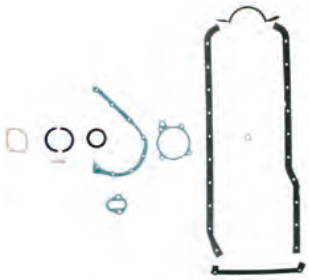

Ref	Descripción	Description	Descrizione
	CULATA	**CYLINDER HEAD**	**TESTATA**
FEL17019	JUNTA CULATA	CYLINDER HEAD	GUARNIZIONE TESTATA
FEL17219	KIT JUNTAS SUPERIOR No incluye juntas colector escape/admisión	GASKET HEAD SET Intake & Exhaust manifold gasket not included	KIT PARTE ALTA Non include guarnizioni collettore scarico / aspirazione
	INFERIOR	**CONVERSION**	**PARTE BASSA**
FEL17119	KIT JUNTAS INFERIOR Solo cárter 24 tornillos	CONVERSION GASKET SET 24 bolt oil pan only	KIT PARTE BASSA Solo coppa con 24 viti.
	COLECTOR ADMISIÓN-ESCAPE	**MANIFOLD INTAKE & EXHAUST**	**ASPIRAZIONE - SCARICO**
FEL17319	Junta Admisión-Escape	Intake-Exhaust Gasket	Guarnizione aspirazione - scarico
	CARTER	**OIL PAN**	**COPPA DELL'OLIO**
FEL17975	KIT JUNTAS CARTER Solo cárter 24 tornillos	GASKET OIL PAN SET 24 bolt oil pan only	KIT GUARNIZIONE Solo coppa con 24 viti.
	TAPA VÁLVULAS	**VALVE COVER**	**COPERCHIO VALVOLE**
FEL17925	Junta Tapa Válvulas	Gasket	Guarnizione
	TAPA EMPUJADORES	**PUSH ROD COVER**	**COPERCHIO ASTE PUNTERIE**
FEL17926	Kit junta Tapa Empujadores	Gasket Push Rod Cover Set	Kit guarnizione coperchio aste punterie

4.3L: 155, 175 HP, 4.3LX: 175, 180, 205 HP 175 & 185 HP 2 CUERPOS / HOUSING / CORPI BBL., 205 HP 4 CUERPOS / HOUSING / CORPI BBL.

	Ref	Descripción	Description	Descrizione
		CULATA	**CYLINDER HEAD**	**TESTATA**
	FEL17010	JUNTA CULATA Se necesitan dos	CYLINDER HEAD 2 required	GUARNIZIONE TESTATA Necessarie 2
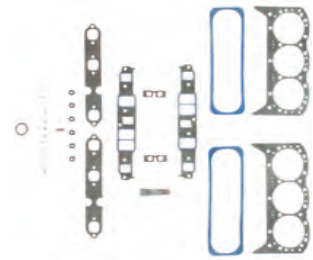	FEL17210	KIT JUNTAS SUPERIOR Motor sin eje equilibrado. Incluye juntas tapa válvulas y retenes.	GASKET HEAD SET Engine without balance shaft; valve cover gskts and premium valve stem seals incl.	KIT PARTE ALTA Motore senza asse bilanciato. Include guarnizione coperchio punterie e paraoli valvole.
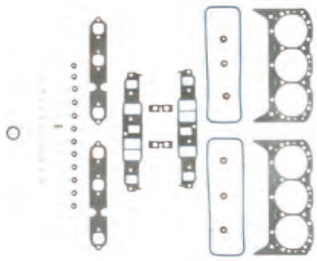	FEL17211	KIT JUNTAS SUPERIOR Motor con eje equilibrado. Incluye juntas tapa válvulas y retenes.	GASKET HEAD SET Engine with balance shaft; valve cover gskts and premium valve stem seals incl.	KIT PARTE ALTA Motore con asse bilanciato. Include guarnizione coperchio punterie e paraoli valvole.
		INFERIOR	**CONVERSION**	**PARTE BASSA**
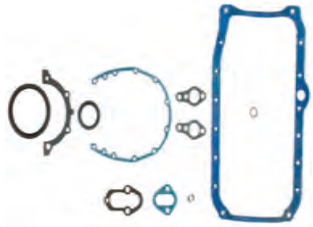	FEL17115	KIT JUNTAS INFERIOR Motor sin eje equilibrado con retén de una pieza y 1 pieza junta cárter incluye Junta de cárter.	CONVERSION GASKET SET Engine without balance shaft with one-piece rear main bearing seal & 1 piece oil pan gasket; oil pan gasket incl.	KIT PARTE BASSA Motore senza asse bilanciato. Paraolio post in 1 pz e guarnizione coppa in 1 pz.
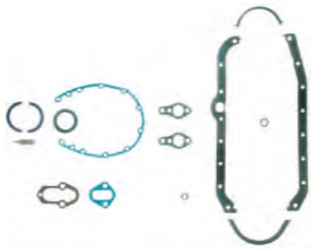	FEL17110	KIT JUNTAS INFERIOR Motor sin eje equilibrado con retén de 2 piezas y 4 piezaa junta cárter incluye Junta de cárter.	CONVERSION GASKET SET Engine without balance shaft with 2 pieced rear main bearing seal & 4 pieces oil pan gasket; oil pan gasket incl.	KIT PARTE BASSA Motore senza asse bilanciato. Paraolio post in 2 pz e guarnizione coppa in 4 pz.
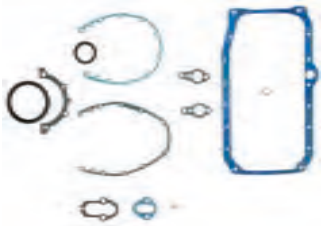	FEL17116	KIT JUNTAS INFERIOR Motor con eje equilibrado con retén de 1 pieza y 1 pieza junta cárter incluye Junta de cárter.	CONVERSION GASKET SET Engine without balance shaft with one-piece rear main bearing seal & 1 piece oil pan gasket; oil pan gasket incl.	KIT PARTE BASSA Motore con asse bilanciato. Paraolio post in 1 pz e guarnizione coppa in 1 pz.
		COLECTOR ADMISIÓN-ESCAPE	**MANIFOLD INTAKE & EXHAUST**	**ASPIRAZIONE - SCARICO**
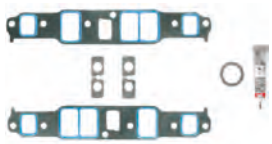	FEL17310	Kit Junta Admisión-Escape	Intake-Exhaust Gasket Set	Kit guarnizioni aspirazione
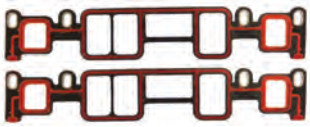	REC824326002	Junta Admisión Vortec (2 unid.)	Intake Gasket Vortec (2 units)	guarnizione aspirazione Vortec (2 unità)

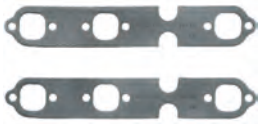

Ref	Descripción	Description	Descrizione
FEL17410	Kit juntas colector - escape	Exhaust gasket set	Kit guarnizione scarico
	CARTER	**OIL PAN**	**COPPA DELL'OLIO**
FEL17970	KIT JUNTAS CARTER 4 piezas junta cárter. (Retén 2 piezas)	GASKET OIL PAN SET 4 piece oil pan gasket (2 piece Seal)	KIT GUARNIZIONE Guarnizione coppa in 4 pz.
FEL17971	1 junta carter (Retén 1 pieza)	1 piece oil pan gasket (1 piece seal)	Guarnizione coppa in 1 pz (paraolio 1 pz)
REC27-142471	1 Junta Carter de goma	1 rubber oil pan gasket	Guarnizione 1 pz
	TAPA VÁLVULAS	**VALVE COVER**	**COPERCHIO VALVOLE**
FEL17920	KIT JUNTA TAPA VÁLVULAS Motor sin eje equilibrado.	GASKET SET Engine without balance shaft	GUARNIZIONE COPERCHIO PUNTERIE Motore senza asse equilibrato.
FEL17921	KIT JUNTA TAPA VÁLVULAS Motor con eje equilibrado.	GASKET SET Engine with balance shaft	GUARNIZIONE COPERCHIO PUNTERIE Motore con asse equilibrato.

5.0L: 215 HP, 225 HP , 888 (198 HP)
BASE FORD / FORD BLOCK / BASE FORD

Ref	Descripción	Description	Descrizione
	CULATA	**CYLINDER HEAD**	**TESTATA**
FEL17060	JUNTA CULATA Se necesitan dos	CYLINDER HEAD 2 required	GUARNIZIONE TESTATA Necessarie 2
FEL17260	KIT JUNTAS SUPERIOR Incluye retenes válvulas.	GASKET HEAD SET Premium valve stem seals incl.	KIT PARTE ALTA include paraoli valvole
	INFERIOR	**CONVERSION**	**PARTE BASSA**
FEL17160	KIT JUNTAS INFERIOR	CONVERSION GASKET SET	KIT PARTE BASSA

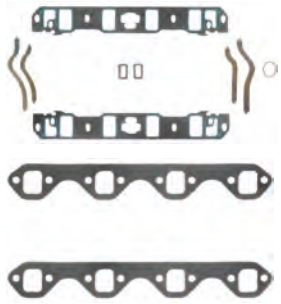

Ref	Descripción	Description	Descrizione
	COLECTOR ADMISIÓN-ESCAPE	**MANIFOLD INTAKE & EXHAUST**	**ASPIRAZIONE - SCARICO**
FEL17360	Kit Junta Admisión-Escape	Intake-Exhaust Gasket Set	Kit guarnizioni aspirazione
FEL17460	Kit juntas colector -escape	Oil pan gasket set	Kit guarnizione coppa olio
	CARTER	**OIL PAN**	**COPPA DELL'OLIO**
FEL17995	KIT JUNTAS CARTER (Retén 2 piezas)	GASKET OIL PAN SET (2 pieces seal)	KIT GUARNIZIONE (paraolio 2 pz)
	TAPA VÁLVULAS	**VALVE COVER**	**COPERCHIO VALVOLE**
FEL17945	KIT JUNTA TAPA VÁLVULAS Motor sin eje equilibrado. Juntas de goma PermaDry incluidas.	GASKET SET Engine without balance shaft, PermaDry molded rubber gaskets included.	GUARNIZIONE COPERCHIO PUNTERIE Motore senza asse equilibrato.

5.0L: 180, 190, 200, 228, 230 HP
5.0LX: 205, 230 HP; 198/888 (198HP)

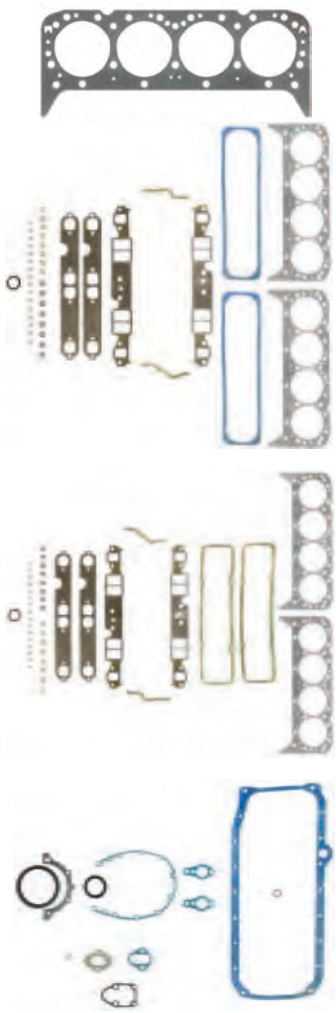

Ref	Descripción	Description	Descrizione
	CULATA	**CYLINDER HEAD**	**TESTATA**
FEL17020	JUNTA CULATA Se necesitan dos	CYLINDER HEAD 2 required	GUARNIZIONE TESTATA Necessarie 2
FEL17224	KIT JUNTAS SUPERIOR Tornillo centro tapa válvulas con juntas tapa válvulas. Incluye retenes valvulas.	GASKET HEAD SET w/center bolt desing valve covers; valve cover gskts; Premium valve stem seals inc.	KIT PARTE ALTA Coperchio punterie con vite nel centro, Include paraoli valvole.
FEL17220	KIT JUNTAS SUPERIOR Tornillo en el canto tapa válvulas. Incluye retenes válvulas.	GASKET HEAD SET Rim bolt desing valve covers. Premium valve stem seals incl.	KIT PARTE ALTA Coperchio punterie con vite nel perimetro. Include paraoli valvole.
	INFERIOR	**CONVERSION**	**PARTE BASSA**
FEL17125	KIT JUNTAS INFERIOR Retén de una pieza y junta cárter de una pieza incluye. (Retén 1 pieza)	CONVERSION GASKET SET One-piece rear main bearing seal & 1 piece oil pan gasket; oil pan gasket included (1 piece seal)	KIT PARTE BASSA Paraolio in 1 pz e guarnizone coppa in 1 pz. (paraolio 1 pz)

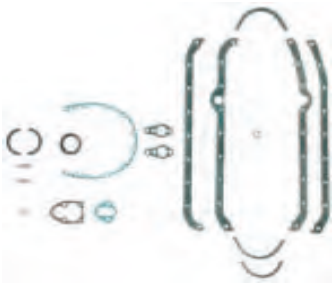

Ref	Descripción	Description	Descrizione
FEL17120	KIT JUNTAS INFERIOR Retén de dos piezas y junta cárter de 4 piezas	CONVERSION GASKET SET Two-piece rear main bearing seal & 4	KIT PARTE BASSA Paraolio in 2 pz e guarnizione coppa in 4 px.
	COLECTOR ADMISIÓN-ESCAPE	**MANIFOLD INTAKE & EXHAUST**	**ASPIRAZIONE - SCARICO**
FEL17320	Kit Junta Admisión-Escape	Intake-Exhaust Gasket Set	Kit guarnizioni aspirazione
REC27-807473A1	Junta Admisión Vortec (2 unid.) Junta de plástico.	Intake Gasket Vortec (2 units) Gasket in plastic.	Guarnizione Vortec necessita 2 pz guarnizione in plastica
FEL17420	Kit juntas colector -escape	Oil pan gasket set	Kit guarnizione scarico
	CARTER	**OIL PAN**	**COPPA DELL'OLIO**
FEL17982	1 pieza junta cárter incluye Junta de cárter.	1 piece oil pan gasket. PermaDry molded rubber oil pan gasket included	guarnizione in 1 pz.
FEL17983	1 pieza junta para motores con retén trasero de dos piezas.	1 piece PermaDry molded rubber gasket for engines w/Two-piece rear main bearing seal	Guarnizione in 1 pz, paraolio posteriore in 2 px.
FEL17980	Varilla aceite a babor con retén trasero de dos piezas y junta cárter de 4 piezas.	Port dipstick w//Two-piece rear main bearing seal & Four-piece oil pan gskt.	Asticella olio a SINISTRO con praolio
FEL17981	Varilla aceite a estribor con retén trasero de dos piezas y junta cárter de 4 piezas.	Starboard dipstick w//Two-piece rear main bearing seal & Four-piece oil pan gskt	Asticella olio DESTRO con paraoliio posteriore in 2 pz e guarnizione coppa da 4 pz.
	RETÉN TRASERO CIGÜEÑAL	**CRANKSHAFT REAR SEAL**	**PARAOLIO POSTERIORE ALBERO MOTORE**
FEL17725	Retén partido Contrarrotación, goma; dos piezas	Split seal Rev. rotation, rubber; two-piece	Controrotazione in 2 pz.
	TAPA VÁLVULAS	**VALVE COVER**	**COPERCHIO VALVOLE**
FEL17931	KIT JUNTA Tornillo centro tapa válvulas con juntas. Tornillo central	PermaDry molded rubber gskts. incl.	Coperchio punterie con viti centrali..
FEL17930	Tornillo en el canto.	Rim bolt desing	Coperchio punterie con viti nel perimetro.

Black Scorpion (315 HP) 5.7L: 230, 235, 260 HP, 5.7L Blue water Inboard 250, 260 HP 5.7L Bravo, 240, 250, 270 HP 5.7L Comp Ski, 250, 260 HP, 255 HP, 300, 300 MR/TR, 350 Magnum, 350 Magnum Tournament Ski (240, 250, 265, 270 HP)

	Ref	Descripción	Description	Descrizione
		CULATA	**CYLINDER HEAD**	**TESTATA**
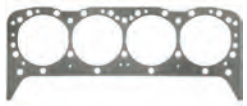	FEL17030	JUNTA CULATA Se necesitan dos	CYLINDER HEAD 2 required	GUARNIZIONE TESTATA Necessarie 2
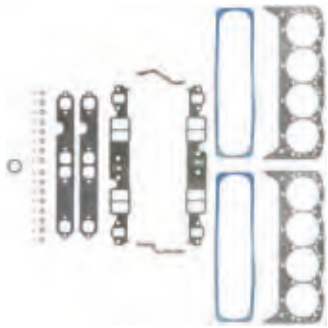	FEL17214	KIT JUNTAS SUPERIOR Excepto Gen+ con juntas plástico colector admisión,Tornillo centro tapa válvulas con juntas tapa válvulas. Retenes válvulas.	GASKET HEAD SET Exc. GEN+ eng. w/Center bolt design valve covers; valve cover gskts. incl. Premium valve stem seals incl.	KIT PARTE ALTA Eccetto Gen+ con guarnizione aspirazione in plastica. Coperchio punterie con viti nel centro. Include paraoli valvole.
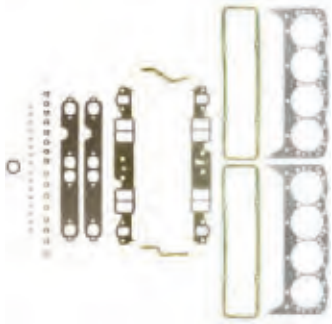	FEL17230	KIT JUNTAS SUPERIOR Excepto Gen+ con juntas plástico colector admisión,Tornillo borde tapa válvulas con juntas tapa válvulas. Incluye retenes válvulas.	GASKET HEAD SET Exc. GEN+ eng. w/Rim bolt desing valve covers; valve cover gskts. incl. Premium valve stem seals incl.	KIT PARTE ALTA Eccetto Gen+ con guarnizione aspirazione inplastica, coperchio punterie conviti nel perimetro. Include paraolio valvole.
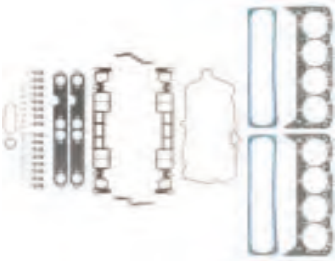	FEL17232	KIT JUNTAS SUPERIOR Gen+ con juntas plástico colector admisión,con juntas tapa válvulas. Retenes válvulas incluidos.	GASKET HEAD SET GEN+ w/ plastic intake manifold gskts. valve cover gskts. incl; Premium valve stem seals incl.	KIT PARTE ALTA Gen+ con guarnizione aspirazione inplastica con guarnizione PermaDry. Inclusi paraolio valvole.
		INFERIOR	**CONVERSION**	**PARTE BASSA**
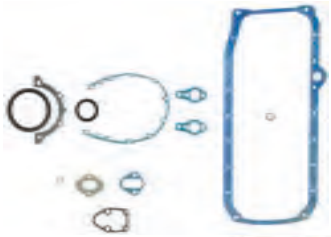	FEL17125	KIT JUNTAS INFERIOR Sin tapa de distribución de plástico, retén trasero de una pieza y junta cárter de una pieza. Junta de cárter de goma PermaDry incluída.	GASKET SET Eng. w/o plastic timing cover, 1 piece rear main bearing seal & one piece oil pan gskt. molded rubber oil pan gskt incl.	KIT PARTE BASSA Carter distribuzione in metallo, paraolio posteriore in 1 pz e guarnizione coppa olio in 1 pz.
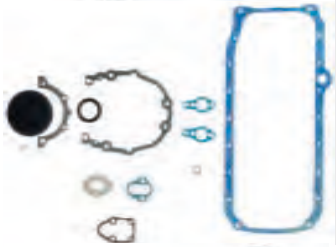	FEL17124	KIT JUNTAS INFERIOR Con tapa de distribución de plástico, retén trasero de una pieza y junta cárter de una pieza. Junta de cárter incluída.	CONVERSION GASKET SET Eng. with plastic timing cover, 1 piece rear main bearing seal & one piece oil pan gskt. oil pan gskt incl.	KIT PARTE BASSA carter distribuzione in plastica, paraolio posteriore in 1 pz e guarnizione coppa olio in 1 pz.
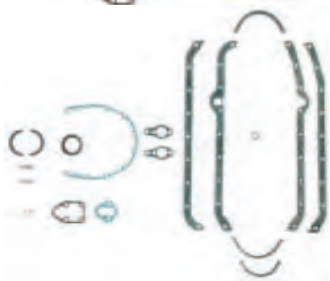	FEL17120	KIT JUNTAS INFERIOR Retén de dos piezas y junta cárter de 4 piezas	CONVERSION GASKET SET Two-piece rear main bearing seal & 4	KIT PARTE BASSA Paraolio posteriore in 2 pz e guarnizione coppa in 4 pz.

Ref	Descripción	Description	Descrizione
	COLECTOR ADMISIÓN-ESCAPE	**MANIFOLD INTAKE & EXHAUST**	**ASPIRAZIONE - SCARICO**
FEL17320	Kit Junta Admisión-Escape Excepto GEN+ con juntas de admisión de plástico.	Intake-Exhaust Gasket Set Excl. GEN+ eng. w/plastic intake gaskets.	Kit guarnizioni aspirazione Eccetto Gen+ guarnizione in plastica
REC27-807473A1	Junta Admisión Vortec (2 unid.) Junta de plástico.	Intake Gasket Vortec (2 units) Gasket in plastic.	Guarnizione Vortec necessita 2 pz guarnizione in plastica
FEL17420	Kit juntas colector -escape	Oil pan gasket set	Kit guarnizione scarico
	CARTER	**OIL PAN**	**COPPA DELL'OLIO**
FEL17982	1 pieza junta cárter incluye Junta de cárter.	1 piece oil pan gasket. PermaDry molded rubber oil pan gasket included	guarnizione in 1 pz.
FEL17983	1 pieza junta goma para motores con retén trasero de dos piezas.	1 piece PermaDry molded rubber gasket for engines w/Two-piece rear main bearing seal	Guarnizione in 1 pz, paraolio posteriore in 2 px.
FEL17980	Varilla aceite a babor con retén trasero de dos piezas y junta cárter de 4 piezas.	Port dipstick w//Two-piece rear main bearing seal & Four-piece oil pan gskt.	Asticella olio a SINISTRO con praolio
FEL17981	Varilla aceite a estribor con retén trasero de dos piezas y junta cárter de 4 piezas.	Starboard dipstick w//Two-piece rear main bearing seal & Four-piece oil pan gskt	Asticella olio DESTRO con paraolio posteriore in 2 pz e guarnizione coppa da 4 pz.
	RETÉN TRASERO CIGÜEÑAL	**CRANKSHAFT REAR SEAL**	**PARAOLIO POSTERIORE ALBERO MOTORE**
FEL17725	Retén Contrarrotación de dos piezas	Split seal Rev. rotation, rubber; two-piece	Controrotazione in 2 pz.
	TAPA VÁLVULAS	**VALVE COVER**	**COPERCHIO VALVOLE**
FEL17931	KIT JUNTA Tornillo centro tapa válvulas con juntas de goma PermaDry.	w/Center bolt desing valve PermaDry molded rubber gskts. incl.	Coperchio punterie con viti centrali.
FEL17930	KIT JUNTA Tornillo lateral	Rim bolt desing	Coperchio punterie con viti nel perimetro.
	RETÉN DISTRIBUCIÓN	**OIL SEAL TIMING COVER**	**PARAOLIO DISTRIBUZIONE**
REC3853341	Reten contrarotación Motor sin tapa distribución de plástico.	Reverse rotation oil seal Engines w/o plastic timing cover.	Paraolio controrotante. Motore con carter distribuzione in plastica.

5.8L 233 (3258728 - 4175499) (233 HP)
255 (3258728 - 4175499) (255 HP)
BASE FORD BLOCK

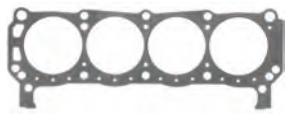

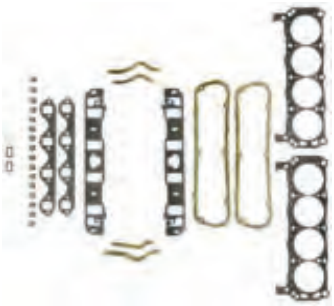

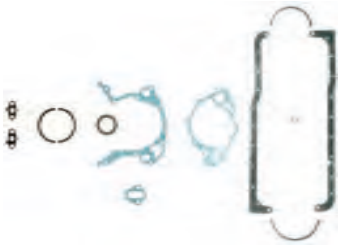

Ref	Descripción	Description	Descrizione
	CULATA	**CYLINDER HEAD**	**TESTATA**
FEL17060	JUNTA CULATA Se necesitan dos	CYLINDER HEAD 2 required	GUARNIZIONE TESTATA Necessarie 2
FEL17260	KIT JUNTAS SUPERIOR Con retenes valvula.	GASKET HEAD SET Premium valve stem	KIT PARTE ALTA Include paraolio valvole
	INFERIOR	**CONVERSION**	**PARTE BASSA**
FEL17165	KIT JUNTAS INFERIOR	CONVERSION GASKET SET	KIT PARTE BASSA
	COLECTOR ADMISIÓN-ESCAPE	**MANIFOLD INTAKE & EXHAUST**	**ASPIRAZIONE - SCARICO**
FEL17360	Kit Junta Admisión	Intake Gasket Set	Kit guarnizioni aspirazione
FEL17460	Kit Junta escape	Exhaust Gasket Set	Kit guarnizioni scarico
	CARTER	**OIL PAN**	**COPPA DELL'OLIO**
FEL17996	Kit Juntas Carter	Gasket Oil Pan Set	Kit guarnizione coppa dell'olio
	TAPA VÁLVULAS	**VALVE COVER**	**COPERCHIO VALVOLE**
FEL17945	KIT JUNTA	Gasekt set	kit guarnizioni

7.4L 454 V8: 420 HP GEN IV & V
425 (385, 400, 425 HP GEN IV & V)
525 SC (500 HP GEN V)
7.4L BLUE WATER INBOARD (-D715493) (310, 340 HP GEN IV)
7.4L BLUE WATER INBOARD (D715494+) (310 HP GEN V)
7.4L BRAVO (-D603117) (300, 330 HP GEN. IV)
7.4L BRAVO I (D603118+) (300, 330 HP GEN V)
7.4L BRAVO II (D603118+) (300, 330 HP GEN V)
7.4L BRAVO III (D603118+) (3350 HP GEN V)
7.4L EFI (F215800+) (310 HPGEN V), 330, 340, 350, 370TRS, 400 TRS GEN IV, 450 HP GENE V
454 MAGNUM ALPHA (A631894 - B785148) (330 HP GEN IV)
454 MAGNUM BRAVO (B721206 - D805068) (350, 365 HP GENE IV)
454 MAGNUM BRAVO (D805069+) (350 HP GENE V)

	Ref	Descripción	Description	Descrizione
		CULATA	CYLINDER HEAD	TESTATA
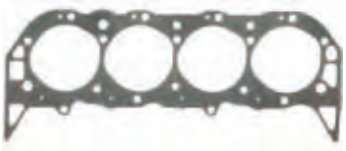	FEL17040	JUNTA CULATA Gene IV exc. H.O. Se necesitan dos	CYLINDER HEAD Gene IV exc. H.O. 2 required	GUARNIZIONE TESTATA Gene IV escluso H.O. Necessarie 2
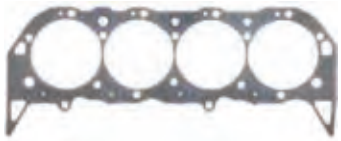	FEL17049	JUNTA CULATA Gene IV sólo H.O. super medida Se necesitan 2.	CYLINDER HEAD Gene IV H.O. only super bore 2 required	GUARNIZIONE TESTATA Gene IV solo H.O. maggiorata. Necessarie 2
	FEL17046	JUNTA CULATA Gene IV sólo H.O. Se necesitan 2.	CYLINDER HEAD Gene IV H.O. only 2 required	GUARNIZIONE TESTATA Gene IV solo H.O. Necessarie 2
	FEL17042	JUNTA CULATA Gene IV & V. Se necesitan 2.	CYLINDER HEAD Gene IV & V. 2 required	GUARNIZIONE TESTATA Gene IV e V. Necessarie 2
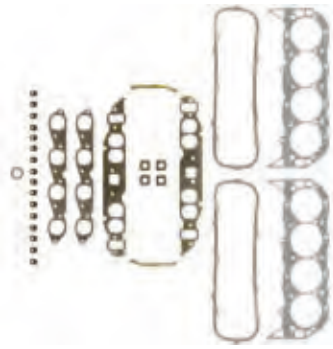	FEL17240	KIT JUNTAS SUPERIOR Gene IV exc. H.O. con admisión ovalada. Se incluye retenes de válvula	GASKET HEAD SET Gen IV exc. H.O. w/oval intake ports; premium valve stem seals incl.	KIT PARTE ALTA Gene IV escluso H.O. con aspirazione ovale. Inclusi paraoli valvole.
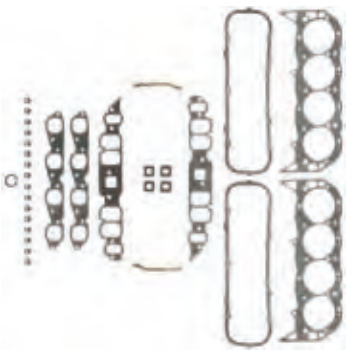	FEL17241	KIT JUNTAS SUPERIOR Gene IV exc. H.O. con admisión rectangular. Se incluye retenes de válvula	GASKET HEAD SET Gen IV exc. H.O. w/rectangular intake ports; premium valve stem seals incl.	KIT PARTE ALTA Gene IV escluso H.O. con aspirazione rettangolare. Inclusi paraoli valvole.

	Ref	Descripción	Description	Descrizione
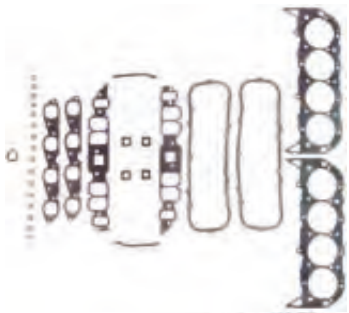	FEL17246	KIT JUNTAS SUPERIOR Gene IV sólo H.O. con admisión rectangular. Se incluye retenes de válvula	GASKET HEAD SET Gen IV only H.O. w/rectangular intake ports; premium valve stem seals incl.	KIT PARTE ALTA Gene IV solo H.O. con aspirazione rettangolare. Inclusi paraoli valvole.
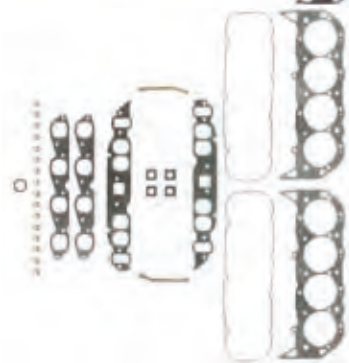	FEL17242	KIT JUNTAS SUPERIOR Gene V exc. EFI y H.O. con admisión ovalada. Se incluye retenes de válvula. Gene VI exc. EFI y H.O. con admisión ovalada, juntas de goma PermaDry de tapa válvulas y retenes incluídos	GASKET HEAD SET Gen V exc. EFI or H.O. w/oval intake ports; premium valve stem seals incl. Gen VI, exc. EFI & H.O. w/oval intake port PermaDry molded rubber valve cover gskts and premium valve stem seals incl.	KIT PARTE ALTA Gene V escluso EFO e H.O. con aspirazione ovale. Include paraoli valvole. Gene VI, exc. EFI e H.O. con aspirazione ovale, guarnizione coperchio punterie e paraoli inclusi.
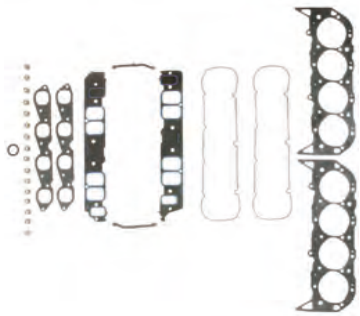	FEL17280	KIT JUNTAS SUPERIOR Gene V solo EFI juntas de retenes incluídos.	GASKET HEAD SET Gen V, EFI only, valve cover gskts and premium valve stem	KIT PARTE ALTA Gene V solo EFO, guarnizione in gomma del coperchio. Include paraoli valvole.
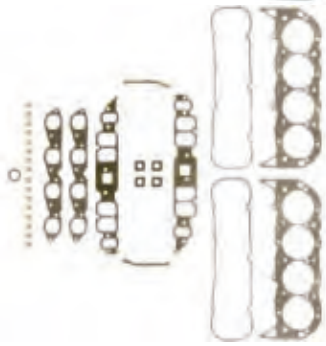	FEL17243	KIT JUNTAS SUPERIOR Gene V solo H.O. con admisión rectangular, juntas tapa válvulas y retenes incluídos.	GASKET HEAD SET Gen V, H.O. only, w/rectangular intake ports valve cover gskts and premium valve stem seals incl.	KIT PARTE ALTA Gene V solo H.O. con aspirazione rettangolare, guarnizione coperchio punterie e paraoli inclusi.
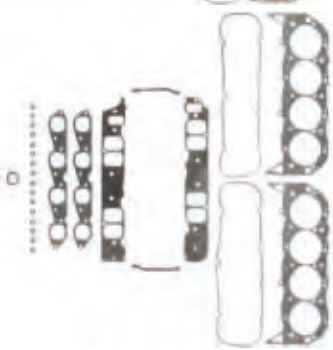	FEL17205	KIT JUNTAS SUPERIOR Gene VI só lo EFI juntas de tapa válvulas y retenes incluídos.	GASKET HEAD SET Gen VI, EFI only, valve cover gskts and premium valve stem seals incl.	KIT PARTE ALTA Gene VI, solo EFI guarnizione rettangolare, guarnizione coperchio punterie e paraoli inclusi.
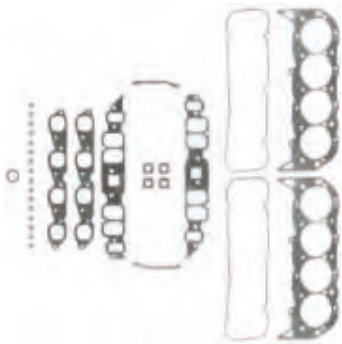	FEL17201	KIT JUNTAS SUPERIOR Gene VI solo H.O. con admisión rectangular, juntas de tapa válvulas y retenes incluídos.	GASKET HEAD SET Gen VI, H.O. only,w/rectangular intake ports valve cover gskts and premium valve stem seals incl.	KIT PARTE ALTA Gene VI, solo H.O. con aspirazione coperchio punterie e paraoli inclusi.

	Ref	Descripción	Description	Descrizione
		INFERIOR	**CONVERSION**	**PARTE BASSA**
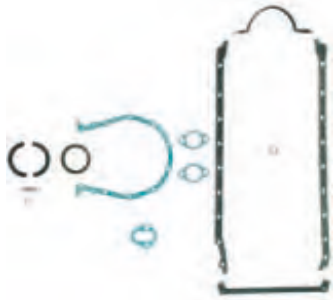	**FEL17140**	KIT JUNTAS INFERIOR Gene IV con retén trasero de dos piezas y junta cárter de 4 piezas.	CONVERSION GASKET SET Gene IV w/two piece rear main bearing seal & four piece oil pan gskt.	KIT PARTE BASSA Gene IV con paraolio posteriore in 2 pz. e guarnizione coppa dell'olio in 4 pz.
	FEL17145	KIT JUNTAS INFERIOR Gene V con retén trasero de una pieza y junta cárter de 1 pieza. Junta cárter incluída.	CONVERSION GASKET SET Gene V w/one piece rear main bearing seal & one piece oil pan gskt. oil pan gskt. incl.	KIT PARTE BASSA Gene V con paraolio posteriore in 1 pz. e guarnizione coppa dell'olio in 1 pz.
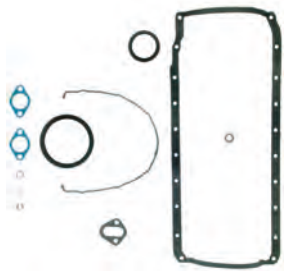	**FEL17146**	KIT JUNTAS INFERIOR Gene VI con retén trasero de una pieza y junta cárter de 1 pieza. Junta cárter incluída.	CONVERSION GASKET SET Gene VI w/one piece rear main bearing seal & one piece oil pan gskt. oil pan gskt. incl.	KIT PARTE BASSA Gene VI con paraolio posteriore in 1 pz. e guarnizione coppa dell'olio in gomma PermaDry in 1 pz.
		COLECTOR ADMISIÓN-ESCAPE	**MANIFOLD INTAKE & EXHAUST**	**ASPIRAZIONE - SCARICO**
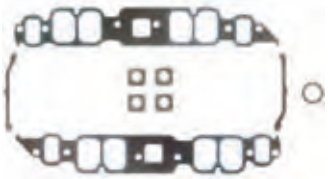	**FEL17341**	KIT JUNTA ADMISIÓN Gene IV, V y VI sólo H.O. con admisión rectangular. Gene IV,excl. H.O. con admisión rectangular.	INTAKE GASKET SET Gene IV, V & VI, H.O. only w/ rectangular intake ports Gene IV excl. H.O. w/rect. intake ports	KIT GUARNIZIONI ASPI-RAZIONE Gene IV, V e VI solo H.O. con aspirazione rettangolare Gene IV escluso H.O. con aspirazione rettangolare
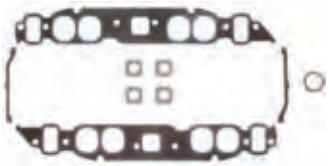	**FEL17340**	KIT JUNTA ADMISIÓN Gene IV,excl. H.O. con admisión oval. Gene V y VI exc. EFI y H.O. con admisión ovalada.	INTAKE GASKET SET Gene IV excl. H.O. w/oval intake ports Gene V & VI, excl. EFI & H.O.w/oval intake ports	KIT GUARNIZIONI SCARICO Gene IV escluso H.O. con aspirazione ovale. Gene V e VI escluso EFI e H.O. con aspirazione ovale
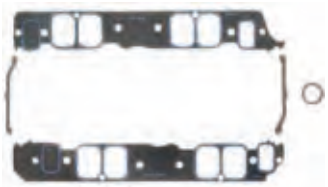	**FEL17342**	KIT JUNTA ADMISIÓN Gene V y VI sólo EFI	INTAKE GASKET SET Gene V & VI, EFI only	KIT GUARNIZIONI SCARICO Gene V e VI, solo EFI
	FEL17440	KIT JUNTA ESCAPE Gene IV, V y VI.	EXHAUST GASKET SET Gene IV, V & VI	KIT GUARNIZIONI SCARICO Gene IV, V e VI
		RETÉN TRASERO CIGÜEÑAL	**CRANKSHAFT REAR SEAL**	**PARAOLIO POSTERIORE ALBERO MOTORE**
	FEL17740	Gene IV Retén Contrarrotación; dos piezas	Gene IV Reverse rotation oil seal. Two-pieces	Gene IV Controrotante in 2 pz.

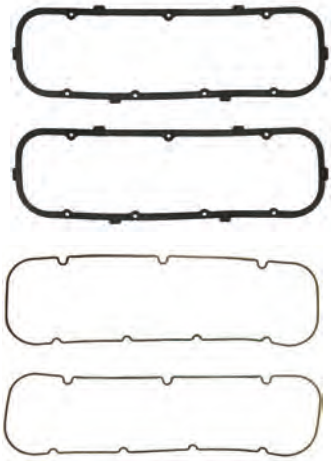

Ref	Descripción	Description	Descrizione
	TAPA VÁLVULAS	**VALVE COVER**	**COPERCHIO VALVOLE**
FEL17935	KIT JUNTA Gene IV	GASEKT SET Gene IV	KIT GUARNIZIONI Gene IV
FEL17937	KIT JUNTA Gene V & VI	GASEKT SET Gene V & VI	KIT GUARNIZIONI Gene V e VI

8.2L 502 V8 HP465 (465 HP GEN. V) HP 600 SC (550HP GEN. V)
8.5L (-D857199) (400 HP GEN. IV)
8.2L (D857200 - F819619) (400 HP GEN.V)
500 (470 HP GEN V)
502 MAGNUM BRAVO (-D824588) (390HP GEN IV)
502 MAGNUM BRAVO (D824589+) (390 & 415 HP GEN. V)

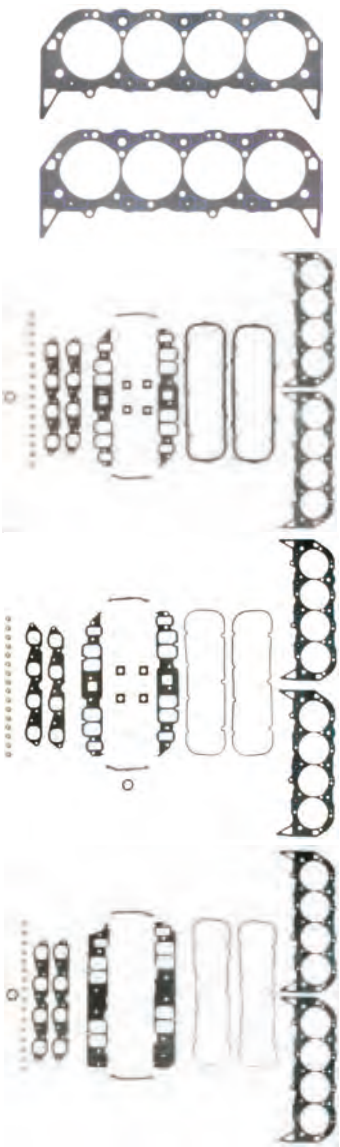

Ref	Descripción	Description	Descrizione
	CULATA	**CYLINDER HEAD**	**TESTATA**
FEL17049	JUNTA CULATA Gene IV, V & VI super medida Se necesitan 2.	CYLINDER HEAD Gene IV, V & VI super bore. 2 required	GUARNIZIONE TESTATA Gene IV , V e VI maggiorata, necessita 2
FEL17048	JUNTA CULATA Gene IV, V & VI .Se necesitan 2.	CYLINDER HEAD Gene IV, V & VI. 2 required	GUARNIZIONE TESTATA Gene IV, V e VI. necessita 2
FEL17248	KIT JUNTAS SUPERIOR Gene IV. Se incluye retenes de válvula.	GASKET HEAD SET Gene IV. premium valve stem seals incl.	KIT PARTE ALTA Gene IV. Se include paraoli valvole.
FEL17249	KIT JUNTAS SUPERIOR Gene V exc. EFI. Se incluye retenes de válvula y juntas tapa válvulas.	GASKET HEAD SET Gen V exc. EFI; premium valve stem seals & valve cover gskts. incl.	KIT PARTE ALTA Gene IV escluso EFI. Include paraolio e guarnizione del coperchio valvola
FEL17281	KIT JUNTAS SUPERIOR Gene V solo EFI. Se incluye retenes de válvula y juntas tapa válvulas.	GASKET HEAD SET Gen V EFI only; premium valve stem seals & valve cover gskts. incl.	KIT PARTE ALTA Gene V solo EFI. Include paraolio e guarnizione del coperchio valvola

	Ref	Descripción	Description	Descrizione
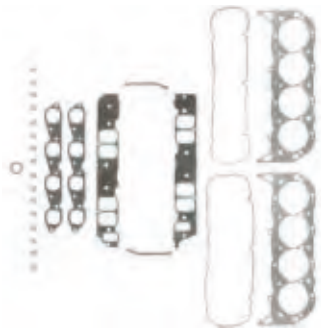	FEL17207	KIT JUNTAS SUPERIOR Gene VI solo EFI. Se incluye retenes de válvula y juntas tapa válvulas	GASKET HEAD SET Gen VI EFI only; premium valve stem seals & valve cover gskts. incl.	KIT PARTE ALTA Gene VI solo EFI. Include paraolio e guarnizione del coperchio valvola
		INFERIOR	**CONVERSION**	**PARTE BASSA**
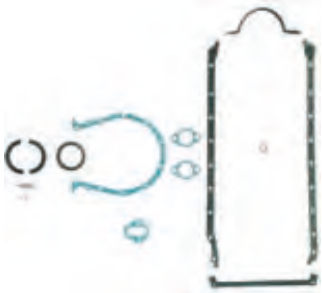	FEL17140	KIT JUNTAS INFERIOR Gene IV con retén trasero de dos piezas y junta cárter de 4 piezas.	CONVERSION GASKET SET Gene IV w/two piece rear main bearing seal & four piece oil pan gskt.	KIT PARTE BASSA Gene IV con paraolio posteriore in 2 pz. e guarnizione coppa dell'olio in 4 pz.
	FEL17145	KIT JUNTAS INFERIOR Gene V con retén trasero de una pieza y junta cárter de 1 pieza. Junta cárter de goma PermaDry incluída.	CONVERSION GASKET SET Gene V w/one piece rear main bearing seal & one piece oil pan gskt. PermaDry molded rubber oil pan gskt. incl.	KIT PARTE BASSA Gene V con paraolio posteriore in 1 pz. e guarnizione coppa dell'olio in 1 pz.
	FEL17146	KIT JUNTAS INFERIOR Gene VI con retén trasero de una pieza y junta cárter de 1 pieza. Junta cárter incluída.	CONVERSION GASKET SET Gene VI w/one piece rear main bearing seal & one piece oil pan gskt. oil pan gskt. incl.	KIT PARTE BASSA Gene VI con paraolio posteriore in 1 pz. e guarnizione coppa dell'olio in 1 pz.
		COLECTOR ADMISIÓN-ESCAPE	**MANIFOLD INTAKE & EXHAUST**	**ASPIRAZIONE - SCARICO**
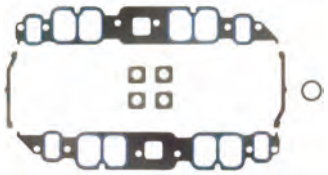	FEL17341	KIT JUNTA ADMISIÓN Gene IV Gene V,excl. EFI	INTAKE GASKET SET Gene IV Gene V excl. EFI	KIT GUARNIZIONI ASPIRAZIONE Gene IV Gene V escluso EFI
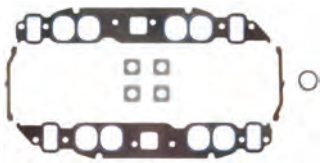	FEL17340	KIT JUNTA ADMISIÓN Gene V y VI sólo EFI	INTAKE GASKET SET Gene V & VI, EFI only	KIT GUARNIZIONI SCARICO Gene V e VI solo EFI
		RETÉN TRASERO CIGÜEÑAL	**CRANKSHAFT REAR SEAL**	**PARAOLIO POSTERIORE ALBERO MOTORE**
	FEL17740	Gene IV Retén Contrarrotación; dos piezas	Gene IV Reverse rotation oil seal. Two-pieces	Gene IV Controrotante in 2 pz.

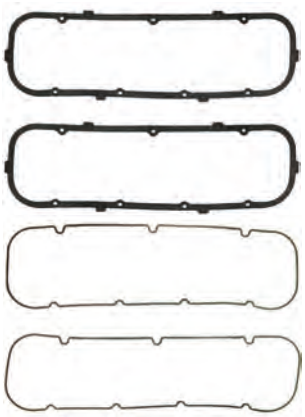

Ref	Descripción	Description	Descrizione
	TAPA VÁLVULAS	VALVE COVER	COPERCHIO VALVOLE
FEL17935	KIT JUNTA Gene IV	GASEKT SET Gene IV	KIT GUARNIZIONI Gene IV
FEL17937	KIT JUNTA Gene V & VI	GASEKT SET Gene V & VI	KIT GUARNIZIONI Gene V e VI

JUNTAS DISTRIBUCIÓN
TIMING GASKETS
GUARNIZIONE DISTRIBUZIONE

Ref.	R.O. OEM
REC27-34895A2	27-34895A2

MOTORES / ENGINES / MOTORI
GM 305 & 350 CID, 200, 225, 228, 230, 250, 255, 260, 270, 280 HP
898 (198 HP), 5.7 (SKY)
(-1997)

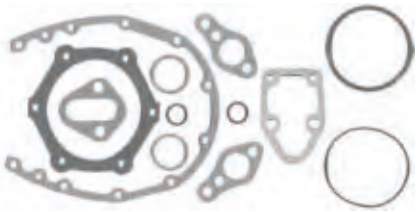

Ref.	R.O. OEM
REC27-54529A1	27-54529A1

MOTORES / ENGINES / MOTORI
GM 454 CID
325, 330, 340 & 350
300 TRS
(-1991)

TAPA DISTRIBUICIÓN
TIMING CHAIN COVER
CARTER

Ref.	R.O. OEM
REC27-49953	27-49953

MOTORES / ENGINES / MOTORI
4 & 6 Cyl.
GM120, 140, 160/165, 2.5L, 3.0LX/L
(1963+)

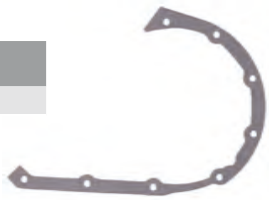

Ref.	R.O. OEM
REC27-850456	27-85046

MOTORES / ENGINES / MOTORI
454, 502 / 7.4 & 8.2L GEN V & VI (1996+)
Race Sterndrive 500, 520, 525,
540, 565, 575, 600, 662, 700

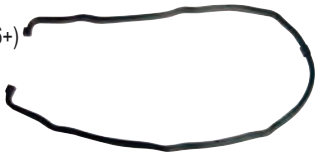

Ref.	R.O. OEM
REC27-54529	27-54529

MOTORES / ENGINES / MOTORI
454 CID
427, 454, 482, 502 (-1992)

Ref.	R.O. OEM
REC27-56108	27-56108

MOTORES / ENGINES / MOTORI
FORD V8 302, 351
(1970-77)

Ref.	R.O. OEM
REC27-68714A6	27-68714

MOTORES / ENGINES / MOTORI
224 CID
165, 170, 180, 190, 470, 485 & 488

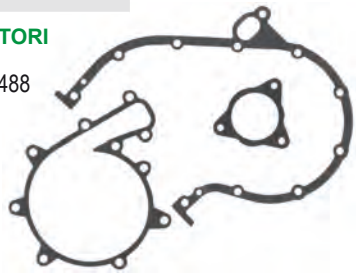

Ref.	R.O. OEM
REC27-14250	27-14250

MOTORES / ENGINES / MOTORI
V6 & V8 (-1997)

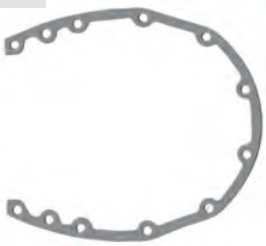

RETENES
SEALS
TENUTE

GUIA RETENES ACEITE
OIL SEALS GUIDE
GUIDA PARAOLIO

REF.	R.O. OEM	Ø EJE (") SHAFT Ø (") Ø ASSE (")	Ø EXTERIOR (") OUTER Ø (") Ø ESTERNO (")
REC26-12224	26-12224	1.1875	1.6875
REC26-12709	26-12709	0.5000	0.6875
REC26-76868	26-14077	1.1875	1.6875
REC26-14240	26-14240	3.8125	4.5000
REC26-16977	26-16977	0.8750	1.2500
REC908855	26-20070	0.6250	1.0000
REC26-23517	26-23517	0.7500	1.2500
REC310599	26-26226	1.0000	1.5000
REC26-30530	26-30530	0.5625	1.0000
REC26-30913	26-30913	0.5000	1.1875
REC26-24590	26-31249	0.3750	0.5625
REC26-32511	26-32511	1.2500	2.0000
REC26-32911	26-32911	1.1250	1.2500
REC26-33467	26-33467	0.6250	1.1250
REC26-419533	26-41953	1.1875	1.8750
REC26-43035	26-43035	1.0625	1.4375
REC26-43036	26-43036	1.0312	1.4687
REC26-455771	26-45577 1	0.3125	0.4375
REC26-45587	26-45587	0.3750	0.6250
REC26-48443	26-48443	0.7500	1.3750
REC26-55682	25-55682	1.0000	1.2500
REC26-56397	26-56397	0.7500	1.1250
REC26-56788	26-56788	0.8750	1.2500
REC26-62818	26-62818	1.6250	2.2500
REC26-66302	26-66302	1.2500	1.8750
REC26-69188	26-69188	0.8750	1.2500
REC26-69189	26-69189	0.8750	1.3125
REC26-70081	26-70081	1.1875	1.7500
REC26-72785	26-72785	0.7500	1.8750
REC26-76868	26-76868	1.1875	1.6875
REC26-79831	26-79831	0.7500	1.1250
REC26-861694	26-805080	2.5000	3.1875
REC26-807006	26-807006	1.6875	2.2500
REC26-8164641	26-8164641	0.3750	0.7500
REC26-821092	26-821092	1.5000	2.2500
REC26-823894	26-823894	2.2500	3.0000
REC26-24590	26-892361	0.3750	0.7500
REC26-89238	26-89238	0.8750	1.5000
REC26-90562	26-90562	0.7500	1.2500
REC26-94038	26-94038	1.0000	1.5000
REC26-897153	26-96063	0.4375	0.8750
REC26-965031	26-965031	0.8750	1.3750
REC26-43993	26-43993	1.640	2.132
REC26-67388	26-67388	1.800	3.100
REC26-33467	26-33467	0.625	1.125
REC26-16977	26-16977	0.875	1.250
REC26-24590	26-24590	0.400	0.566
REC26-55682	26-55682	1.000	1.253

Medidas en Pulgadas / Diameters in Inches / Misure in pollici 1" = 25,4 mm

GUIA AROS TÓRICOS
O-RINGS GUIDE
GUIDA ANELLI TENUTE

REF.	R.O. OEM	REF.	R.O. OEM
REC25-20081	25-20081	REC301967	25-36318
REC25-16524	25-20415	REC25-38099	25-38099
REC25-16524	25-16524	REC25-38101	25-38101
REC308627	25-20826	REC25-38933	25-38933
REC25-80863	25-20863	REC326849	25-39695
REC25-21836	25-21836	REC25-457101	25-457101
REC125017	25-23145	REC326649	25-45711
REC25-25439	25-25439	REC310414	25-47254
REC333572	25-26543	REC0554545	25-47632
REC302588	25-26722	REC25-48171	25-48171
REC303347	25-26802	REC302035	25-48452
REC3852928	25-26855	REC25-33465	25-54029
REC309731	25-29439	REC25-55801	25-55801
REC25-30224	25-30224Q	REC909140	25-58390
REC25-30529	25-30529	REC25-62700	25-62700
REC25-30613	25-30613	REC3852045	25-62704
REC553126	25-31305	REC25-62705	25-62705
REC3852866	25-31986	REC25-62706	25-62707
REC304174	25-32509	REC25-823683	25-823683
REC25-32546	25-32546	REC333572	25-64068
REC25-33145	25-33145	REC331188	25-65936
REC25-33465	25-33465	REC313175	25-67202
REC302537	25-33466	REC25-67202	25-67202
REC0307239	25-33504	REC25-70937	25-70937
REC305123	25-33756	REC3852865	25-805331
REC25-35029	25-35029	REC25-89497	25-89497
REC310584	25-35276	REC25-90011	25-90011
REC321921	25-35480	REC25-97387	25-97387

RETENES VÁLVULAS
VALVE STEM SEAL
PARAOLIO VALVOLE

Ref.	R.O. OEM
REC26-34217	26-34217

MOTORES / ENGINES / MOTORI
4 en línea y 6 cil antiguos, GM V6/V8
Most inline 4 & 6 cyl. GM (early) GM V6/V8
4 en linea e 6 cil vecchio mod. GM V6/V8

Ref.	R.O. OEM
REC26-75988	26-75988

MOTORES / ENGINES / MOTORI
330 (4623115+)
340 (5889914+)
454 Mag d(A631894+)

VÁLVULA ADMISIÓN
INTAKE VALVE
VALVOLA ASPIRAZIONE

Ref.	R.O. OEM
REC70817B	26-97664 26-976641 26-8M0050563

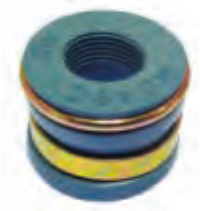

MOTORES / ENGINES / MOTORI
4.3L, 5.0L, & 5.7L old & MPI
(1983-97)

ADMISIÓN Y ESCAPE
INTAKE & EXHAUST VALVE
ASPIRAZIONE E SCARICO

Ref.	R.O. OEM
REC26-75624	26-75624 26-75413

MOTORES / ENGINES / MOTORI
165, 170, 180, 190 4 CIL. (224 cid) (6916779+)
888 (2bbl) Ford 302 V8 (1971-77)
3.7 L, LX (1980-89)
470 (1976-81) 488 (1983-84)

RETENES CIGÜEÑAL
CRANKSHAFT OIL SEALS
PARAOLIO ALBERO MOTORE

Ref.	R.O. OEM
FELBS40013	26-814622

MOTORES / ENGINES / MOTORI
5.0, 5.7L (-1986)

Ref.	R.O. OEM
REC26-14240	26-14240

MOTORES / ENGINES / MOTORI
4.3, 5.0, 5.7L
Standard Rot.

Ref.	R.O. OEM
REC26-14756	26-14756

MOTORES / ENGINES / MOTORI
7.4, 8.2L (1991+)

Ref.	R.O. OEM
REC3853341	36-97335
REC26-8219471	26-8219471
REC26-67388	26-67388
REC26-8219471	26-8219471

Ref.	R.O. OEM
REC26-14240	26-14240
REC26-811554	26-811554
REC26-90925	26-90925
RM26-879194364	
FEL17725	

Ref.	R.O. OEM
FEL17740	26-75980

GUIA RETENES CIGÜEÑAL
CRANKSHAFT OIL SEALS GUIDE
GUIDA PARAOLIO ALBERO MOTORE

MODELO MODEL MODELLO	SERIE SERIAL SERIE	TRASER REAR POSTERIORE	DELANTERO FRONT ANTERIORE
120/2.5L	1666601		REC3853341
120/2.5L	2786857	FELBS40013	REC3853341
140/3.0L & LX	2508261		REC3853341
140/3.0L & LX	6229718	FELBS40013	REC3853341
150, 160, 165, 200 (I/L-6)	1666495+		REC3853341
150, 160, 165, 200 (I/L-6)	2770032+	FELBS40013	REC3853341
175, 185, 205, 262 4.3L (V-6)	6330183+	FELBS40013	REC3853341
200, 228, 225, 230, 250, 255, 260, 270, 280, 300, 320 5.0L/5.7L/898 (V-8)	2453769+	FELBS40013	REC3853341
224I/L4		REC26-90925	REC26-67388
5.0L, 5.7L, 4.3L, 3.0L Rotación standard. 1 pieza STD Rotation. 1 piece Rotazione STD. 1 peze		REC26-14240	REC3853341
340 (7.4L)	4623115+	FEL17740	REC26-8219471
370 TRS	5889914		REC26-8219471
400 TRS	4179554		REC26-8219471
420	A398941+		REC26-8219471
440 TRS	4179554		REC26-8219471
454 MAGNUM	A631894+		REC26-8219471
460 TRS	4179554		REC26-8219471
7.4, 8.2L, 454, 502 Rotación standard. 1 pieza STD Rotation. 1 piece Rotazione STD. 1 peze		REC26-811554	REC26-8219471
7.4 BRAVO	B771113+		REC26-8219471

470, 485, 488, 165, 170, 180 & 190 HP
4 CYL EN LÍNEA / IN LINE / IN LINEA

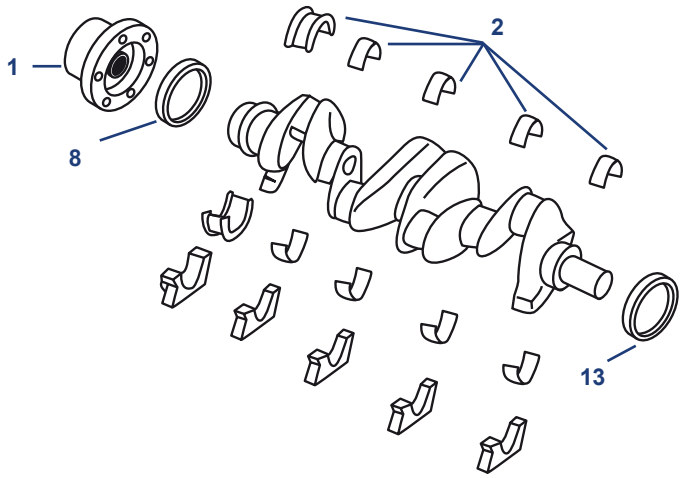

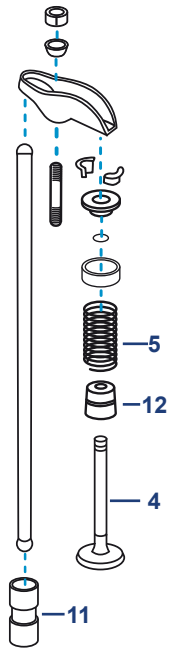

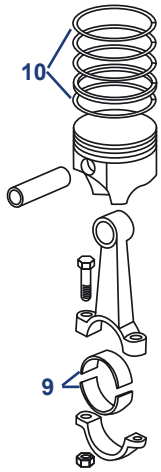

Nº
6

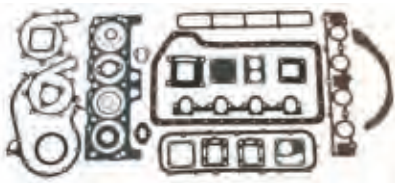

Kit juntas
Gasket set
Kit guarnizione

Nº
7

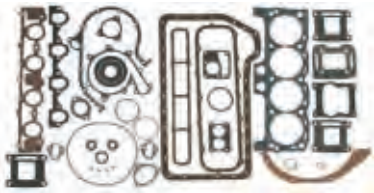

Kit juntas
Gasket set
Kit guarnizione

Nº	Ref.	R.O. OEM	Descripción	Description	Descrizione	Cantidad Quanty Quantità
1	REC97432A2	97432A2	ACOPLAMIENTO MOTOR 470 (1983-89), 165, 170, 3.7L	ENGINE COUPLER ASSEMBLY MODEL 470 (1983-89), 165, 170, 3.7L	GIUNTO PARASTRAPPI 470 (1983-89), 165, 170, 3.7L	1
1	REC69354A2	69354A2	ACOPLAMIENTO MOTOR 470 y 485 (1976-82)	ENGINE COUPLER ASSEMBLY MODEL 470 & 485 (1976-82)	GIUNTO PARASTRAPPI 470 e 485 (1976-82)	1
2	FED7205M	23-853849	KIT COJINETES BANCADA STD. TODOS LOS MOTORES	BEARING SET STD. ALL MODELS	KIT BRONZINE DI BANCO STD. TUTTI I MODELLI	1
4	FEDV-3929	75416	VÁLVULA ADMISIÓN 470	INTAKE VALVE 470	VALVOLA ASPIRAZIONE 470	4
4	RM44181A1	44181A1	VÁLVULA ADMISIÓN RESTO MOTORES EXCEPTO 485	INTAKE VALVE ALL MODELS EXCEPT 485	VALVOLA ASPIRAZIONE RESTO DEI MODELLI ECCETTO 485	4
4	FEDV-1984	44182A1	VÁLVULA ESCAPE 470	EXHAUST VALVE 470	VALVOLA SCARICO 470	4
4	RM44182A1	44182A1	VÁLVULA ESCAPE RESTO MOTORES EXCEPTO 485	EXHAUST VALVE ALL MODELS EXCEPT 485	VALVOLA SCARICO RESTO DEI MODELLI ECCETTO 485	4
5	REC24-56159	24-75411T	MUELLE VÁLVULA	SPRING VALVE	MOLLA VALVOLA	8
6	REC27-74830A3	27-74830A3	KIT JUNTAS MOTORES 224 (3.7L) 470	ENGINE GASKET SET	KIT GUARNIZIONE MOTORE 224 (3.7L) 470	1
7	REC27-43186A1	27-43186A1	KIT JUNTAS MOTORES 224 (3.7L) CID 165, 170, 180, 190 HP	ENGINE GASKET SET	KIT GUARNIZONE MOTORE 224 (3.7L) CID 165,170,180,190 HP	1
8	REC26-90925	26-90925	RETÉN TRASERO	ONCE PIECE REAR MAIN SEAL	PARAOLIO POSTERIORE	1
9	REC23-853853002	23-853853002	COJINETES BIELA STD. TODOS LOS MOTORES	ROD BEARING STD. ALL MODELS	BRONZINE DI BIELLA STD. TUTTI I MODELLI	4
9	REC23-853855001	23-853855001	COJINETES BIELA 010 TODOS LOS MOTORES	ROD BEARING 010 ALL MODELS	BRONZINE DI BIELLA 0.10 TUTTI I MODELLI	4
10	REC39-74381A1	39-74381A1	AROS PISTON STD. TODOS LOS MOTORES	PISTON RINGS STD. ALL MODELS	FASCE PISTONE STD. TUTTI I MODELLI	4
10	REC39-75423	39-75423	AROS PISTON 030 TODOS LOS MOTORES	PISTON RINGS 030 ALL MODELS	FASCE PISTONE 0.30 TUTTI I MODELLI	4
11	REC3853847	56153	LIFTER	TAPPET	LIFTER	8
12	REC26-75624	26-75624	RETÉN VÁLVULA	VALVE STEM SEAL	PARAOLIO VALVOLA	8
13	REC26-67388	26-67388	RETÉN DELANTERO CIGÜEÑAL	FRONT CRANKSHAFT SEAL	TENUTA ALBERO MOTORE	1

JUNTA TAPA VÁLVULAS
VALVE COVER GASKET
GUARNIZIONE COPERCHIO PUNTERIE

Ref.	R.O. OEM
REC27-73666	27-73666

MOTORES / ENGINES / MOTORI
224 CID (3.7 L)

JUNTA CULATA
HEAD GASKET
GUARNIZIONE TESTATA

Ref.	R.O. OEM
REC27-13709	27-13709

MOTORES / ENGINES / MOTORI
224 CID (3.7 L)
CID Model 470

JUNTA COLECTOR ESCAPE
EXHAUST MANIFOLD GASKET
GUARNIZIONE COLLETTORE SCARICO

Ref.	R.O. OEM
REC27-68715	27-68715

MOTORES / ENGINES / MOTORI
460 CID

JUNTA COLECTOR ADMISIÓN
INTAKE MANIFOLD GASKET
GUARN. COLLETTORE ASPIRAZIONE

Ref.	R.O. OEM
REC27-70905	27-70905

MOTORES / ENGINES / MOTORI
3.7 L

COLECTORES, CODOS, TAPAS Y JUNTAS
MANIFOLDS, ELBOWS, END CAPS & GASKETS
COLLETTORE, GOMITO, COPERCHIO E GUARNIZIONE

120 HP GM 153 4 CYL

COLECTOR ESCAPE
EXHAUST MANIFOLD
COLLETTORE SCARICO

Ref.	R.O. OEM
BAMC-1-63122	63122A14 63122A10 63122A13

JUNTA COLECTOR
MANIFOLD GASKET
GUARNIZIONE COLLETTORE

Ref.	R.O. OEM
FEL17300	27-52546
REC27-52546	27-52546
REC27-35898T	27-35898T

FEL17300
REC27-52546

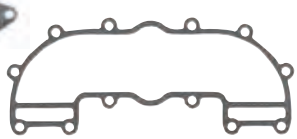

REC27-35898T

TAPA COLECTOR
END CAP ASSY
COPERCHIO COLLETTORE

Ref.	R.O. OEM
BA1-47638	47638A1
HGE4870	73813A1

BA1-47638

HGE4870

JUNTA TAPA COLECTOR
END CAP GASKET
GUARNIZIONE COPERCHIO COLLETTORE

Ref.	R.O. OEM
REC27-39917	27-39917
BAMC47-27-39923	27-39923

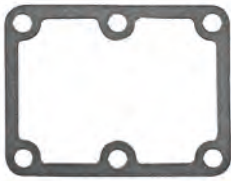

REC27-39917

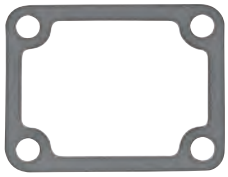

BAMC47-27-39923

CODO ESCAPE
ELBOW MANIFOLD
GOMITO DI SCARICO

Ref.	R.O. OEM
BAMC-20-55538	55538A2

JUNTA CODO
ELBOW GASKET
GUARNIZIONE GOMITO

Ref.	R.O. OEM
REC27-39915	27-39915

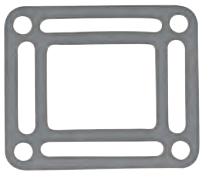

140 HP GM 181 4 CYL (1968-82)

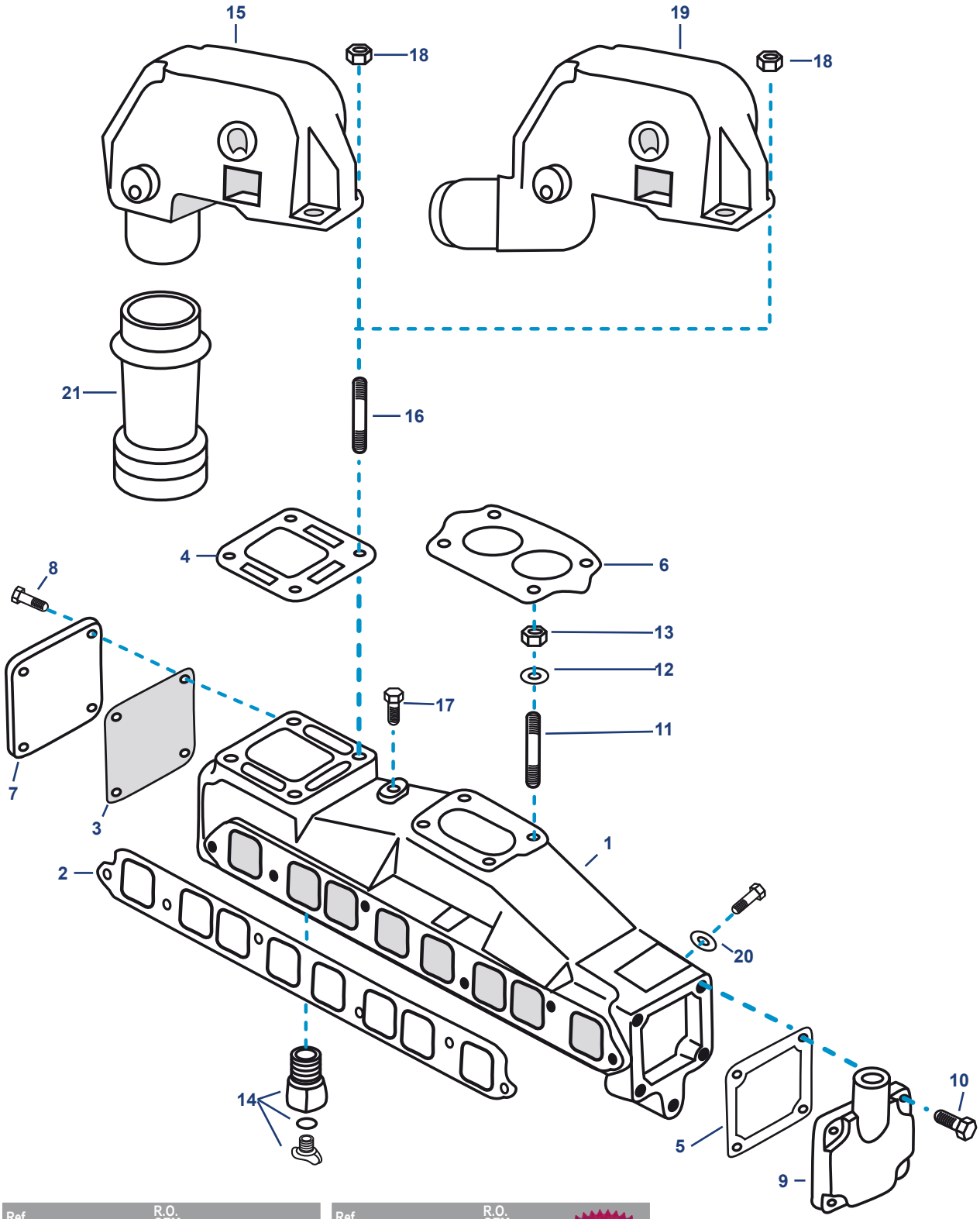

Ref.	R.O. OEM
REC18-8549	

Kit tornillos colector
Manifold bolt kit
Kit viteria collettore

Ref.	R.O. OEM
HOT26371-MK	NEW

Kit montaje
Mounting kit
Kit di montaggio

Nº	Ref.	R.O. OEM	Descripción	Description	Descrizione	Cantidad Quanty Quantità
1	**REC96705A1**	96705A1	COLECTOR	EXHAUST MANIFOLD ASSEMBLY	COLLETTORE	1
2	**REC27-53354**	27-53354	JUNTA COLECTOR	GASKET-EXHAUST MANIFOLD	GUARNIZIONE COLLETTORE	1
2	**FEL17301**	27-53354	JUNTA COLECTOR	GASKET MANIFOLD	GUARNIZIONE COLLETTORE	1
3	**REC27-807218**	27-807218	JUNTA TAPA	GASKET END CAP	GUARNIZIONE COPERCHIO	1
4	**REC27-99777Q02**	27-99777Q02	JUNTA CODO	GASKET EXHAUST MANIFOLD TO ELBOW	GUARNIZIONE INTERMEDIA	1
5	**REC27-480431**	27-480431	JUNTA TAPA	GASKET END CAP	GUARNIZIONE COPERCHIO	1
6	**REC27-64692**	27-64692	JUNTA BASE CARB.	GASKET CARBURETOR BASE	GUARNIZIONE BASE CARB.	1
7	**HGE4870**	73813A1	TAPA COLECTOR	END CAP EXHAUST MANIFOLD	COPERCHIO	1
8	**RM10-25299**	10-824941	TORNILLO TAPA	SCREW END CAP	VITE COPERCHIO	4
9	**REC60252A2**	60252A2	TAPA COLECTOR	END CAP EXHAUST MANIFOLD	COPERCHIO COLLETTORE	1
10	**REC10-35386**	10-35386	TORNILLO TAPA	SCREW END CAP	VITE COPERCHIO	4
11	**REC16-70236**	16-70236	ESPARRAGO CARBURADOR	STUD CARBURETOR	PRIGIONIERO CARBURATORE	4
12	**REC12-20084**	12-20084	ARANDELA	WASHER CARBURETOR	RONDELLA	4
13	**REC11-862902**	11-862902	TUERCA	LOCKNUT CARBURETOR	DADO	4
14	**REC13980**	22-806608A1	TORNILLO DRENAJE	STRAIGHT FITTING	VITE DI DRENAGGIO	1
NEW 15	**HOT20971**	76351A04	CODO ESCAPE 3”	EXHAUST ELBOW ASSEMBLY 3”	GOMITO DI SCARICO	1
16	**REC16-49545**	16-49545	ESPARRAGO CODO	STUD	PRIGIONIERO	4
17	**REC22-36382**	22-36382	TAPON	PLUG	TAPPO	1
18	**REC46335**	46335	TUERCA	FLANGE SERRATED NUT	DADO	4
NEW 19	**HOT20978**	76771A2	CODO ESCAPE 3”	EXHAUST ELBOW ASSEMBLY 3”	GOMITO DI SCARICO 3”	1
19	**REC76771A2**	76771A2	CODO ESCAPE 3”	EXHAUST ELBOW ASSEMBLY 3”	GOMITO DI SCARICO 3”	1
20	**REC21-20553**	21-20553	ARANDELLA	WASHER	RONDELLA	6
21	**REC53114A1**	53114A1	FUELLE ESCAPE	EXHAUST BELLOW	CUFFIA DI SCARICO	1

2.5L GM 153 4 CYL / 3.0L 4 CYL (1983-89)

MODELO ANTIGUO
OLD STYLE OPTION
MODELLO VECCHIO

MODELO MODERNO
NEW STYLE OPTION
MODELLO MODERNO

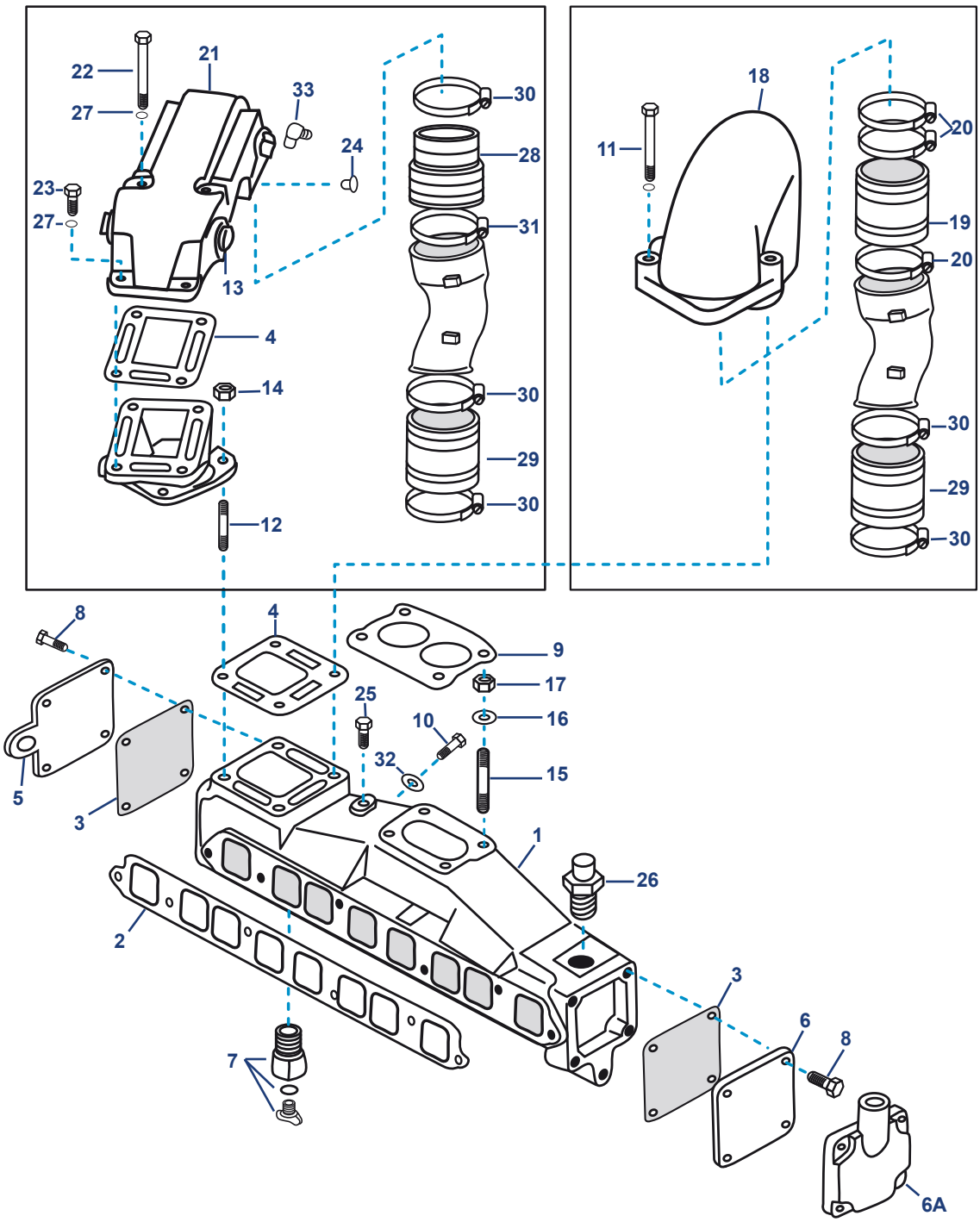

Ref.	R.O. OEM
RECK6325	

Kit tornillos codo y junta
Elbow gasket & bolt kit
Kit viteria e guanizione gomito

Ref.	R.O. OEM
HOT20956-MK	

Kit montaje colector HOT20956
Mounting kit manifold HOT20956
Kit di montaggio collettore HOT20956

Ref.	R.O. OEM
HOT20975-MK	

Kit montaje codo HOT20975
Mounting kit elbow HOT20975
Kit di montaggio gomito HOT20975

Nº	Ref.	R.O. OEM	Descripción	Description	Descrizione	Cantidad Quanty Quantità
1	**BAMC-1-95862**	95862A5	COLECTOR	EXHAUST MANIFOLD CARB. ROCHESTER	COLLETTORE	1
1	**HOT20956**	860235A04	COLECTOR	EXHAUST MANIFOLD CARB. MERCAB	COLLETTORE	1
NEW 1	**HOT20956**	860235A04	COLECTOR	EXHAUST MANIFOLD CARB.	COLLETTORE	1
2	**REC27-96429**	27-96429	JUNTA	GASKET EXHAUST MANIFOLD	GUARNIZIONE SCARICO	1
3	**REC27-807218**	27-807218	JUNTA	GASKET END CAP	GUARNIZIONE COPERCHIO COLLETTORE	2
4	**REC27-99777Q02**	27-99777Q02	JUNTA	GASKET EXHAUST MANIFOLD TO ELBOW OR ADAPTOR	GUARNIZIONE RISER	2
5	**REC805629A1**	805629A1	TAPA	END CAP EXHAUST MANIFOLD	COPERCHIO COLLETTORE	1
6	**HGE4870**	73813A1	TAPA	END CAP - EXHAUST MANIFOLD	COPERCHIO COLLETTORE	1
6A	**REC60252A2**	60252A2	TAPA COLECTOR	MANIFOLD CAP	COPERCHIO COLLETTORE	1
7	**REC13980**	22-806608A1	TORNILLERIA	STRAIGHT FITTING	VITERIA	1
8	**RM10-25299**	10-824941	TORNILLO	SCREW END CAP TO EXHAUST MANIFOLD	VITE	8
9	**REC27-8079821**	27-8079821	JUNTA (MERCAB)	GASKET CARBURETOR BASE (MERCAB)	GUARNIZIONE CARBURATORE (MERCAB)	1
9	**REC27-64692**	27-64692	JUNTA (ROCHESTER)	GASKET CARBURETOR BASE (ROCHESTER)	GUARNIZIONE CARBURATORE (ROCHESTER)	1
10	**REC10-53728**	10-53728	TORNILLO	SCREW (NEW DESIGN)	VITE	3
11	**REC10-668631**	10-668631	TORNILLO	SCREW	VITE	2
12	**REC16-56826**	16-56826	ESPARRAGO	STUD	PRIGIONIERO	4
13	**REC22-41622**	22-41622	TAPON	PLUG EXHAUST ELBOW	TAPPO	4
14	**REC46335**	46335	TUERCA	FLANGE SERRATED NUT	DADO	4
15	**REC16-70236**	16-70236	ESPARRAGO	STUD CARBURETOR	PRIGIONIERO	4
16	**REC12-20084**	12-20084	ARANDELA	WASHER CARBURETOR	RONDELLA	4
17	**REC11-862902**	11-862902	CIERRE	LOCK NUT CARBURETOR	CHIUSURA	4
18	**MAR076**	12076A2	CODO	EXHAUST ELBOW ASSEMBLY	GOMITO	1
18	**SED3092610**	12076A2	CODO ESCAPE INOX	STAINLESS STEEL EXHAUST ELBOW	GOMITO SCARICO INOX	1
NEW 18	**HOT20975**	12076A2	CODO	EXHAUST ELBOW ASSEMBLY	GOMITO	1
19	**REC32-44348001**	32-44348001	FUELLE	EXHAUST BELLOW EXHAUST ELBOW 4”	CUFFIA	1
20	**GS38320**	54-815504372	ABRAZADERA 4”	CLAMP BELLOW 4”	FASCETTA 4”	2
21	**REC76325A2**	76325A2	CODO	EXHAUST ELBOW ASSEMBLY	GOMITO	1
22	**REC10-72094**	10-72094	TORNILLO	SCREW EXHAUST ELBOW	VITE	2
23	**REC10-34354**	10-34354	TORNILLO	SCREW EXHAUST ELBOW	VITE	2
24	**REC22-328022**	22-328022	TAPÓN	PLUG	TAPPO	1
25	**REC22-36382**	22-36382	TAPÓN	PLUG	TAPPO	1
26	**REC22-866725**	22-866725	ENTRONQUE 3/4-14x1 (LATÓN)	STRAIGHT FITTING 3/4-14 x 1 (BRASS)	RACCORDO 3/4-14x1 (OTTONE)	1
27	**REC13-35048**	13-35048	ARANDELA	LOCKWASHER	RONDELLA	4
28	**REC70981A3**	70981A3	FUELLE	EXHAUST BELLOW (USE WITH 2-PIECE EXHAUST ELBOW)	CUFFIA	1
29	**REC32-90949T**	32-90949T	FUELLE	EXHAUST TUBE	CUFFIA	1
30	**GS38320**	54-815504256	ABRAZADERA	HOSE CLAMP	FASCETTA	3
31	**GS38322**	54-815504372	ABRAZADERA	HOSE CLAMP	FASCETTA	1
32	**REC21-20553**	21-20553	ABRAZADERA	WASHER	FASCETTA	2
33	**REC13960**		CODO	ELBOW FITTING	GOMITO	1
34	**REC13-35048**	13-35048	ARANDELA	WASHER	RONDELLA	4

Para determinar el tipo de carburador (Rochester / Mercab) ver medida de junta:
To determine the type of carburetor (Rochester / Mercab) see joint measurement:
Per determinare il tipo di carburatore (Rochester / Mercab) vedi misurazione di guarnizione:

PAG 124

3.0L & 3.0LX GM 181 4 CYL (1990+)

Ref.	R.O. OEM
HOT20975-MK	

Kit montaje codo HOT20975
Mounting kit elbow HOT20975
Kit di montaggio gomito HOT20975

NEW

Ref.	R.O. OEM
HOT20966-MK	

Kit montaje colector
Mounting kit manifold
Kit di montaggio collettore

NEW

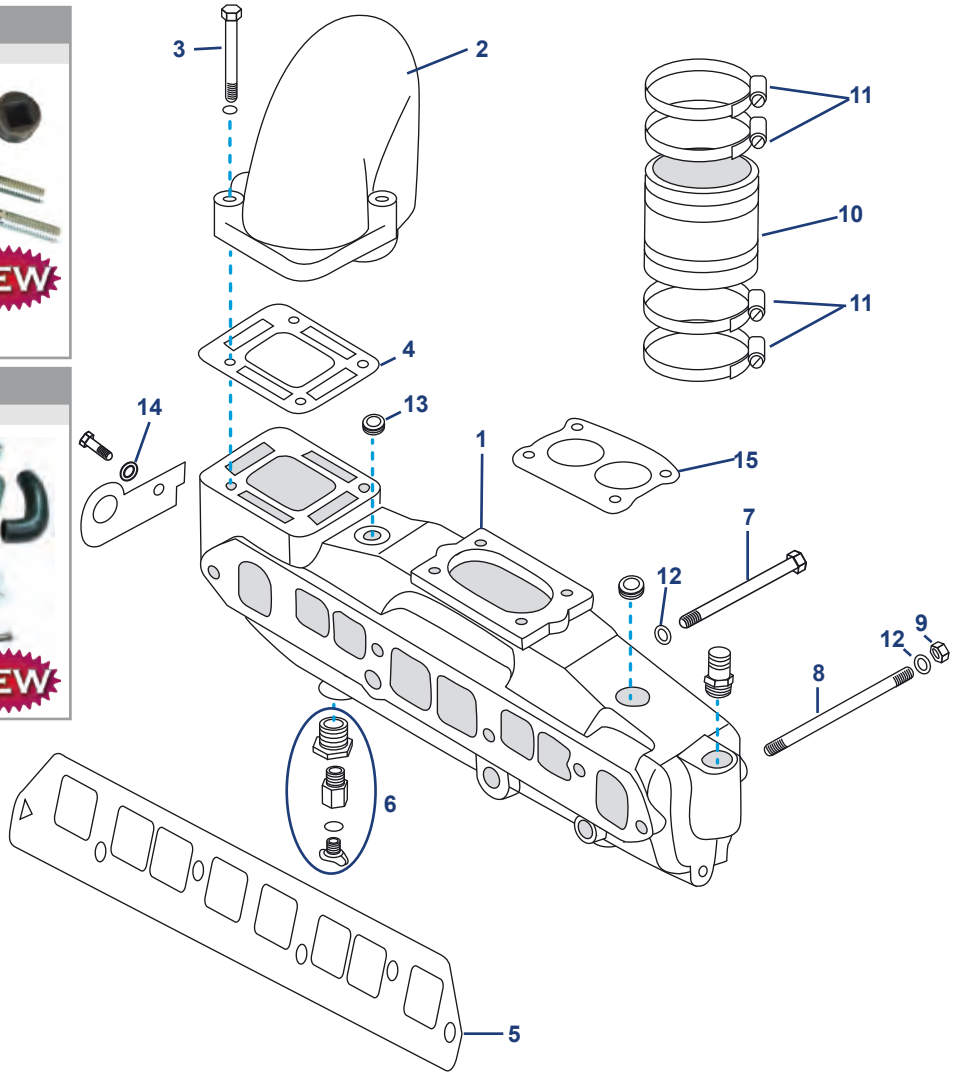

Nº	Ref.	R.O. OEM	Descripción	Description	Descrizione	Cantidad Quanty Quantità
1	BAMC-1-860235	860235A03	COLECTOR Sustituye al 806867A12	EXHAUST MANIFOLD Replaces 806867A12	COLLETTORE Sostituisce 806867A12	1
NEW 1	HOT20966	860235A03	COLECTOR ESCAPE	EXHAUST MANIFOLD	COLLETTORE DI SCARICO	1
2	MAR076	12076A2	CODO ESCAPE	EXHAUST ELBOW	GOMITO DI SCARICO	1
NEW 2	HOT20975	12076A2	CODO ESCAPE	EXHAUST ELBOW	GOMITO DI SCARICO	1
2	SED3092610	12076A2	CODO ESCAPE INOX	EXHAUST ELBOW STAINLESS STEEL	GOMITO DI SCARICO INOX	1
3	REC10-668631	10-668631	TORNILLO	SCREW	VITE	2
4	REC27-99777Q02	27-99777Q02	JUNTA CODO	GASKET EXHAUST MANIFOLD TO ELBOW	GUARNIZIONE COLLETTORE / GOMITO	1
5	REC27-815528	27-815528	JUNTA COLECTOR	GASKET EXHAUST MANIFOLD	GUARNIZIONE COLLETTORE	1
5	FEL17304	27-815528	JUNTA COLECTOR	GASKET EXHAUST MANIFOLD	GUARNIZIONE COLLETTORE	1
6	REC13980	22-806608A1	TORNILLERÍA	STRAIGHT WATER DRAINING	VITERIA	1
7	REC10-53728	10-53728	TORNILLO	SCREW	VITE	2
8	REC16-806300	16-806300	ESPARRAGO	STUD	PRIGIONIERO	3
9	REC46335	46335	TUERCA	FLANGE SERRATED NUT	DADO	3
10	REC32-44348001	32-44348001	FUELLE CODO ESCAPE	EXHAUST BELLOW 4”	CUFFIA GOMITO DI SCARICO	1
11	GS38320	54-815504256	ABRAZADERA FUELLE	CLAMP 4”	FASCETTA	2
12	REC21-20553	21-20553	ARANDELA	WASHER	RONDELLA	5
13	REC22-32803	22-32803	TAPÓN	CAP	TAPPO	1
14	REC12-20084	12-20084	ARANDELA	WASHER	RONDELLA	1
15	REC27-8079821	27-8079821	JUNTA CARBURADOR MERCAB (NO TKS)	CARBURATOR GASKET MERCAB (NO TKS)	GUARNIZIONE CARBURATORE MERCAB (NO TKS)	1

165, 170, 180, 190, 470, 485, 488
3.7L & 3.7LX MCM 224 CID 4 CYL (1980-89)

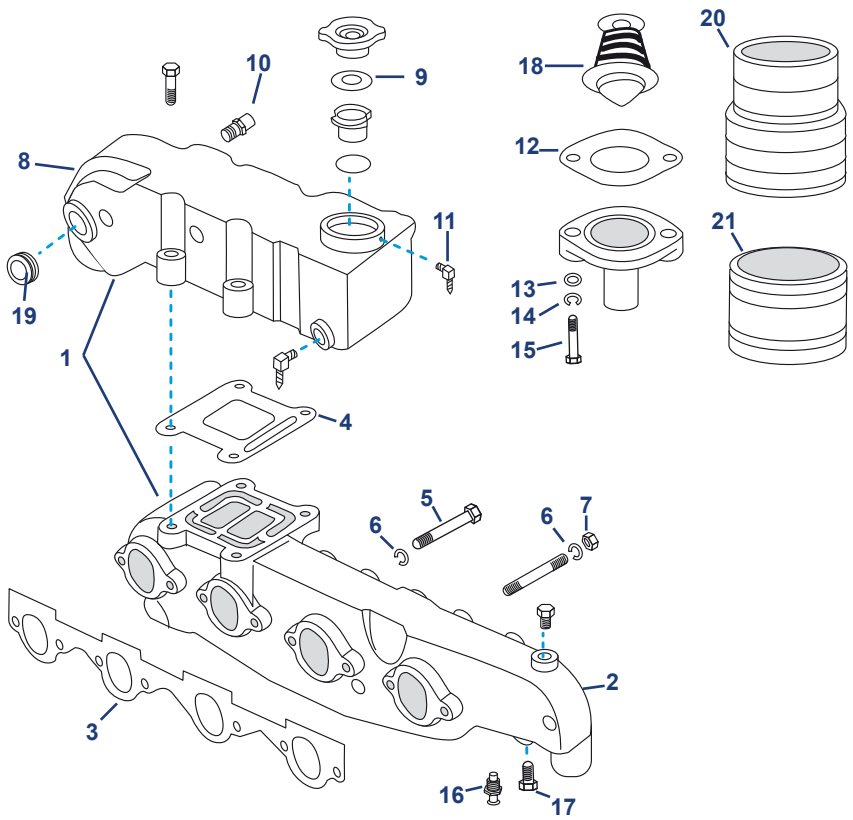

Ref.	R.O. OEM
RECK0879	

Kit para colector de fundición
Kit for cast iron manifold
Kit viteria per collettori in ghisa

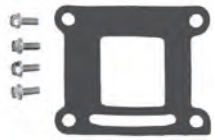

Ref.	R.O. OEM
HOT20905-MK	

Kit montaje codo HOT20905
Mounting kit elbow HOT20905
Kit di montaggio gomito HOT20905

NEW

Ref.	R.O. OEM
HOT20937-MK	

Kit montaje codo HOT20937
Mounting kit elbow HOT20937
Kit di montaggio gomito HOT20937

NEW

Nº	Ref.	R.O. OEM	Descripción	Description	Descrizione	Cantidad Quanty Quantità
1	**RM816219A4**	816219A4	KIT CODO/COLECTOR	EXHAUST ELBOW/MANIFOLD	KIT COLLETTORE+GOMITO	1
2	**HGE6219-A**	816219A5	COLECTOR ALUMINIO	EXHAUST MANIFOLD (ALUM)	COLLETTORE IN ALLUMINIO	1
3	**REC27-68715**	27-68715	JUNTA COLECTOR ESCAPE	GASKET - EXHAUST MANIFOLD	GUARNIZIONE COLLETTORE SCARICO	1
4	**REC27-18272**	27-18272	JUNTA CODO A COLECTOR	GASKET - ELBOW TO MANIFOLD	GUARNIZIONE COLLETTORE GOMITO	1
4	**REC27-856705**	27-856705	JUNTA COLECTOR DE HIERRO	GASKET FOR IRON MANIFOLD	GUARNIZIONE PER COLLETORE IN GHISA	1
5	**REC22-73379**	10-74727	TORNILLO	SCREW	VITE	3
6	**REC13-35048**	13-35048	CIERRE	LOCKWASHER	RONDELLA	3
7	**REC46335**	46335	TUERCA	FLANGE SERRATED NUT	DADO	1
NEW 8	**HOT20937**	98562A6	CODO PARA COLECTOR ALUMINIO	EXHAUST ELBOW FOR ALUM. MANIFOLD	GOMITO PER COLLETTORI IN ALLUMINO	1
NEW 8	**HOT20905**	90880A2	CODO PARA COLECTOR HIERRO	ELBOW FOR CAST. MANIFOLD	GOMITO PER COLLETTORI IN GHISA	1
9		27-71614	JUNTA TAPA	GASKET FILLER CAP	GUARNIZIONE	1
10	**REC22-866725**	22-866725	RACOR COLECTOR	HOSE FITTING	RACCORDO COLLETTORE	1
11	**REC22-76170**	22-76170	RACOR CODO 90º	ELBOW FITTING 90º	RACCORDO GOMITO 90º	1
12	**REC27-89656-1**	27-896561	JUNTA	GASKET	GUARNIZIONE	1
13		12-26825	ARANDELA	WASHER	RONDELLA	2
14	**REC13-39107**	13-39107	CIERRE	LOCKWASHER	CHIUSURA	2
15	**REC10-73657**	10-73657	TORNILLO	SCREW	VITE	2
16	**REC15995**	15995	SENSOR TEMPERATURA	TEMPERATURE SENDER	SENSORE TEMPERATURA	1
17	**REC22-32803**	22-32803	TAPÓN	PLUG	TAPPO	1
18	**REC99155T2**	99155T2	TERMOSTATO	THERMOSTAT	TERMOSTATO	1
19	**REC22-428611**	22-428611	TAPÓN	CAP	TAPPO	1
20	**REC70981A3**	70981A3	FUELLE ESCAPE	EXHAUST BELLOW	CUFFIA SCARICO	1
21	**REC32-90949T**	32-90949T	FUELLE ESCAPE	EXHAUST BELLOW	CUFFIA SCARICO	1

GM 160 - 165 - 200CID - 250 - 292CID
6 CYL EN LÍNEA / IN LINE / IN LINIA

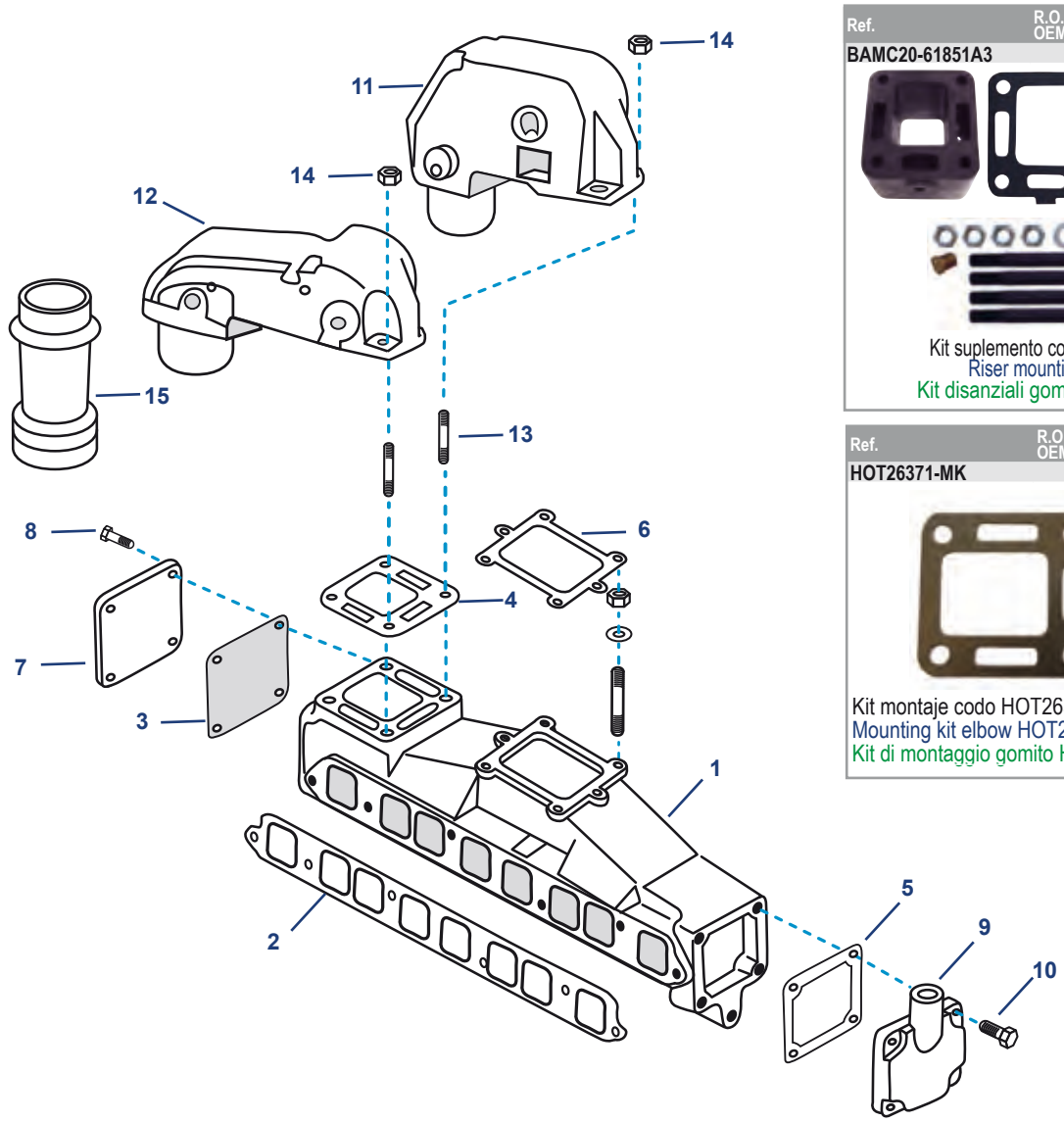

Ref.	R.O. OEM
BAMC20-61851A3	

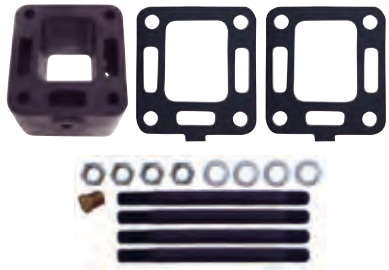

Kit suplemento codo de 76 mm
Riser mounting kit 3”
Kit disanziali gomito da 76 mm

Ref.	R.O. OEM
HOT26371-MK	

Kit montaje codo HOT26371
Mounting kit elbow HOT26371
Kit di montaggio gomito HOT26371

NEW

Nº	Ref.	R.O. OEM	Descripción	Description	Descrizione	Cantidad Quanty Quantità
1	BAMC-1-58759	58759A14	COLECTOR ESCAPE	EXHAUST MANIFOLD ASSEMBLY	COLLETTORE SCARICO	1
2	FEL17319	27-46401	JUNTA COLECTOR ADM/ ESCAPE	GASKET INT./EXHAUST MANIFOLD	GUARNIZIONE COLLETTORE ASP/SCARICO	1
3	REC27-807218	27-807218	JUNTA TAPA	GASKET END CAP	GUARNIZIONE COPERCHIO	1
4	REC27-99777Q02	27-99777Q02	JUNTA COLECTOR A CODO	GASKET EXHAUST MANIFOLD TO ELBOW	GUARNIZIONE INTERMEDIA	1
5	REC27-480431	27-480431	JUNTA TAPA	GASKET END CAP	GUARNIZIONE COPERCHIO	1
6	REC27-58764	27-58764	JUNTA CARBURADOR	GASKET CARBURETOR	GUARNIZIONE CARBURATORE	1
7	HGE4870	73813A1	TAPA	END CAP EXHAUST MANIFOLD	COPERCHIO	1
8	RM10-25299	10-824941	TORNILLO	SCREW END CAP	VITE	4
9	REC60252A2	60252A2	TAPA COLECTOR	END CAP EXHAUST MANIFOLD	COPERCHIO	1
10	REC10-37562	10-37562	TORNILLO	SCREW	VITE	4
NEW 11	HOT20971	76351A04	CODO 90º 3”	EXHAUST ELBOW ASSEMBLY 3” 90º ANGLE	GOMITO DI SCARICO 90º 3”	1
12	REC76325A2	76325A2	CODO 90º 3”	EXHAUST ELBOW ASSEMBLY 3” 90º ANGLE	GOMITO DI SCARICO 90º 3”	1
13	REC16-49545	16-49545	ESPÁRRAGO	STUD	PRIGIONIERO	4
14	REC46335	46335	TUERCA	NUT	DADO	4
15	REC53114A1	53114A1	FUELLE ESCAPE	EXHAUST BELLOW	CUFFIA DI SCARICO	1

262 MAG (TBI), 4.3L (GEN+), 4.3 L EFI (GEN+), 4.3 LH (GEN+), 4.3LX (GEN+), GM 262 V6 (1996-01)

PIEZAS NECESARIAS PARA SUBSTITUIR EL COLECTOR-CODO PARA V6.
NEEDS PARTS TO REPLACE V6 MANIFOLD-ELBOW.
PEZZI NECESSARI PER SOSTITUIRE IL COLLETTORE PER V6.

1

2

3

4

5

6

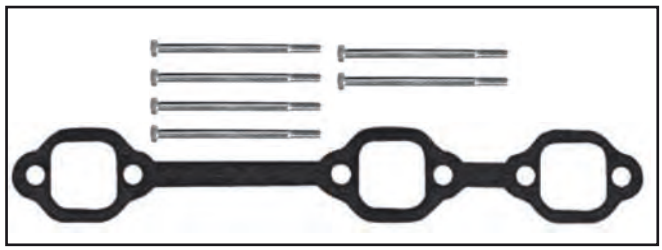
7

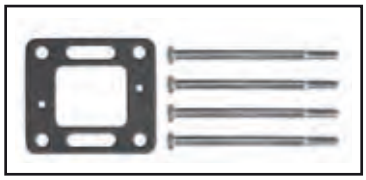
8

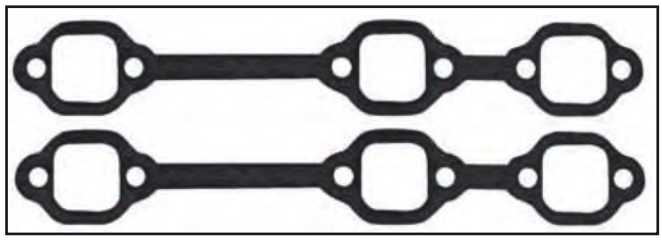
9

10

Nº	Ref.	R.O. OEM	Descripción	Description	Descrizione	Cantidad Quanty Quantità
1	**MAR746**	99746A17	COLECTOR	MANIFOLD	COLLETTORE	2
NEW 1	**HOT20952**	99746A17	COLECTOR	MANIFOLD	COLLETTORE	2
2	**MAR988**	807988A03	CODO 4”	ELBOW 4”	GOMITO 4”	2
NEW 2	**HOT20976**	807988A03	CODO 4”	ELBOW 4”	GOMITO 4”	2
3	**REC32-44348001**	32-44348001	FUELLE ESCAPE SUPERIOR	UPPER EXHAUST BELLOW	CUFFIA SCARICO SUPERIORE	2
4	**REC32-14358001**	32-14358001	FUELLE ESCAPE INFERIOR	LOWER EXHAUST BELLOW	CUFFIA SCARICO INFERIORE	2
5	**BAMC-20-14478**	14478T01	CURVA ESCAPE V6	EXHAUST ELBOW ASSY	CURVA SCARICO V6	2
6	**GS38322**	54-815504372	ABRAZADERA INOX	INOX CLAMP	FASCETTA INOX	8
7	**REC32175**		KIT JUNTA Y TORNILLOS	GASKETS & BOLTS KIT	KIT VITERIA E GUARNIZIONI	2
8	**REC53400**		KIT JUNTAS CODOS Y TORNILLOS	BOLTS & ELBOWS GASKETS KITS	KIT VITERIA E GUARNIZIONI	2
9	**FEL17410**	27-99757	KIT JUNTAS COLECTOR (2 unidades)	MANIFOLD GASKET KIT (2 units)	KIT GUARNIZIONI (2 unità)	1
9	**REC27-99757**	27-99757	JUNTA COLECTOR (1 unidad)	MANIFOLD’S GASKET (1 unit)	GUARNIZIONE (1 unità)	2
10	**REC862210A01**	22-862210A01	KIT TAPÓN Y CONDUCTO	HOSE FITTING W/DRAIN PLUG KIT	KIT RUBINETTO	2

175, 185, 205, 262 MAG, 4.3L, 4.3LX, 4.3 LH, 4.3 LXH, 4.3 EFI, 4.3 MPI, GM 262 CID V6

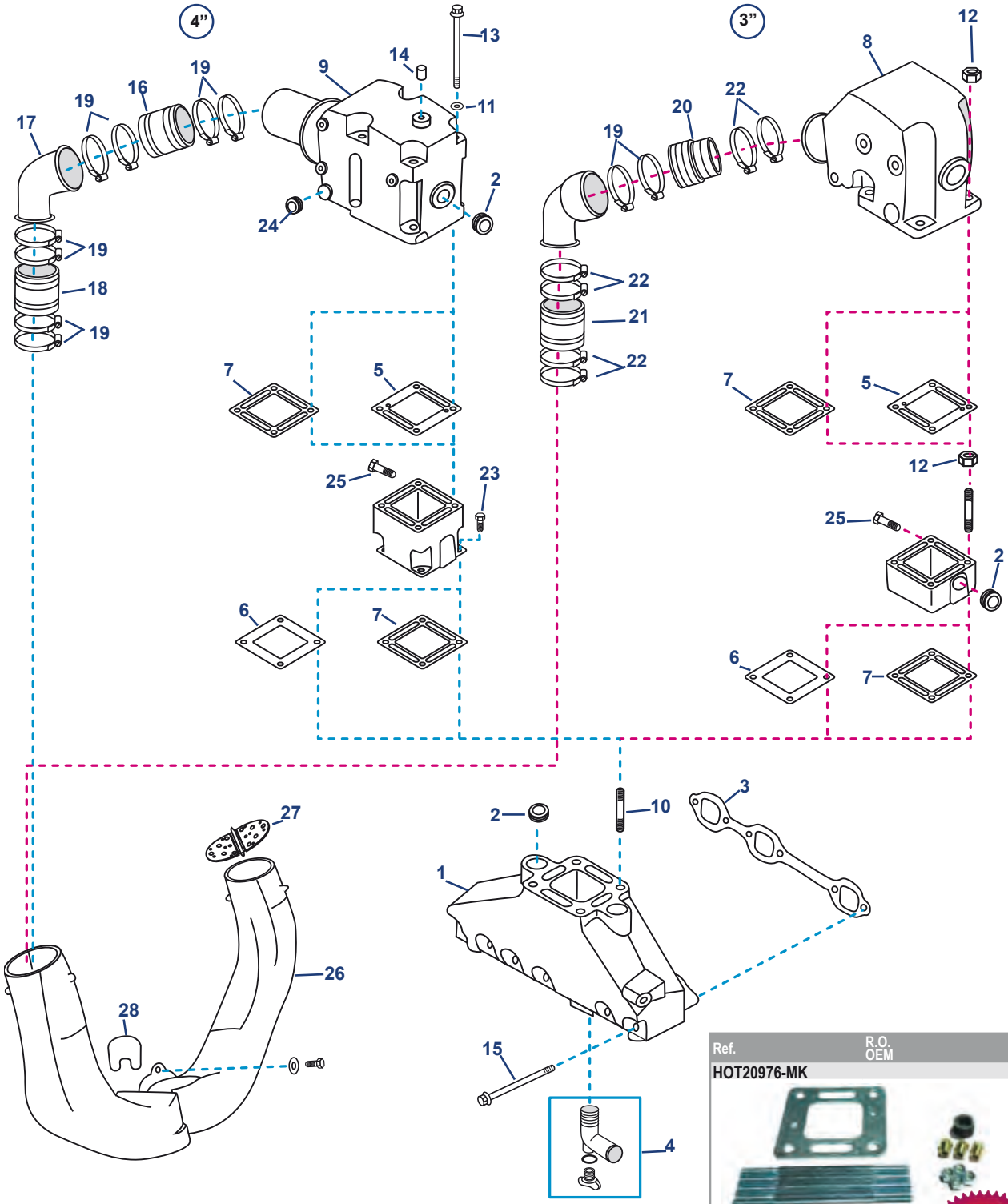

Ref.	R.O. OEM
HOT20976-MK	

Kit montaje para HOT20976
Mounting kit elbow HOT20976
Kit di montaggio gomito HOT20976

NEW

Ref.	R.O. OEM
RECK8503	

Kit tornillos codo y junta
Elbow gasket & bolt kit
Kit viteria gomito e guarnizione

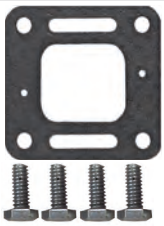

Ref.	R.O. OEM
HOT20952-MK	

Kit montaje para HOT20976
Mounting kit elbow HOT20976
Kit di montaggio gomito HOT20976

NEW

Ref.	R.O. OEM
HOT28503-MK	

Kit montaje para HOT20970
Mounting kit elbow HOT20970
Kit di montaggio gomito HOT20970

NEW

Nº	Ref.	R.O. OEM	Descripción	Description	Descrizione	Cantidad Quanty Quantità
1	MAR746	99746A17	COLECTOR	MANIFOLD	COLLETTORE	1
NEW 1	HOT20952	99746A17	COLECTOR	MANIFOLD	COLLETTORE	1
2	REC22-41622	22-41622	TAPÓN ACERO	PLUG (STEEL)	TAPPO IN ACCIAIO	2
2	REC22-428611	22-428611	TAPÓN BRONCE	PLUG (BRASS)	TAPPO IN BRONZO	2
3	REC27-99757	27-99757	JUNTA COLECTOR	GASKET EXHAUST MANIFOLD	GUARNIZIONE COLLETTORE	1
3	FEL17410	27-99757	KIT DE JUNTAS COLECTOR	GASKET EXHAUST MANIFOLD KIT	KIT GUARNIZIONI COLLETTORE	1
4	REC862210A01	22-862210A01	KIT TAPÓN Y CONDUCTO	HOSE FITTING WITH DRAIN PLUG KIT	KIT TAPPO E CONDOTTO	1
5	REC27-863724Q	27-863724Q	JUNTA COLECTOR CIRCUITO CERRADO	GASKET MANIFOLD FOR RAW WATER COOLING	GUARNIZIONE PER CIRCUITO CHIUSO	1
6	REC27-8637251	27-8637251	JUNTA COLECTOR CIRCUITO AGUA DULCE	GASKET MANIFOLD FOR FRESH WATER COOLING	GUARNIZIONE PER CIRCUITO CHIUSO	1
7	REC27-863726	27-863726	JUNTA	GASKET MANIFOLD	GUARNIZIONE	1
NEW 8	HOT20970	98504A3	CODO	ELBOW 3” 15º	GOMITO	1
8	REC98504A3	98504A3	CODO	ELBOW 3” 15º	GOMITO	1
9	MAR988	807988A03	CODO	ELBOW 4” 7º	GOMITO	1
NEW 9	HOT20976	807988A03	CODO	ELBOW	GOMITO	1
9	SED3092600	807988A3	CODO INOX	ELBOW INOX	GOMITO INOX	1
10	REC16-49545	16-49545	ESPARRAGO DE ACERO	STUD (STEEL)	PRIGIONIERO IN ACCIAO	4
11	REC13-35048	13-35048	ARANDELA CIERRE	LOCKWASHER	CHIUSURA	4
12	REC46335	46335	TUERCA CODO	NUT FLANGE SERRATED NUT	DADO GOMITO	4
13	REC10-43749	10-43749	TORNILLO	SCREW	VITE	4
14	REC22-73379	22-73379	TAPÓN	PLUG	TAPPO	1
15	REC10-53728	10-53728	TORNILLO	SCREW	VITE	6
16	REC32-44348001	32-44348001	FUELLE ESCAPE 4”	EXHAUST BELLOW 4”	CUFFIA DI SCARICO 4”	1
17	BAMC-20-14478	14478T01	TUBO 4”	TUBE 4”	TUBO 4”	1
17	RM14865A1	14865A1	KIT INSTALACIÓN RISER V6	V6 RISER INST. ASSEMBLY	KIT INSTALACION RISER V6	1
18	REC32-14358001	32-14358001	FUELLE ESCAPE	EXHAUST BELLOW	CUFFIA DI SCARICO	1
19	GS38322	54-815504372	ABRAZADERA	CLAMP	FASCETTA	8
20	REC70981A3	70981A3	FUELLE ESCAPE 3”	EXHAUST BELLOW 3”	CUFFIA DI SCARICO 3”	1
21	REC32-90949T	32-90949T	FUELLE ESCAPE 3”	EXHAUST BELLOW 3”	CUFFIA DI SCARICO 3”	1
22	GS38320	54-815504256	ABRAZADERA	CLAMP	FASCETTA	6
23	REC10-865982005	10-865982005	TORNILLO	SCREW	VITE	4
24	REC22-36382	22-36382	TAPÓN	PLUG	TAPPO	1
25	REC22-328022	22-328022	TAPÓN	PLUG	TAPPO	1
26	RM807130A4	807130A4	CUERNOS DE ESCAPE	EXHAUST PIPE	CORNA DI SCARICO	1
27	REC807166A1	807166A1	PALOMILLA ESCAPE	WATER SHUTTER	FARFALLA SCARICO	1
28	REC41802	41802	JUNTA	GASKET	GUARNIZIONE	1

NEW

Ref.	R.O. OEM
MAR3320PAR	93320A13
HOT20908	93320A13

Kit Riser 3” (76 mm)
3” Riser Kit (76 mm)
Kit Distanziale 3” (76 mm)

Ref.	R.O. OEM
HOT20985	93322A12AV

NEW

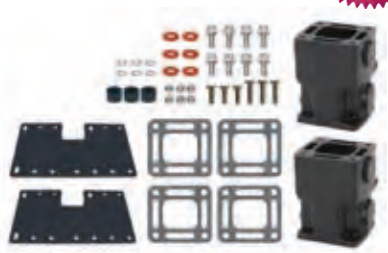

Kit Riser 6” (152 mm)
6” Riser Kit (152 mm)
Kit Distanziale 6” (152 mm)

Ref.	R.O. OEM
REC32175	

Kit tornillos colector y junta
Manifold gasket & bolt kit
Kit viteria collettore e guanizione

Ref.	R.O. OEM
REC53400	

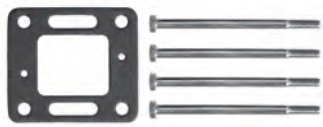

Kit tornillos codo y junta
Elbow gasket & bolt kit
Kit viteria gomito e guarnizione

4.3L CARB MPI ALPHA/BRAVO

Ref.	R.O. OEM	
BAMC-20-864908A1	864908A1	6”

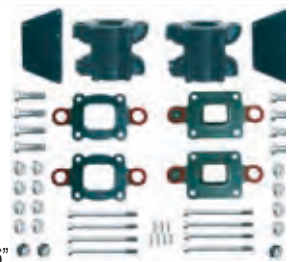

KIT RISER 6”

Ref.	R.O. OEM
RECK309	

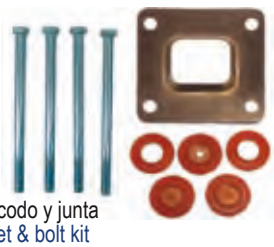

Kit tornillos codo y junta
Elbow gasket & bolt kit
Kit viteria gomito e guarnizione

Ref.	R.O. OEM
REC270	

Junta codo - colector
Elbow - manifold gasket
Guarnizione intermedia

Nº	Ref.	R.O. OEM	Descripción	Description	Descrizione	Cantidad Quanty Quantità
1	**REC32-44348001**	32-44348001	FUELLE ESCAPE	EXHAUST BELLOW	MANICOTTO SCARICO	2
2	**GS38310**	54-815504456	ABRAZADERA	CLAMP	FASCETTA	8
3	**GS38320**	54-815504456	ABRAZADERA	CLAMP	FASCETTA	8
4	**REC32-14358001**	32-14358001	FUELLE ESCAPE COLECTOR	EXHAUST BELLOW	MANICOTTO SCARICO COLLETTORE	2
5	**RM807130A4**	807130A4	CUERNOS DE ESCAPE	EXHAUST PIPE	CORNA DI SCARICO	1
6	**REC807166A1**	807166A1	PALOMILLA ESCAPE	WATER SHUTTER	FARFALLA SCARICO	2
7	**REC10-98794**	10-98794	TORNILLO	SCREW COVER	VITE	4
8	**REC41802**	41802	RETÉN TRANSON	TRANSON GASKET	GUARNIZIONE TRANSON	1
9	**MAR309**	864309T02	CODO BAJO 17 cm	ELBOW LOW 17 cm	GOMITO BASSO 17 cm	2
9	**MAR591**	864591T02	CODO ALTO 20,5 cm	ELBOW HIGH 20,5 cm	GOMITO ALTO 20,5 cm	2
NEW 9	**HOT20591**	864591T02	CODO ALTO 20,5 cm	ELBOW HIGH 20,5 cm	GOMITO ALTO 20,5 cm	2
9	**SED3095400**	864309T02	CODO BAJO INOX	ELBOW LOW SS	GOMITO BASSO INOX	2
9	**SED3095500**	864591T02	CODO ALTO INOX	ELBOW HIGH SS	GOMITO ALTO INOX	2
10	**REC22-73379**	22-73379	TAPÓN	PLUG	TAPPO	1
11	**REC10-43749**	10-43749	TORNILLO	SCREW	VITE	8
12	**REC13-35048**	13-35048	ARANDELA	LOCK WASHER	RONDELLA	8
13	**REC22-428611**	22-428611	TAPÓN	FITTING	TAPPO	8
14	**REC19-864689**	19-864689	TAPÓN	PLUG	TAPPO	2
15	**REC27-99757**	27-99757	JUNTA COLECTOR	MANIFOLD GASKET	GUARNIZIONE COLLETTORE	2
15	**FEL17410**	27-99757	KIT JUNTAS COLECTOR	MANIFOLD GASKET KIT	KIT GUARNIZIONE COLLETTORE	1
16	**MAR612**	864612T01	COLECTOR	MANIFOLD	COLLETTORE	2
17	**REC10-53728**	10-53728	TORNILLO	SCREW	VITE	6
18	**REC862210A01**	22-862210A01	KIT TAPÓN Y CONDUCTO	ELBOW AND PLUG KIT	KIT TAPPO E TUBO	1
19	**REC270**	27-684547A02	JUNTA CODO - COLECTOR	ELOW-MANIFOLD GASKET	GUARNIZIONE INTERMEDIA	1
20	**REC22-866725**	22-866725	RACORD COLECTOR	STRAIGHT FITTING	RACCORDO COLLETTORE	1
21	**RM14865A1**	14865A1	KIT RISER V6	RISER KIT V6	KIT RISER V6	1

Ref.	R.O. OEM	
HGE4929	864929A3	3”

KIT RISER 3”

Ref.	R.O. OEM	
REC27-99757	27-99757	1
FEL17410	27-99757	2

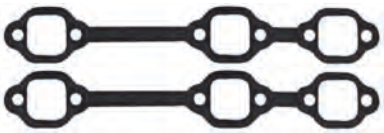

Juntas colector
Manifold gaskets
Guarnizione collettore

Ref.	R.O. OEM
RECK591	

Kit para MAR591
Kit for MAR591
Kit per MAR591

Ref.	R.O. OEM
REC32175	

Kit tornillos colector y junta
Manifold gasket & bolt kit
Kit viteria collettore e guanizione

305, 350, 377, 383, 385, (6.2L) MAG MPI HORIZON ALPHA/BRAVO

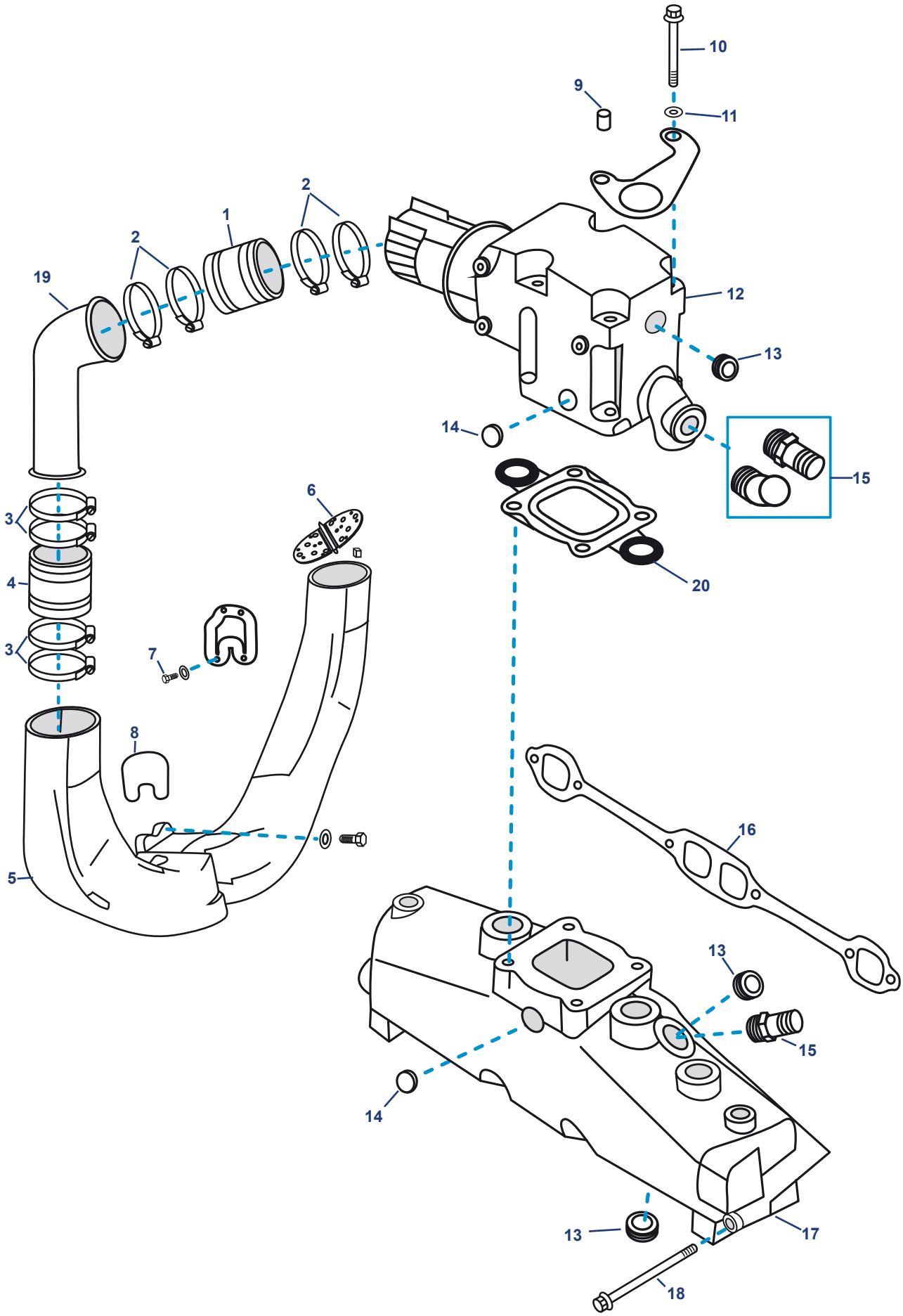

Nº	Ref.	R.O. OEM	Descripción	Description	Descrizione	Cantidad Quanty Quantità
1	REC32-44348001	32-44348001	FUELLE ESCAPE	EXHAUST BELLOW	MANICOTTO SCARICO	2
2	GS38310	54-815504456	ABRAZADERA	CLAMP	FASCETTA	8
3	GS38320	54-815504272	ABRAZADERA	CLAMP	FASCETTA	8
4	REC32-14358001	32-14358001	FUELLE ESCAPE COLECTOR	EXHAUST BELLOW	MANICOTTO SCARICO COLLETTORE	2
5	RM807130A4	807130A4	CUERNOS DE ESCAPE	EXHAUST PIPE	CORNA DI SCARICO	1
6	REC807166A1	807166A1	PALOMILLA ESCAPE	WATER SHUTTER	FARFALLA SCARICO	2
7	REC10-98794	10-98794	TORNILLO	SCREW COVER	VITE	4
8	REC41802	41802	RETÉN TRANSON	TRANSON GASKET	GUARNIZIONE TRANSON	1
9	REC22-73379	22-73379	TAPÓN	PLUG	TAPPO	1
10	REC10-43749	10-43749	TORNILLO	SCREW	VITE	8
11	REC13-35048	13-35048	ARANDELA	WASHER	RONDELLA	8
12	MAR309	864309T02	CODO BAJO 17 cm	ELBOW LOW 17 cm	GOMITO BASSO 17 cm	2
12	MAR591	864591T02	CODO ALTO 20,5 cm	ELBOW HIGH 20,5 cm	GOMITO ALTO 20,5 cm	2
NEW 12	HOT20951	864591T02	CODO ALTO 20,5 cm	ELBOW HIGH 20,5 cm	GOMITO ALTO 20,5 cm	2
12	SED3095400	864309T02	CODO BAJO INOX	ELBOW LOW SS	GOMITO BASSO INOX	2
12	SED3095500	864591T02	CODO ALTO INOX	ELBOW HIGH SS	GOMITO ALTO INOX	2
13	REC22-428611	22-428611	TAPÓN	PLUG	TAPPO	4
14	REC19-864689	19-864689	TAPÓN	PLUG	TAPPO	6
15	REC22-866725	22-866725	RACORD COLECTOR	STRAIGHT FITTING	RACCORDO COLLETTORE	1
16	REC27-33395	27-33395	JUNTA COLECTOR	MANIFOLD GASKET	GUARNIZIONE COLLETTORE	2
16	FEL17420	27-33395	KIT JUNTAS COLECTOR	MANIFOLD GASKET KIT	KIT GUARNIZIONE COLLETTORE	1
NEW 17	HOT20735	865735A02	COLECTOR	MANIFOLD	COLLETTORE	2
NEW 17	MAR735	865735A02	COLECTOR	MANIFOLD	COLLETTORE	2
18	REC10-53728	10-53728	TORNILLO	SCREW	VITE	8
19	RM14801A1	14801A1	KIT SUPLEMENTOS	KIT RISER	KIT DISTANZIALE	1
20	REC270		JUNTA CODO - COLECTOR	ELOW-MANIFOLD GASKET	GUARNIZIONE INTERMEDIA	1

Ref.	R.O. OEM	
HGE4929	864929A3	3”

KIT RISER 3”

Ref.	R.O. OEM
RECK591	

Kit para MAR591
Kit for MAR591
Kit per MAR591

Ref.	R.O. OEM	
BAMC-20-864908A1	864908A1	6”

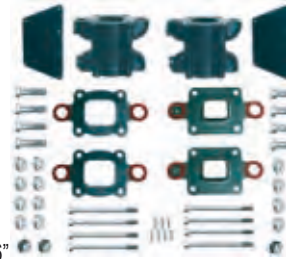

KIT RISER 6”

Ref.	R.O. OEM
RECK309	

Kit tornillos codo y junta
Elbow gasket & bolt kit
Kit viteria gomito e guarnizione

Ref.	R.O. OEM
REC270	27-864547A02

Junta codo - colector
Elbow - manifold gasket
Guarnizione intermedia

198MIE, 228, 228MIE & 898, GM305CID, V8 / 250, 255MIE & 260

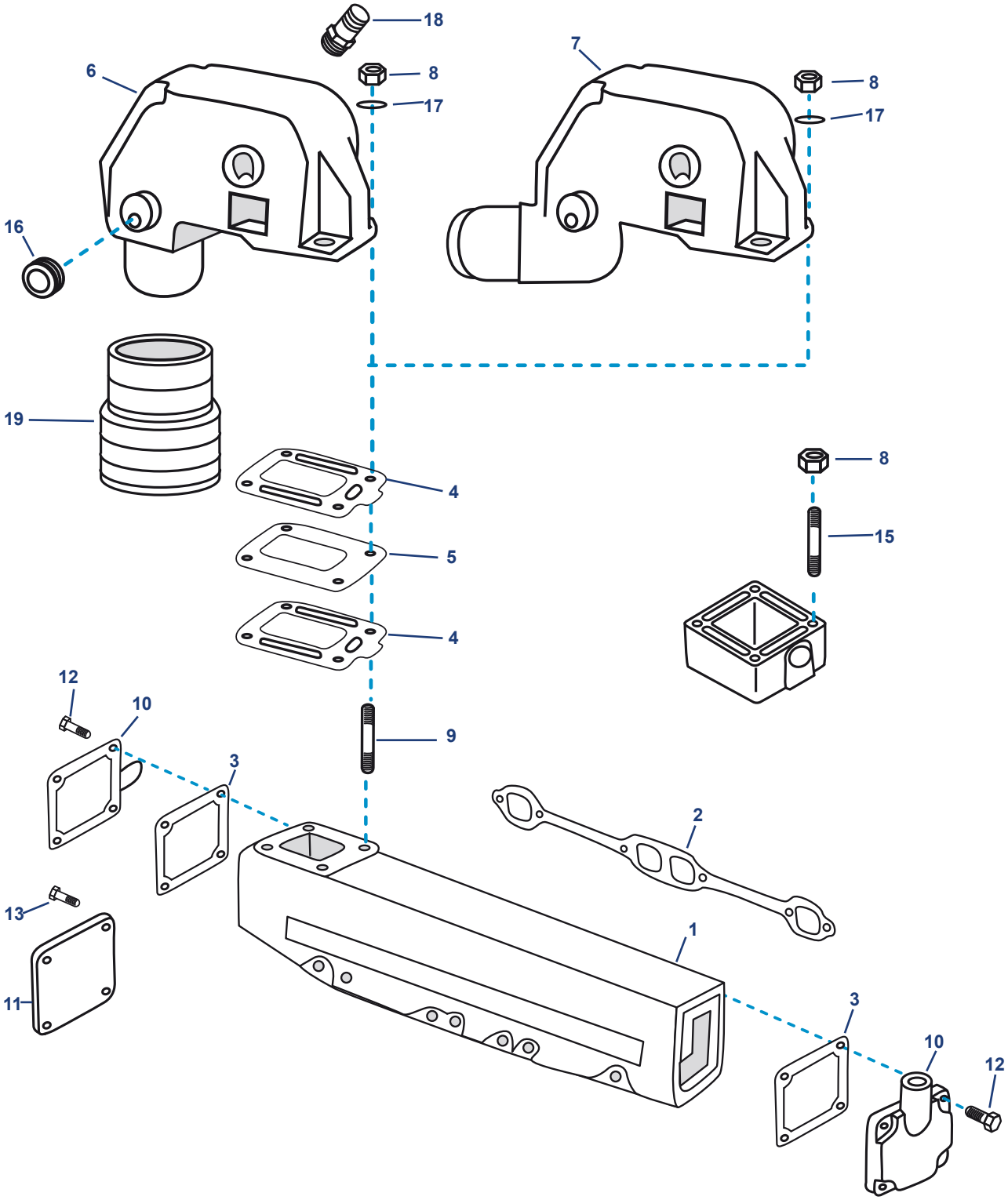

Nº	Ref.	R.O. OEM	Descripción	Description	Descrizione	Cantidad Quanty Quantità
NEW 1	HOT20950	77234A7	COLECTOR BABOR	EXHAUST MANIFOLD PORT	COLLETTORE DI SINISTRA	1
NEW 1	HOT20951	77235A8	COLECTOR ESTRIBOR	EXHAUST MANIFOLD STARBOARD	COLLETTORE DI DESTRA	1
2	REC27-33395	27-33395	JUNTA COLECTOR	GASKET EXHAUST MANIFOLD	GUARNIZIONE COLLETTORE	1
2	FEL17420	27-33395	KIT JUNTAS COLECTOR	EXHAUST MANIFOLD KIT	KIT GUARNIZIONI COLLETTORE	1
3	REC27-480431	27-480431	JUNTA TAPA	GASKET END CAP	GUARNIZIONE COPERCHIO	2
4	REC27-99777Q02	27-99777Q02	JUNTA CODO	GASKET EXHAUST ELBOW	GUARNIZIONE COPERCHIO	2
5	REC60207	60207	TAPA COLECTOR	PLATE	PIASTRA	1
NEW 6	HOT20971	76351A04	CODO 90º	EXHAUST ELBOW ASSY. 3” 90º	GOMITO 90º	1
NEW 7	HOT20978	76771A2	CODO 0º	EXHAUST ELBOW ASSY. 3” 0º	GOMITO 0º	1
7	REC76771A2	76771A2	CODO 0º	EXHAUST ELBOW ASSY. 3” 0º	GOMITO 0º	1
8	REC46335	46335	TUERCA CODO	FLANGE SERRATED NUT	DADO	4
9	REC16-49545	16-49545	ESPÁRRAGO	STUD	PRIGIONIERO	4
10	REC60252A2	60252A2	TAPA COLECTOR	END CAP EXHAUST MANIFOLD	COPERCHIO COLLETTORE	2
11	HGE4870	73813A1	TAPA COLECTOR	END CAP EXHAUST MANIFOLD	COPERCHIO COLLETTORE	1
12	REC10-35386	10-35386	TORNILLO	SCREW END CAP	VITE	8
13	RM10-25299	10-824941	TORNILLO	SCREW END CAP	VITE	4
15	REC16-97520	16-97520	ESPÁRRAGO	STUD	PRIGIONIERO	4
16	REC22-41622	22-41622	TAPON CODO	ELBOW PLUG	TAPPO GOMITO	2
17	REC13-35048	13-35048	ARANDELA	WASHER	RONDELLA	4
18	REC22-866725	22-866725	RACORD COLECTOR	STRAIGHT FITTING	RACCORDO COLLETTORE	2
19	REC70981A3	70981A3	FUELLE ESCAPE	EXHAUST BELOW	MANICOTTO SCARICO	2

Ref. R.O. OEM
OSC7214-MK

Kit tornillos codo y junta
Elbow gasket & bolt kit
Kit viteria gomito e guarnizione

Ref. R.O. OEM
A/P5408

Kit tornillos
Bolt kit
Kit viteria

Ref. R.O. OEM
HOT27214-MK

Kit montaje para HOT20950 y HOT20951
Mounting kit elbow HOT20950 & HOT20951
Kit di montaggio gomito HOT20950 e HOT20951

Ref. R.O. OEM
HOT26371-MK

Kit montaje para HOT20971 y HOT20978
Mounting kit elbow HOT20971 & HOT20978
Kit di montaggio gomito HOT20971 e HOT20978

Ref. R.O. OEM
BAMC20-61851A3

Kit suplementos 3”
Riser 3”
Kit riser 3”

200, 228, 230, 230 MIE, 5.0L, 5.0LX, 898, 5.0L MPI, GM305 CID, 260, 260 MIE, 320 EFI, 350 MAG, GM350 CID, 5.7L, 5.7LX, 6.2L MPI V8 (1983 + 2003)

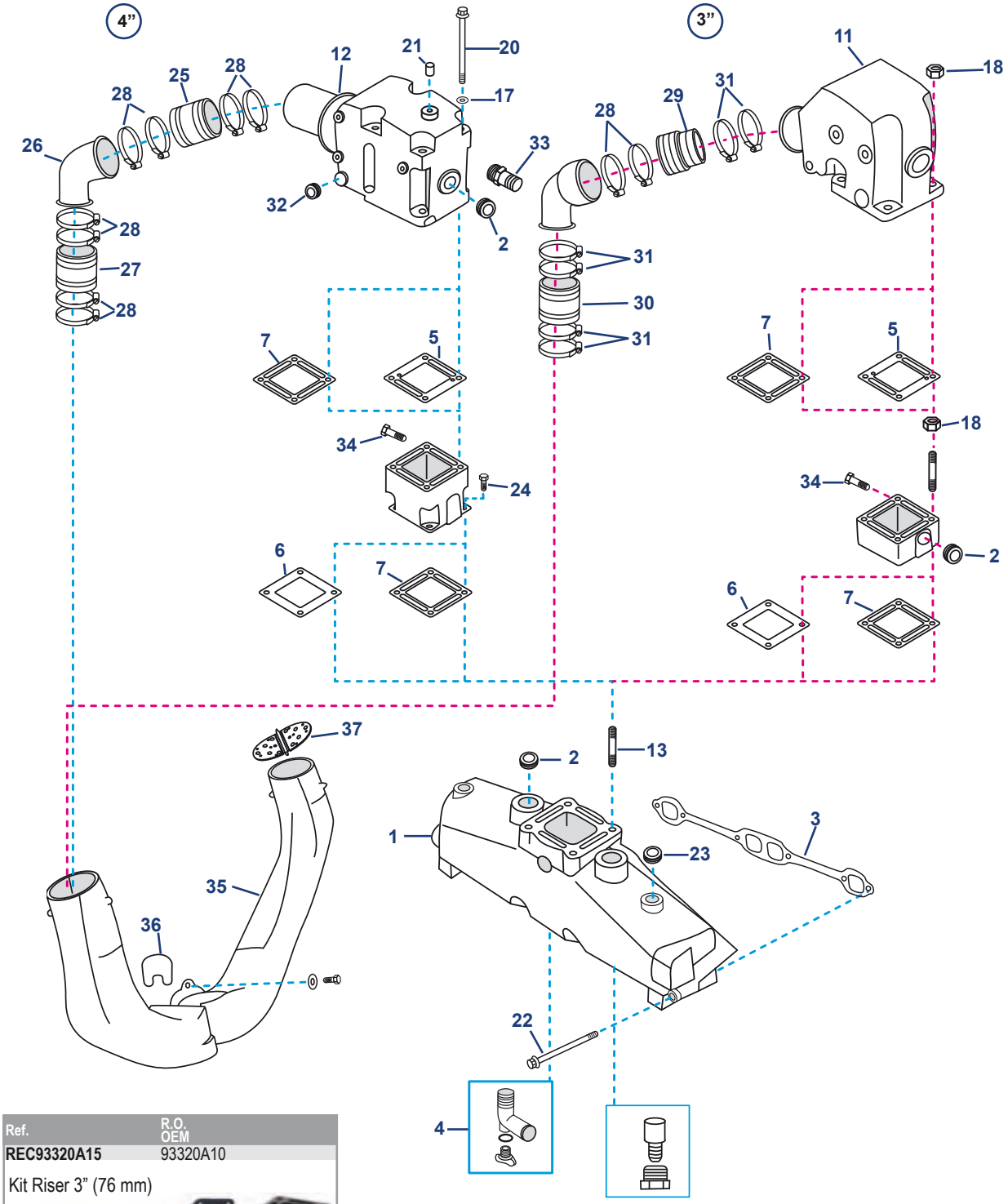

Ref.	R.O. OEM
REC93320A15	93320A10

Kit Riser 3" (76 mm)

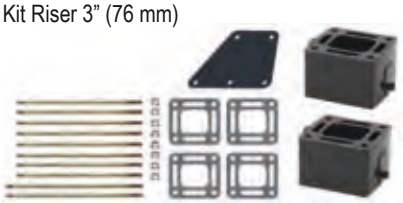

Ajustado para / FITS / Si adatta:
2001-02 MCM 4.3L MPI (0M300000-0M614999),
2001-02 MCM V8 (305, 350 & 377 CID) MPI engine (0M300000-0M599999),
2001-02 MIE & Ski V8 (350 & 377 CID) MPI engines (0M300000-0M316999).
Sólo apto para motores con codos de hierro fundido.
Fits only the above engines with cast iron elbows.
Adatto solo per i motori con i gomiti di ghisa.

Ref.	R.O. OEM
RECK8503	

Kit tornillos codo y junta
Elbow gasket & bolt kit
Kit viteria gomito e guarnizione

Ref.	R.O. OEM
REC53400	

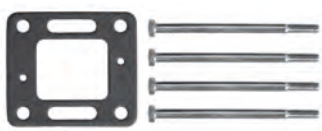

Kit tornillos codo y junta
Elbow gasket & bolt kit
Kit viteria gomito e guarnizione

Nº	Ref.	R.O. OEM	Descripción	Description	Descrizione	Cantidad Quanty Quantità
1	MAR246	860246A15	COLECTOR	MANIFOLD	COLLETTORE	2
NEW 1	HOT20953	860246A15	COLECTOR	MANIFOLD	COLLETTORE	2
2	REC22-41622	22-41622	TAPÓN ACERO	PLUG (STEEL)	TAPPO IN ACCIAIO	2
2	REC22-428611	22-428611	TAPÓN BRONCE	PLUG (BRASS)	TAPPO IN BRONZO	2
3	REC27-33395	27-33395	JUNTA COLECTOR	GASKET EXHAUST MANIFOLD	GUARNIZIONE COLLETTORE	2
3	FEL17420	27-33395	KIT JUNTAS	GASKET EXHAUST MANIFOLD	KIT GUARNIZIONI	2
4	REC862210A01	22-862210A01	KIT TAPÓN Y CONDUCTO	HOSE FITTING WITH DRAIN PLUG KIT	KIT TAPPO	1
5	REC27-863724Q	27-863724Q	JUNTA COLECTOR CIRCUITO CERRADO	GASKET MANIFOLD RAW WATER COOLING	GUARNIZIONE COLLETTORE CIRCUITO APERTO	1
6	REC27-8637251	27-8637251	JUNTA COLECTOR CIRCUITO AGUA DULCE	GASKET MANIFOLD FOR FRESH WATER COOLING	GUARNIZIONE COLLETTORE CIRCUITO CHIUSO	1
7	REC27-863726	27-863726	JUNTA GASKET	MANIFOLD AND SPACERS	GUARNIZIONE PER DISTANZIALE GASKET	1
NEW 11	HOT20970	98504A3	CODO HIERRO	ELBOW (IRON CASTING) 3" 15º	GOMITO IN GHISA	2
11	REC98504A3	98504A3	CODO HIERRO	ELBOW (IRON CASTING) 3" 15º	GOMITO IN GHISA	2
12	MAR988	807988A03	CODO HIERRO	ELBOW (IRON CASTING) 4" 7º	GOMITO IN GHISA	2
NEW 12	HOT20976	807988A03	CODO HIERRO	ELBOW (IRON CASTING)	GOMITO IN GHISA	2
12	SED3092600		CODO INOX	ELBOW INOX 4" 7º	GOMITO INOX	2
13	REC16-49545	16-49545	TORNILLO	STUD (STEEL)	VITE	1
17	REC13-35048	13-35048	CIERRE	LOCKWASHER	CHIUSURA	4
18	REC46335	46335	TUERCA CODO	FLANGE SERRATED NUT	DADO GOMITO	4
20	REC10-43749	10-43749	TORNILLO ACERO	SCREW STEEL ZINC PLATED	VITE IN ACCIAIO	4
21	REC22-73379	22-73379	TAPÓN	PLUG	TAPPO	1
22	REC10-53728	10-53728	TORNILLO	SCREW	VITE	4
23	REC22-384071	22-384071	TAPÓN	PLUG	TAPPO	1
24	REC10-865982005	10-865982005	TORNILLO	SCREW	VITE	1
25	REC32-44348001	32-44348001	FUELLE ESCAPE 4"	EXHAUST BELLOW 4"	CUFFIA SCARICO 4"	1
26	BAMC-20-14478	14478T01	TUBO	TUBE	TUBO	1
26	RM14801A1	14801A1	KIT SUPLEMENTOS	KIR RISER	KIT DISTANZIALE	1
27	REC32-14358001	32-14358001	FUELLE ESCAPE 4"	EXHAUST BELLOW 4"	CUFFIA SCARICO 4"	1
28	GS38322	54-815504372	ABRAZADERA	CLAMP	FASCETTA	1
29	REC70981A3	70981A3	FUELLE ESCAPE 3"	EXHAUST BELLOW 3"	CUFFIA SCARICO 3"	1
30	REC32-90949T	32-90949T	FUELLE ESCAPE 3"	EXHAUST BELLOW 3"	CUFFIA SCARICO 3"	1
31	GS38320	54-815504256	ABRAZADERA	CLAMP	FASCETTA	1
32	REC22-36382	22-36382	TAPÓN	PLUG	TAPPO	1
33	REC22-866725	22-866725	RACORD COLECTOR	STRAIGHT FITTING	RACCORDO COLLETTORE	2
34	REC22-328022	22-328022	TAPÓN	CAP	TAPPO	2
35	RM807130A4	807130A4	CUERNOS DE ESCAPE	EXHAUST PIPE	CORNA DI SCARICO	1
36	REC41802	41802	RETÉN TRANSON	TRANSON GASKET	GUARNIZIONE TRANSON	1
37	REC807166A1	807166A1	PALOMILLA ESCAPE	WATER SHUTTER	FARFALLA SCARICO	2

Ref. R.O. OEM
HOT27214-MK
NEW

Kit montaje para HOT20950 y HOT20951
Mounting kit elbow HOT20950 & HOT20951
Kit di montaggio gomito HOT20950 e HOT20951

Ref. R.O. OEM
OSC7214-MK

Kit tornillos codo y junta
Elbow gasket & bolt kit
Kit viteria gomito e guarnizione

Ref. R.O. OEM
HOT20976-MK
NEW

Kit montaje para HOT20976
Mounting kit elbow HOT20976
Kit di montaggio gomito HOT20976

Ref. R.O. OEM
HOT28503-MK

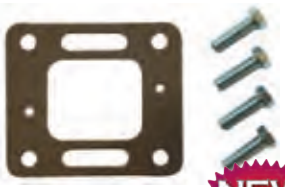

NEW

Kit montaje para HOT20970
Mounting kit elbow HOT20970
Kit di montaggio gomito HOT20970

Ref. R.O. OEM
MAR3320PAR 93320A13
HOT20908 93320A13
NEW

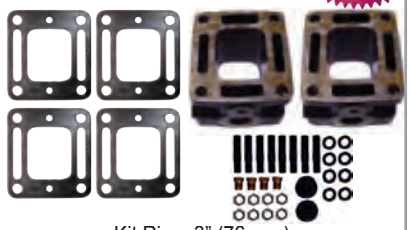

Kit Riser 3" (76 mm)
3" Riser Kit (76 mm)
Kit Distanziale 3" (76 mm)

Ref. R.O. OEM
HOT20985 93322A12AV
NEW

Kit Riser 6" (152 mm)
6" Riser Kit (152 mm)
Kit Distanziale 6" (152 mm)

330, 340MIE, 370TRS, 454EFI, 454MAG, 7.4MIE, 7.4L, 7.4LX, GM454 CID V8 / 502 EFI, 502 MAG, 8.2L, GM502 CID V8

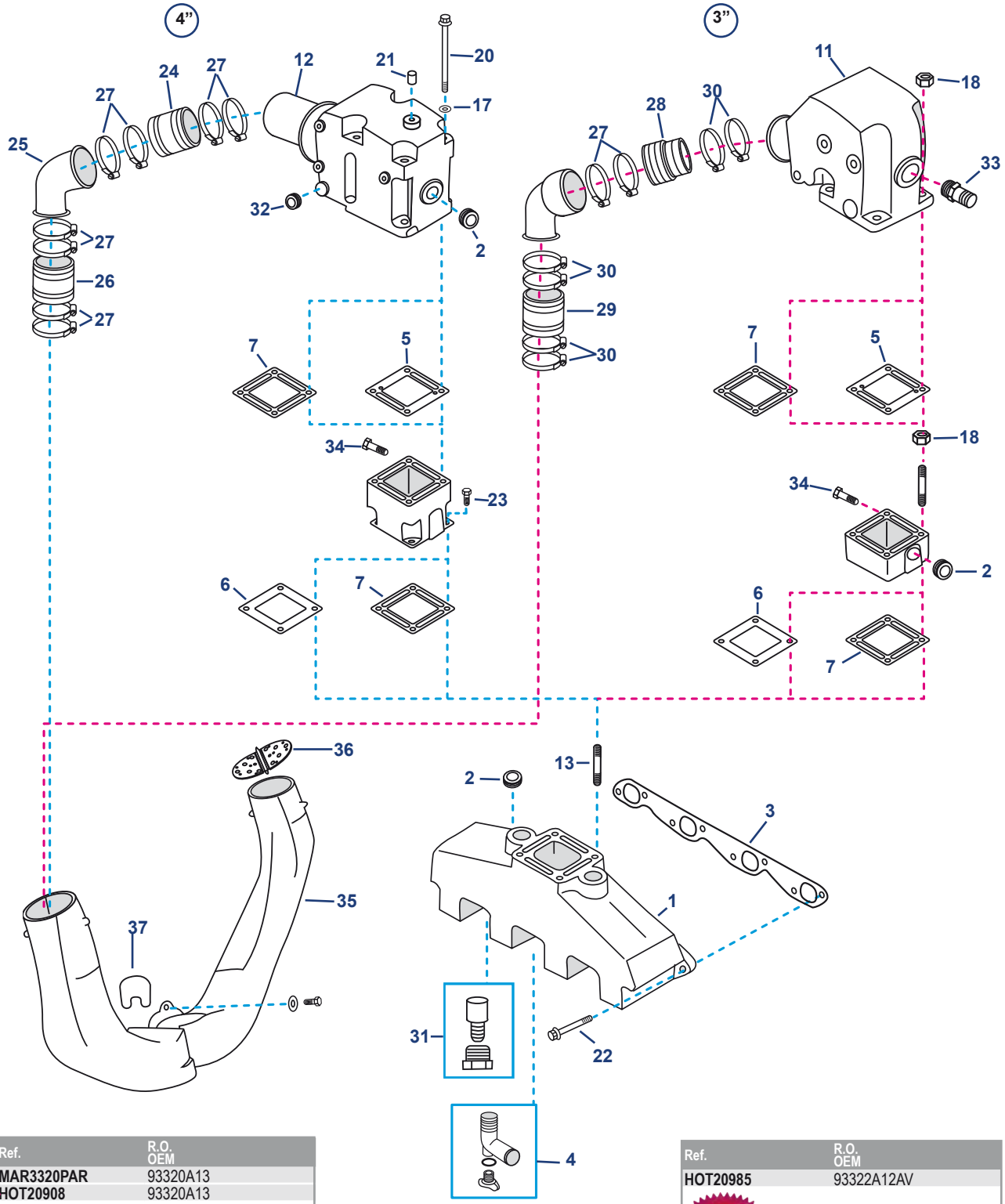

Ref.	R.O. OEM
MAR3320PAR	93320A13
HOT20908	93320A13

NEW

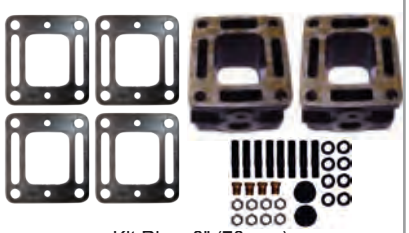

Kit Riser 3" (76 mm)
3" Riser Kit (76 mm)
Kit Distanziale 3" (76 mm)

Ref.	R.O. OEM
HOT20985	93322A12AV

NEW

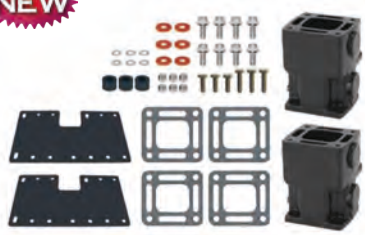

Kit Riser 6" (152 mm)
6" Riser Kit (152 mm)
Kit Distanziale 6" (152 mm)

Nº	Ref.	R.O. OEM	Descripción	Description	Descrizione	Cantidad Quanty Quantità
1	**MAR078**	807078T10	COLECTOR HIERRO	EXHAUST MANIFOLD ASSEMBLY (IRON)	COLLETTORE IN GHISA	2
NEW 1	**HOT20957**	807078T10	COLECTOR HIERRO	EXHAUST MANIFOLD ASSEMBLY (IRON)	COLLETTORE IN GHISA	2
2	**REC22-41622**	22-41622	TAPÓN ACERO	PLUG (STEEL)	TAPPO ACCIAIO	2
2	**REC22-428611**		TAPÓN BRONCE	PLUG (BRASS)	TAPPO IN BRONZO	2
3	**REC27-46820**	27-46820	JUNTA COLECTOR	GASKET EXHAUST MANIFOLD	GUARNIZIONE COLLETTORE	2
3	**FEL17440**	27-46820	KIT JUNTAS COLECTOR	GASKET EXHAUST MANIFOLD	KIT GUARNIZIONI COLLETTORE	2
4	**REC862210A01**	22-862210A01	KIT TAPÓN Y CONDUCTO	HOSE FITTING WITH DRAIN PLUG KIT	KIT RUBINETTO	1
5	**REC27-863724Q**	27-863724Q	JUNTA COLECTOR CIRCUITO CERRADO	MANIFOLD-RAW WATER COOLING	GUARNIZIONE COLLETTORE CIRCUITO APERTO	1
6	**REC27-8637251**	27-8637251	JUNTA COLECTOR CIRCUITO AGUA DULCE	MANIFOLD FRESH WATER COOLING	GUARNIZIONE COLLETTORE CIRCUTO CHIUSO	1
7	**REC27-863726**	27-863726	JUNTA	GASKET EXHAUST MANIFOLD AND SPACERS	GUARNIZIONE	1
NEW 11	**HOT20970**	98504A3	CODO HIERRO 3” 15º	EXHAUST ELBOW (IRON CASTING) 3”,15º	GOMITO IN GHISA 3” 15º	1
11	**REC98504A3**	98504A3	CODO HIERRO 3” 15º	EXHAUST ELBOW (IRON CASTING) 3”,15º	GOMITO IN GHISA 3” 15º	1
12	**MAR988**	807988A03	CODO HIERRO 4” 7º	EXHAUST ELBOW (IRON CASTING) 4”, 7º	GOMITO IN GHISA 4” 7º	1
NEW 12	**HOT20976**	807988A03	CODO HIERRO 4” 7º	EXHAUST ELBOW (IRON CASTING) 4”, 7º	GOMITO IN GHISA 4” 7º	1
12	**SED3092600**	807988A03	CODO INOX 4” 7º	EXHAUST ELBOW INOX, 4”, 7º	GOMITO INOX 4” 7º	1
13	**REC16-49545**	16-49545	ESPÁRRAGO 3/8” x 1 3/4”	STUD 3/8” x 1 3/4”	PRIGIONIERO 3/8” x 1 3/4”	4
17	**REC13-35048**	13-35048	CIERRE	LOCKWASHER	CHIUSURA	4
18	**REC46335**	46335	TUERCA	FLANGE SERRATED NUT	DADO	4
20	**REC10-43749**	10-43749	TORNILLO	SCREW STEEL ZINC PLATED	VITE	4
21	**REC22-73379**	22-73379	TAPÓN	PLUG	TAPPO	1
22	**REC10-37612**	10-37612	TORNILLO	SCREW	VITE	8
23	**REC10-865982005**	10-865982005	TORNILLO	SCREW	VITE	4
24	**REC32-44348001**	32-44348001	FUELLE ESCAPE 4”	EXHAUST BELLOW 4”	CUFFIA SCARICO 4”	1
25	**BAMC-20-14478**	14478T01	TUBO	TUBE	TUBO	1
26	**REC32-14358001**	32-14358001	FUELLE ESCAPE 4”	EXHAUST BELLOW 4”	CUFFIA SCARICO 4”	1
27	**GS38322**	54-815504372	ABRAZADERA	CLAMP	FASCETTA	10
28	**REC70981A3**	70981A3	FUELLE ESCAPE 3”	EXHAUST BELLOW 3”	CUFFIA SCARICO 3”	1
29	**REC32-90949T**	32-90949T	FUELLE ESCAPE 3”	EXHAUST BELLOW 3”	CUFFIA SCARICO 3”	1
30	**GS38320**	54-815504256	ABRAZADERA	CLAMP	FASCETTA	6
32	**REC22-36382**	22-36382	TAPÓN	PLUG	TAPPO	2
33	**REC22-866725**	22-866725	RACORD COLECTOR	STRAIGHT FITTING	RACCORDO COLLETTORE	2
34	**REC22-328022**	22-328022	TAPÓN	PLUG	TAPPO	2
35	**RM807130A4**	807130A4	CUERNOS DE ESCAPE	EXHAUST PIPE	CORNA DI SCARICO	1
36	**REC807166A1**	807166A1	PALOMILLA DE ESCAPE	WATER SHUTTER	FARFALLA SCARICO	2
37	**REC41802**	41802	RETÉN TRANSON	TRANSON GASKET	GUARNIZIONE TRANSON	1

Ref. R.O. OEM
RECK8503

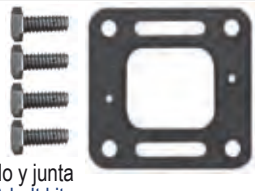

Kit tornillos codo y junta
Elbow gasket & bolt kit
Kit viteria gomito e guarnizione

Ref. R.O. OEM
REC33765

Kit tornillos colector y junta
Manifold gasket & bolt kit
Kit viteria collettore e guarnizione

Ref. R.O. OEM
REC53400

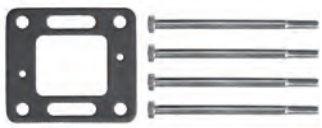

Kit tornillos codo y junta
Elbow gasket & bolt kit
Kit viteria gomito e guarnizione

Ref. R.O. OEM
HOT20957-MK

Kit montaje para HOT20957
Mounting kit elbow HOT20957
Kit di montaggio gomito HOT20957

Ref. R.O. OEM
HOT28503-MK

Kit montaje para HOT20970
Mounting kit elbow HOT20970
Kit di montaggio gomito HOT20970

Ref. R.O. OEM
HOT20976-MK

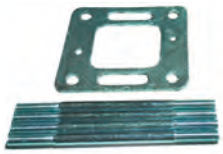

Kit montaje para HOT20976
Mounting kit elbow HOT20976
Kit di montaggio gomito HOT20976

325-325MIE, GM427 CID V8 / 330-330MIE 370TRS - 400TRS - 440TRS - GM454 CID / 390 - 390MIE - 460TRS, GM472 CID V8 - 225 - 225MIE - 250 - 250MIE - GM327CID - 228 - 228MIE - GM305CID - 250 - 270 - 270MIE - 280TRS - GM350 CID V8

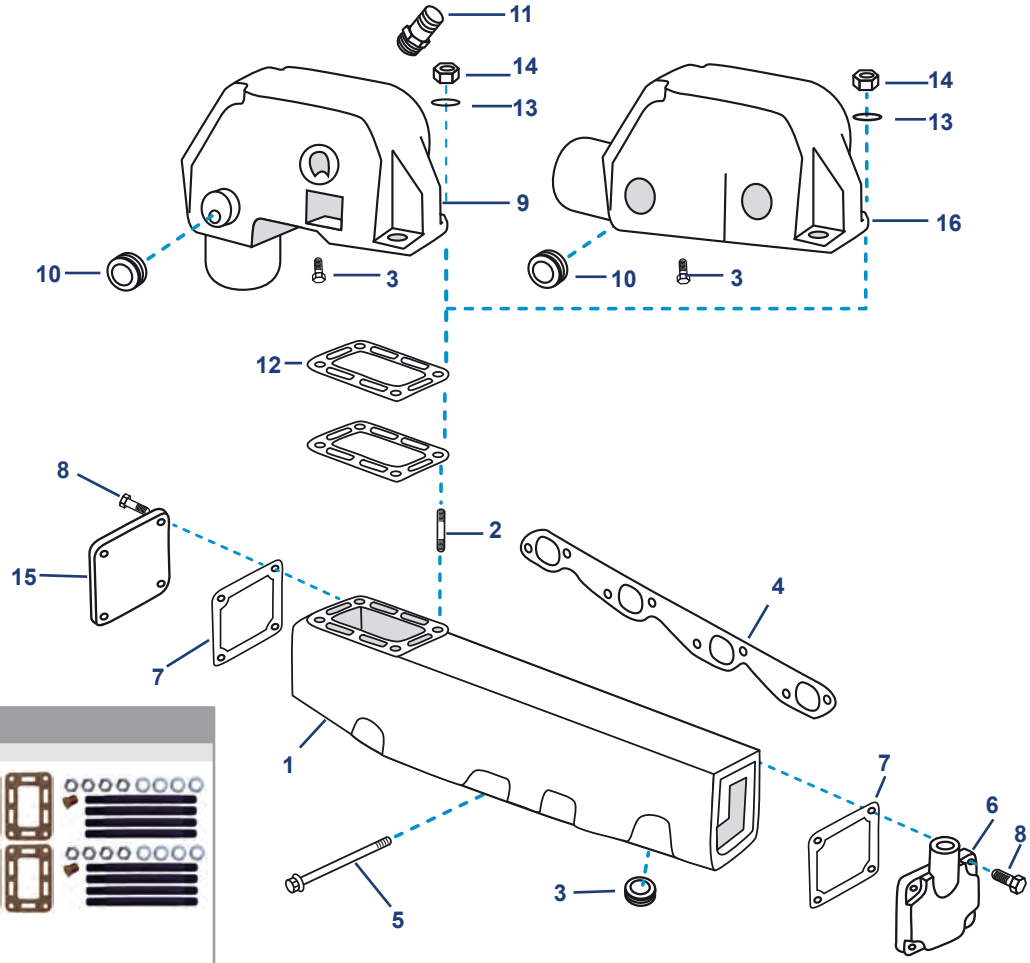

Ref.	R.O. OEM
BAMC20-61811A4	

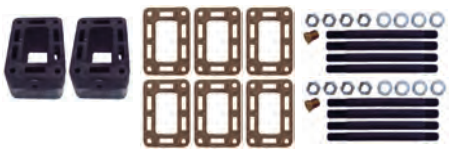

Kit tornillos codo y junta
Elbow gasket & bolt kit
Kit viteria gomito e guarnizione

Nº	Ref.	R.O. OEM	Descripción	Description	Descrizione
1	BAMC1-47735	47735A17	COLECTOR BABOR	PORT MANIFOLD	COLLETTORE DI SINISTRA
1	BAMC1-47736	47736A17	COLECTOR ESTRIBOR	STBD MANIFOLD	COLLETTORE DI DESTRA
1	BAMC1-47737	47737A1	COLECTOR BABOR (225 - 228 - 250 - 270 - 280 - 305 - 327 - 350)	PORT MANIFOLD (225 - 228 - 250 - 270 - 280 - 305 - 327 - 350)	COLLETTORE DI SINISTRA (225 - 228 - 250 - 270 - 280 - 305 - 327 - 350)
1	BAMC1-47738	47738A1	COLECTOR ESTRIBORD (225 - 228 - 250 - 270 - 280 - 305 - 327 - 350)	STBD MANIFOLD (225 - 228 - 250 - 270 - 280 - 305 - 327 - 350)	COLLETTORE DI DESTRA (225 - 228 - 250 - 270 - 280 - 305 - 327 - 350)
2	REC16-49545	16-49545	TORNILLO CODO COLECTOR	STUD MANIFOLD	VITE GOMITO COLLETTORE
3	REC22-328022	22-328022	TAPÓN	CAP	TAPPO
4	REC27-46820	27-46820	KIT JUNTAS COLECTOR	GASKET EXHAUST MANIFOLD	KIT GUARNIZIONI COLLETTORE
4	REC27-33395	27-33395	KIT JUNTAS COLECTOR (225 - 228 - 250 - 270 - 280 - 305 - 327 - 350)	GASKET EXHAUST MANIFOLD (225 - 228 - 250 - 270 - 280 - 305 - 327 - 350)	KIT GUARNIZIONI COLLETTORE (225 - 228 - 250 - 270 - 280 - 305 - 327 - 350)
5	REC10-37612	10-37612	TORNILLO 1 1/4"	SCREW 1 1/4"	VITE 1 1/4"
7	REC27-480431	27-480431	JUNTA	GASKET	GUARNIZIONE
8	REC10-35386	10-35386	TORNILLO TAPA COLECTOR	SCREW MANIFOLD COVER	VITE COPERCHIO COLLETTORE
9	BAMC20-76668	76668A3	CODO ESCAPE	EXHAUST ELBOW	GOMITO SCARICO
10	REC22-41622	22-41622	TAPÓN CODO	ELBOW PLUG	GOMITO SCARICO
11	REC22-866725	22-866725	RACORD COLECTOR	STRAIGHT FITTING	TAPPO GOMITO
12	REC27-48042	27-48042	JUNTA	GASKET	RACCORDO COLLETTORE
13	REC13-35048	13-35048	ARANDELA	WASHER	GUARNAIZIONE
14	REC46335	11-46335	TUERCA CODO	NUT	RONDELLA
15	HGE4870	73813A1	TAPA COLECTOR	MANIFOLD COVER	DADO GOMITO
16	BAMC20-72963	72963A9	CODO ESCAPE	EXHAUST ELBOW	COPERCHIO COLLETTORE

215, 225, 225MIE, 888 Ford 302 V8
233, 233MIE, 255, 255MIE, Ford 351 V8

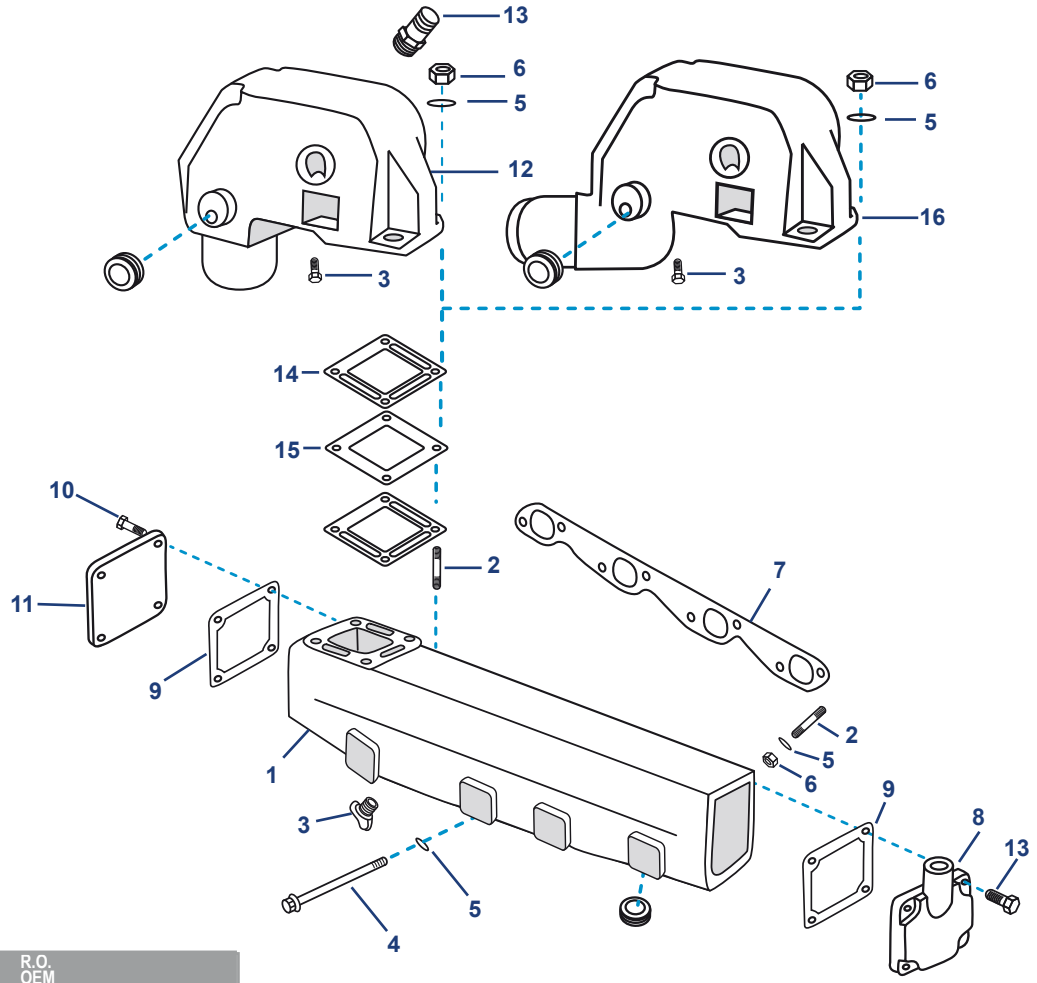

Ref.	R.O. OEM
BAMC20-61851A3	

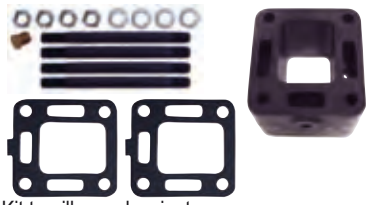

Kit tornillos codo y junta
Elbow gasket & bolt kit
Kit viteria gomito e guarnizione

Ref.	R.O. OEM
HOT20560-MK	NEW

Kit montaje para HOT20962 y HOT20958
Mounting kit elbow HOT20962 / HOT20958
Kit di montaggio gomito HOT20962 e HOT20958

Ref.	R.O. OEM
HOT26371-MK	NEW

Kit montaje para HOT20978 y HOT20971
Mounting kit elbow HOT20978 / HOT20971
Kit di montaggio gomito HOT20978 e HOT20971

	Nº	Ref.	R.O. OEM	Descripción	Description	Descrizione
NEW	1	HOT20962	65603A12	COLECTOR ESTRIBOR	STBD MANIFOLD	COLLETTORE DI DESTRA
NEW	1	HOT20958	65604A12	COLECTOR BABOR	PORT MANIFOLD	COLLETTORE DI SINISTRA
	2	REC16-49545	16-49545	TORNILLO CODO COLECTOR	STUD MANIFOLD	VITE GOMITO COLLETTORE
	3	REC22-328022	22-328022	TAPÓN	CAP	TAPPO
	4	REC10-37612	10-37612	TORNILLO 1 1/4"	SCREW 1 1/4"	VITE 1 1/4"
	5	REC13-35048	13-35048	ARANDELA	WASHER	RONDELLA
	6	REC46335	11-46335	TUERCA CODO	NUT	DADO GOMITO
	7	REC3852455	27-73866	JUNTA COLECTOR ESCAPE	MANIFOLD GASKET	GUARNIZIONE COLLETTORE SCARICO
	8	REC60252A2	60252A2	TAPA COLECTOR	END CAP ASSY	COPERCHIO COLLETTORE
	9	REC27-480431	27-40431	JUNTA	GASKET	GUARNIZIONE
	10	REC10-35386	10-35386	TORNILLO TAPA COLECTOR	SCREW MANIFOLD COVER	VITE COPERCHIO COLLETTORE
	11	HGE4870	73813A1	TAPA COLECTOR	MANIFOLD COVER	COPERCHIO COLLETTORE
NEW	12	HOT20971	76351A04	CODO ESCAPE	EXHAUST ELBOW	GOMITO DI SCARICO
	12	HGE6351	76351A04	CODO ESCAPE	EXHAUST ELBOW	GOMITO DI SCARICO
	13	REC22-866725	27-866725	RACORD COLECTOR	STRAIGHT FITTING	RACCORDO COLLETTORE
	14	REC27-99777Q02	27-99777Q02	JUNTA	GASKET	GUARNIZIONE
	15	REC60207	60207	TAPA COLECTOR	MANIFOLD COVER	COPERCHIO COLLETTORE
NEW	16	HOT20978	76771A2	CODO ESCAPE	EXHAUST ELBOW	GOMITO DI SCARICO

COLECTORES
MANIFOLDS
COLLETTORE

Ref.	R.O. OEM
BAMC-1-63122	63122A10 63122A13 63122A14

DESPIECE PARTS ESPLOSO P. 93

MOTORES / ENGINES / MOTORI
120HP GM153

Ref.	R.O. OEM
REC96705A1	96705A1

DESPIECE PARTS ESPLOSO P. 94

MOTORES / ENGINES / MOTORI
Se adapta a la mayoría de los modelos 3.0L 181 CID con carburador Rochester 2.5L, 153 CID (1968-82)
Fits most models 3.0L 181 CID with Rochester carburator, 2.5L 153 CID (1968-82)
Si adatta alla maggior parte dei modelli 3.0L 181 CID con carburatore Rochester 2.5L, 153 CID (1968-82)

Ref.	R.O. OEM
BAMC-1-95862	95862A5

DESPIECE PARTS ESPLOSO P. 96

MOTORES / ENGINES / MOTORI
Se adapta a la mayoría de los modelos 2.5L 153 CID y 3.0L 181 CID con carburador Rochester (1983-89)
Fits most models 2.5L 153 CID & 3.0L 181 CID with Rochester carburator, (1983-89)
Si adatta alla maggior parte dei modelli 2.5L 153 CID e 3.0L 181 CID con carburatore Rochester (1983-89)

Ref.	R.O. OEM
HOT20956	99798A18 806867A8 806235A04

DESPIECE PARTS ESPLOSO P. 96

MOTORES / ENGINES / MOTORI
Se adapta a la mayoría de los modelos 2.5L 153 CID y 3.0L 181 CID con carburador Mercab y Electric Chore (1983-95)
Fits most models 2.5L 153 CID & 3.0L 181 CID with carburator Mercab & Electric Chore, (1983-95)
Si adatta alla maggior parte dei modelli 2.5L 153 CID e 3.0L 181 CID con carburatore Mercab e Electric Chore (1983-95)

Ref.	R.O. OEM
RM816219A4	816219A4

DESPIECE PARTS ESPLOSO P. 99

R.O. OEM	Descripción	Description	Descrizione	Cantidad Quanty Quantità
98562A6	Suplemento de hierro	Cast iron riser	Supplemento in ghisa	1
816219A5	Colector escape de aluminio	Aluminium exhaust manifold	Collettore scarico in alluminio	1
	Kit de montaje, juntas, entroques...	Mounting kit, gaskets, nipples...	Kit montaggio, guarnizione, raccordi	1

MOTORES / ENGINES / MOTORI
3.7L & 3.7LX
470, 485, 488 (1980-85)
160, 170, 180, 190 3.7L & 3.7LX (1985-89)

Ref.	R.O. OEM
HGE6219-A	816219A5

DESPIECE PARTS ESPLOSO P. 99

MOTORES / ENGINES / MOTORI
3.7L & 3.7LX 170/470 (1980-89)
Colector de escape de aluminio.
Exhaust manifold in aluminium.
Collettore di scarico in alluminio.

Ref.	R.O. OEM
BAMC-1-58759	58759A1 58759A10 58759A13 58759A14

DESPIECE PARTS ESPLOSO P. 100

MOTORES / ENGINES / MOTORI
GM160 & GM165 (6 CYL)

Ref.	R.O. OEM
MAR746	99746A8
NEW HOT20952	99746A17 99746A3

DESPIECE PARTS ESPLOSO P. 102

MOTORES / ENGINES / MOTORI
GM 4.3L & 3.8L V6
175, 185, 205, 229 & 262
(1985-02)

Ref.	R.O. OEM
MAR612	864612T01

DESPIECE PARTS ESPLOSO P. 104

MOTORES / ENGINES / MOTORI
GM4.3L MPI 0M615000+
(2002+) 262

Ref.	R.O. OEM
MAR735	865735A02
NEW HOT20735	864308T01 865049T01

DESPIECE PARTS ESPLOSO P. 106

MOTORES / ENGINES / MOTORI
50L, 5.7L, 6.2L (V8)
305, 350, 377
(2002+)

Ref.	R.O. OEM
MAR246	860246A15 87114A19
NEW HOT20953	860246A3 860246A9 860246A10

DESPIECE PARTS ESPLOSO P. 110

MOTORES / ENGINES / MOTORI
305, 350 & 377 V8GM
(1983-02)

Ref.	R.O. OEM
MAR078	807078T10 807078T09
HOT20957 NEW	807078A6 89011A8

DESPIECE PARTS ESPLOSO P. 112

MOTORES / ENGINES / MOTORI
GM V8 BIG BLOCK
330, 340, 370 (454) 7.4L
502 8.2L

COLECTOR BABOR PORT MANIFOLD COLLETTORE DI SINISTRA		COLECTOR ESTRIBOR STD MANIFOLD COLLETTORE DI DESTRA	
Ref.	R.O. OEM	Ref.	R.O. OEM
HOT20950	77234A7 77234A2	HOT20951	77235A8 77235A2

MOTORES / ENGINES / MOTORI
198, 228, 250, 255, 260, 898, 305CID
(GM V8)
Bloque pequeño con suplemento
Small blocks with end riser
Blocco piccolo con supplemento

DESPIECE PARTS ESPLOSO P. 108

NEW

COLECTOR BABOR PORT MANIFOLD COLLETTORE DI SINISTRA		COLECTOR ESTRIBOR STD MANIFOLD COLLETTORE DI DESTRA	
Ref.	R.O. OEM	Ref.	R.O. OEM
BAMC1-47735	47735A17 47735 47735A1	BAMC1-47736	47736A17 47736

MOTORES / ENGINES / MOTORI
MCM/MIE GM V8 (427, 454 & 482 CID)
(-1981)

DESPIECE PARTS ESPLOSO P. 114

COLECTOR BABOR PORT MANIFOLD COLLETTORE DI SINISTRA		COLECTOR ESTRIBOR STD MANIFOLD COLLETTORE DI DESTRA	
Ref.	R.O. OEM	Ref.	R.O. OEM
BAMC1-47737	47737A10 47737A1	BAMC1-47738	47738A10 47738A1

MOTORES / ENGINES / MOTORI
GM SMALL BLOCK V8 (327, 305, 350)
225, 250, 255, 270 & 280
(1977+)

DESPIECE PARTS ESPLOSO P. 114

COLECTOR BABOR PORT MANIFOLD COLLETTORE DI SINISTRA	
Ref.	R.O. OEM
HOT20958	65604A4 65604A12

COLECTOR ESTRIBOR STD MANIFOLD COLLETTORE DI DESTRA	
Ref.	R.O. OEM
HOT20962	65603A3 65603A12

MOTORES / ENGINES / MOTORI
FORD V8 SMALL BLOCK (302, 351)
215, 225, 225S, 233, 255 & 288
(-1977)

DESPIECE PARTS ESPLOSO P. 115

Ref.	R.O. OEM
BAMC-1-860235	860235A03
HOT20966 NEW	806867A3 806867A12

DESPIECE PARTS ESPLOSO P. 98

MOTORES / ENGINES / MOTORI
GM 181 (1990+)
3.0L OM680000+
3.0LX &3.0TKS PLUS

CODOS
ELBOWS
GOMITI

MERCRUISER

CODO BAJO
LOW ELBOW
GOMITO BASSO

Ref.	R.O. OEM
MAR309	864309T02 864309T01

DESPIECE PARTS ESPLOSO P. 104, 106

MOTORES / ENGINES / MOTORI
GM V6 & V8
262, 305, 350, 377, 383
MPI (2002+)
7º (4" O.D. RISER)

Ref.	R.O. OEM
MAR988	807988A03 807988A2
HOT20976 NEW	807914A1 44354A3

DESPIECE PARTS ESPLOSO P. 102, 110, 112

MOTORES / ENGINES / MOTORI
GM V6 & V8
SMALL & BIG BLOCK
(1983-02)
7º (4" O.D. RISER)

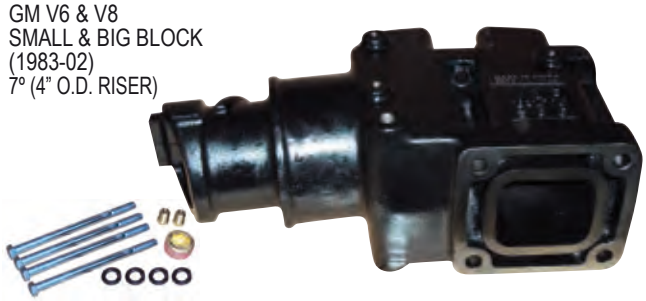

CODO ALTO
HIGH ELBOW
GOMITO ALTO

Ref.	R.O. OEM
MAR591	864591T02
NEW HOT20591	

DESPIECE PARTS ESPLOSO P. 104, 106

MOTORES / ENGINES / MOTORI
GM V6 & V8
262, 305, 350, 377, 385, 6.2L
MPI (2002+)
7º (4" O.D. RISER)

Ref.	R.O. OEM
REC98504A3	98504A3
HOT20970 NEW	

DESPIECE PARTS ESPLOSO P. 102, 110, 112

MOTORES / ENGINES / MOTORI
GM V6 & V8
SMALL & BIG BLOCK
(1983+)
15º (3" O.D. RISER)

Ref.	R.O. OEM
BAMC20-72963	72963A9 72963A1 76788A1 48101A1

DESPIECE PARTS ESPLOSO P. 114

MOTORES / ENGINES / MOTORI
GM V8 (454, 427, 482, 327, 350)
225, 250, 270, 325, 390, 330, 350,
370, 400, 440, 460 (1967-86)
3" O.D. RISER

Ref.	R.O. OEM
HOT20975	12076A2

NEW

DESPIECE PARTS ESPLOSO P. 96, 98

MOTORES / ENGINES / MOTORI
GM 2.5L, 3.0 & 3,0LX
(1982+)
NEW MODEL

Ref.	R.O. OEM
MAR076	12076A2

DESPIECE PARTS ESPLOSO P. 96, 98

MOTORES / ENGINES / MOTORI
GM 2.5L, 3.0 & 3,0LX
(1982+)
NEW MODEL

Ref.	R.O. OEM
HOT20971	76351A04 76351A2 60426A1

DESPIECE PARTS ESPLOSO P. 94, 100, 108, 115

MOTORES / ENGINES / MOTORI
MCM: 140, 470, 165 & 200 (6 CYL INLINE)
GM V8 305,350
FORD V8 302, 351
(-1982)

NEW

Ref.	R.O. OEM
REC76771A2	76771A2 76771A3

DESPIECE PARTS ESPLOSO P. 94, 108, 115

MOTORES / ENGINES / MOTORI
V8 GM & FORD
470 (224/L4)
GM (6 CYL INLINE)
(-1983)

Ref.	R.O. OEM
BAMC-20-55538	55538A2 39920

DESPIECE PARTS ESPLOSO P. 93

MOTORES / ENGINES / MOTORI
120 GM 153 (4 CYL) (1964-82)
160 GM 250 (6 CYL INLINE) (1967-69)

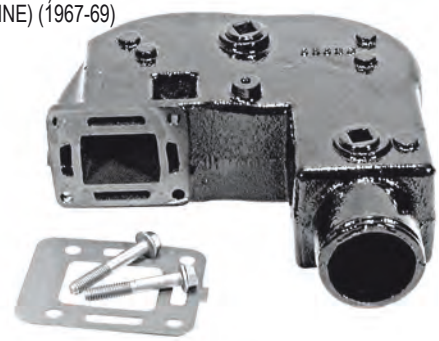

Ref.	R.O. OEM
REC76325A2	76325A2

DESPIECE PARTS ESPLOSO P. 96, 100

MOTORES / ENGINES / MOTORI
GM 2.5L & 3.0L (1982-89)
OLD MODEL (6 CYL INLINE)

Ref.	R.O. OEM
BAMC20-76668	76668A3 76668A1 72964A1 47877A4

DESPIECE PARTS ESPLOSO P. 114

MOTORES / ENGINES / MOTORI
GM (454, 350, 305, 330 V8)
228, 250, 280, 288
Aplicación / Aplication / Aplicazione:
3" O.D. RISER

CODO DE ESCAPE PARA COLECTOR. ALUMINIO
EXHAUST ELBOW FOR MANIFOLD. ALUMINIUM
GOMITO DI SCARICO PER COLLETTORE. ALLUMINIO

Ref.	R.O. OEM
HOT20937	98562A6

DESPIECE PARTS ESPLOSO P. 99

MOTORES / ENGINES / MOTORI
165, 140, 180, 190
3.7L & 3.7 LX
(1985-89)

NEW

CODO DE ESCAPE PARA COLECTOR. HIERRO
EXHAUST ELBOW FOR MANIFOLD. IRON
GOMITO DI SCARICO PER COLLETTORE. GHISA

Ref.	R.O. OEM
HOT20905	90880A2

DESPIECE PARTS ESPLOSO P. 99

MOTORES / ENGINES / MOTORI
165, 170, 180, 190
3.7L & 3.7 LX
MCM (1980-89)

NEW

CODOS INOX 316
ELBOW 316 SS
GOMITI INOS 316

DIESEL

Ref.	R.O. OEM
SED3093300	805602A2

MOTORES / ENGINES / MOTORI
530DTA, 636, D183, D2.8L, D219, D254, D3.0L, D3.6L, D4.2L

Ref.	R.O. OEM
SED3093301	80176320

MOTORES / ENGINES / MOTORI
D183T. / D219T / D530TA

Ref.	R.O. OEM
SED3092000	805602A1

MOTORES / ENGINES / MOTORI
2.8L, D254, D3.6L, D4.2L

Ref.	R.O. OEM
SED3092900	805265A1

MOTORES / ENGINES / MOTORI
QSD 2.8, 4.2 / DSD 2.8, 4.2

CODOS INOX 316
ELBOW 316 SS
GOMITI INOS 316

GAS

Ref.	R.O. OEM
SED3092610	12076A2

MOTORES / ENGINES / MOTORI
4 CYL LATE MODELS

Ref.	R.O. OEM
SED3092600	807988A03

MOTORES / ENGINES / MOTORI
V6 & V-8
7º (4" O.D. RISER)

CODO BAJO
LOW ELBOW
GOMITO BASSO

Ref.	R.O. OEM
SED3095400	864309T02

NEW

MOTORES / ENGINES / MOTORI
GM V6 & V8
262, 305, 350, 377, 383
MPI (2002+)
4" O.D. RISER

CODO ALTO
HIGH ELBOW
GOMITO ALTO

Ref.	R.O. OEM
SED3095500	864591T02

NEW

MOTORES / ENGINES / MOTORI
GM V6 & V8
262, 305, 350, 377, 385, 6.2L
MPI (2002+)
4" O.D. RISER

KITS DE SUPLEMENTOS
RISERS MOUNTING KITS
KIT DISTANZIALI

KIT RISER 3" / 76 MM

Ref.	R.O. OEM	PARA COLECTORES FOR MANIFOLDS PER COLLETTORI
NEW MAR3320PAR	93320A13 807476A6	MAR746 MAR246 MAR078 (-2002)
NEW HOT20908	93320A5	

MOTORES / ENGINES / MOTORI
305, 350, 262, 454, 502 (5.0, 5.7, 4.3, 7.4, 8.2)

AJUSTADOS PARA / FITS / SI ADATTA
MCM V6 & TBI (2 colectores escape / 2 exhaust manifold / 2 colletore di scarico) (-0M614999)
MCM/MIE/SKI V8 (305, 350, 377, 354 & 502 CID) (Codo de hierro / cast iron elbow / gomito in ghisa) (-0M299999)
MCM V8 (305 & 350 CID) Carburador / carburetor / carburatore (0M300000-0M599999)
MIE & SKI Carburador / carburetor / carburatore (0M300000-0M316999)

Ref.	R.O. OEM	PARA COLECTORES FOR MANIFOLDS PER COLLETTORI
REC93320A15	93320A15 93320A10	MAR746 MAR246 MAR078 (-2002)

AJUSTADOS PARA / FITS / SI ADATTA
MCM 4.3L MPI (0M3000000-0M614999) (2001-02)
MCM V8 (305, 350, 377 CID) MPI (0M300000-0M599999) (2001-02)
MIE & SKI V8 (350 & 377 CID) MPI (0M300000-0M316999) (2001-02)
Sólo codos de hierro / Only with cast iron elbows / Solo gomiti in ghisa

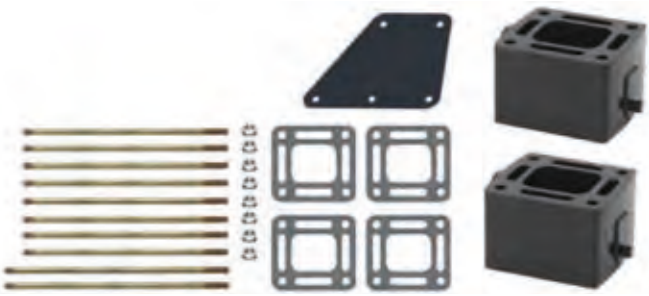

Ref.	R.O. OEM	PARA COLECTORES FOR MANIFOLDS PER COLLETTORI
HGE4929	864929A3	MAR612 HOT20735

MOTORES / ENGINES / MOTORI
350, 357, 377, 383, 385 (MAG, MPI)
GM V6&V8 (4.3, 5.0, 5.7, 6.2) (2002+)

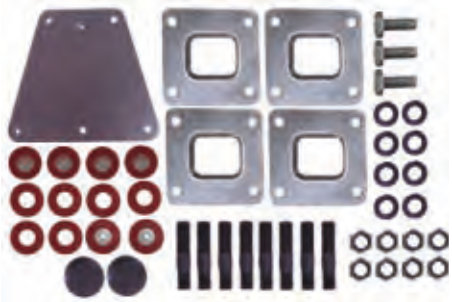

Ref.	R.O. OEM	PARA COLECTORES FOR MANIFOLDS PER COLLETTORI
BAMC20-61811A4	61811A4 61811A3	BAMC1-47736 BAMC1-47737 BAMC1-47738 BAMC1-47735

BASE RECTANGULAR / RECTANGULAR BASE / BASE RETTANGOLARE

MOTORES / ENGINES / MOTORI
GM V8 (427, 454 & 582 CID)
327, 305, 350
225, 250, 255, 270 & 280
(1977+)

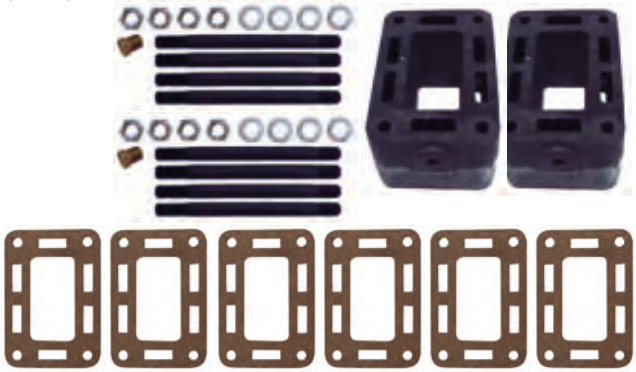

Ref.	R.O. OEM	PARA COLECTORES FOR MANIFOLDS PER COLLETTORI
BAMC20-61851A3	61851A3	REC96705A1 HOT20956 BAMC-1-58759

MOTORES / ENGINES / MOTORI
140 HP (181 4cyl), 120 (2.5L), 153
GM 160, 165 (6 cyl inline)

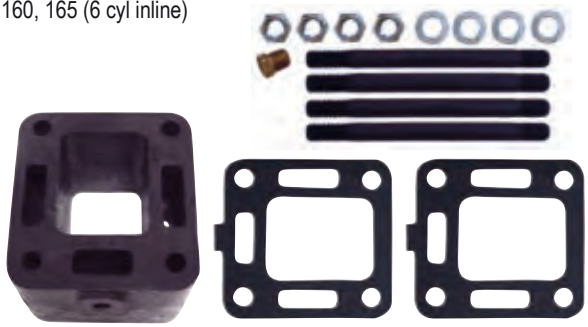

KIT RISER 6" / 152 MM

Ref.	R.O. OEM	PARA COLECTORES FOR MANIFOLDS PER COLLETTORI
HOT20985	93322A12	MAR746 MAR246 MAR078 (-2002)

AJUSTADOS PARA / FITS / SI ADATTA
MCM V6 & TBI (2 colectores escape / 2 exhaust manifold / 2 colletore di scarico) (-0M614999)
MCM/MIE/SKI V8 (305, 350, 377, 354 & 502 CID) (Codo de hierro / cast iron elbow / gomito in ghisa) (-0M299999)
MCM V8 (305 & 350 CID) Carburador / carburetor / carburatore (0M300000-0M599999)
MIE & SKI Carburador / carburetor / carburatore (0M300000-0M316999)

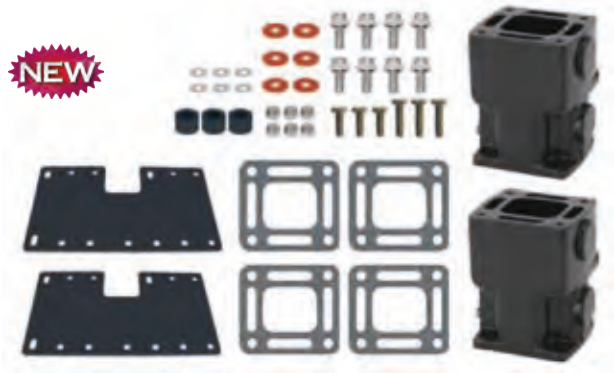

Ref.	R.O. OEM	PARA COLECTORES FOR MANIFOLDS PER COLLETTORI
BAMC-20-864908A1	864908A1	MAR612 HOT20735

MOTORES / ENGINES / MOTORI
350, 357, 377, 383, 385 (MAG, MPI)
GM V6&V8 (4.3, 5.0, 5.7, 6.2)
(2002+)

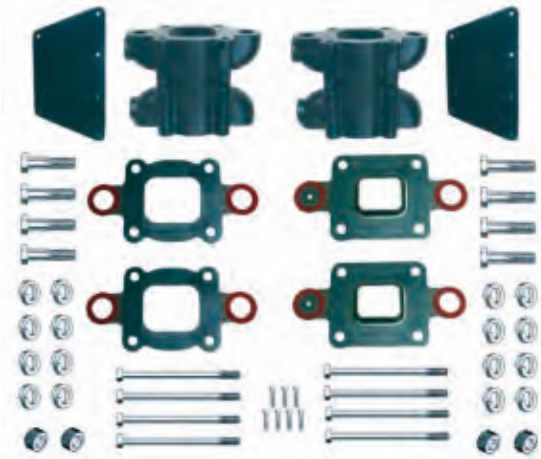

EXTENSORES DE ESCAPE
EXHAUST EXTENSIONS
ESTENSIONI DI SCARICO

Ref.	R.O. OEM	Ø
BAMC-20-14478	14478T01 14478T	4"

MOTORES / ENGINES / MOTORI
175, 205, 229, 262 (V6) (1983-05)
200, 320, 305, 350, 377 (V8) (1993+)
330, 370, 454, 502 (V8 BIG BLOCK) (1981+)

Ref.	R.O. OEM
RM14801A1	14801A1

MOTORES / ENGINES / MOTORI
5.0, 5.7, 6.2L V8
(1998+)
INSTALAR EN MODELOS CON KITS DE RISER DE 3" & 6"
INSTALL IN MODELS WITH 3" & 6" RISER KITS
INSTALLARE NEI KIT DEI RISER DA 3" e 6"

Ref.	R.O. OEM
RM14865A1	14865A1

MOTORES / ENGINES / MOTORI
262, 4.6 (V6)
(1996+)
INSTALAR EN MODELOS CON KITS DE RISER DE 3" & 6"
INSTALL IN MODELS WITH 3" & 6" RISER KITS
INSTALLARE NEI KIT DEI RISER DA 3" e 6"

Ref.	R.O. OEM
RM807130A4	807130A4 8M0115149 44266T 44266T1

MOTORES / ENGINES / MOTORI
"Y" PIPE V6 & V8, Alpha, Bravo
4.3, 5.0, 5.7, 6.2, 7.4, 8.2L GM
4.5L MPI
7º 4" Codos / Elbows / Gomiti

TAPAS Y JUNTAS
CAPS & GASKETS
COPERCHI E GUARNIZIONE

TAPA COLECTOR
END CAP MANIFOLD
COPERCHIO COLLETTORE

Ref.	R.O. OEM	PARA COLECTORES FOR MANIFOLDS PER COLLETTORI
BA1-47638	47638A1	BAMC-1-63122

Ref.	R.O. OEM	PARA COLECTORES FOR MANIFOLDS PER COLLETTORI
HGE4870	73813A1	BAMC1-47735 BAMC1-47736 BAMC1-47737 BAMC1-47738 REC96705A1 BAMC-1-95862 HOT20956 BAMC-1-58759

Ref.	R.O. OEM	PARA COLECTORES FOR MANIFOLDS PER COLLETTORI
REC60252A2	60252A2	REC96705A1 BAMC-1-58759 HOT20950 HOT20951 BAMC1-47735 BAMC1-47736 BAMC1-47737 BAMC1-47738 HOT20962 HOT20958

Ref.	R.O. OEM	PARA COLECTORES FOR MANIFOLDS PER COLLETTORI
REC805629A1	805629A1	BAMC-1-95862 HOT20956

JUNTAS TAPAS LATERALES
LATERAL GASKET CAPS
GUARNIZIONE COPERCHIO LATERALE

TAPA POSTERIOR INTERCAMBIADOR
HEAT EXCHANGER END CAP
COPERCHIO POSTERIORE SCAMBIATORE

Ref.	R.O. OEM
REC27-99960	27-99960

MOTORES / ENGINES / MOTORI
224 CID (1976-89)

TAPA DELANTERA INTERCAMBIADOR
HEAT EXCHANGER CAP
COPERCHIO ANTERIORE SCAMBIATORE

Ref.	R.O. OEM
REC27-75450	27-75450

MOTORES / ENGINES / MOTORI
224 CID (1976-82)

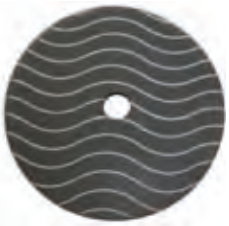

Ref.	R.O. OEM	PARA TAPAS FOR CAPS PER COPERCHIO
REC27-39917	27-39917	BA1-47638

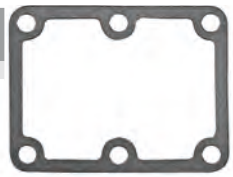

Ref.	R.O. OEM	PARA TAPAS FOR CAPS PER COPERCHIO
BAMC47-27-39923	27-39923	39916 NO DISPONIBLE NOT AVAILABLE NON DISPONIBILE

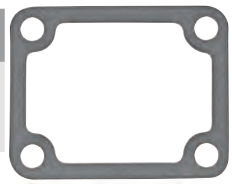

Ref.	R.O. OEM	PARA TAPAS FOR CAPS PER COPERCHIO
REC27-807218	27-807218	HGE4870 REC805629A1

Ref.	R.O. OEM	PARA TAPAS FOR CAPS PER COPERCHIO
REC27-480431	27-480431	REC60252A2

JUNTAS COLECTOR-CODO
MANIFOLD-ELBOW GASKET
GUARNIZIONE COLLETTORE-GOMITO

Ref.	R.O. OEM	PARA CODOS FOR ELBOWS PER GOMITI
REC27-39915	27-39915	BAMC-20-55538

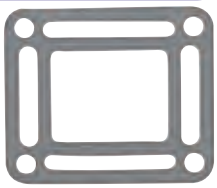

Ref.	R.O. OEM	PARA CODOS FOR ELBOWS PER GOMITI
REC27-99777Q02	27-99777Q02 27-997771 27-997772	HOT20971 REC76771A2 MAR076 REC76325A2

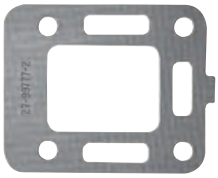

Ref.	R.O. OEM	PARA CODOS FOR ELBOWS PER GOMITI
REC27-18272	27-18272	HOT20937 ALUMINIO ALUMINIUM ALLUMINIO

Ref.	R.O. OEM	PARA CODOS FOR ELBOWS PER GOMITI
REC27-856705	27-856705 27-97542	HOT20905 HIERRO IRON GHISA

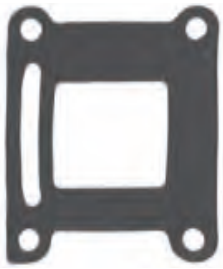

Ref.	R.O. OEM	PARA CODOS FOR ELBOWS PER GOMITI
REC27-8637251	27-8637251 860231 863725	MAR988 REC98504A3

Ref.	R.O. OEM	PARA CODOS FOR ELBOWS PER GOMITI
REC27-48042	27-48042	BAMC20-76668 BAMC20-72963

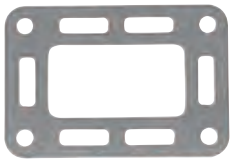

Ref.	R.O. OEM	PARA COLECTORES FOR MANIFOLDS PER COLLETTORI
REC27-8079821	27-8079821 27-70143 27-701431 27-807982	BAMC-1-860235 HOT20956

Para carburadores Mercab
For Mercab carburators
Per carburatori Mercab

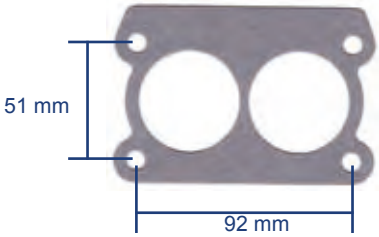

Ref.	R.O. OEM	PARA COLECTORES FOR MANIFOLDS PER COLLETTORI
REC27-64692	27-64692	REC96705A1 BAMC-1-95862

Para carburadores Rochester
For Rochester carburators
Per carburatori Rochester

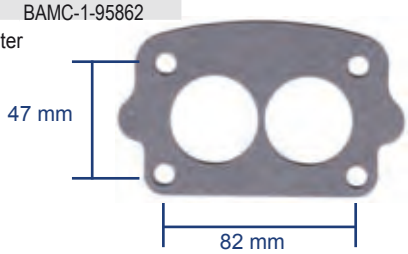

Ref.	R.O. OEM	PARA CODOS FOR ELBOWS PER GOMITI
REC27-863724Q	27-863724Q 27-41813 27-860233 27-863724	MAR988 REC98504A3

Ref.	R.O. OEM	PARA CODOS FOR ELBOWS PER GOMITI
REC27-863726	27-863726 27-871051 27-818832 27-860232	MAR988 REC98504A3

Ref.	R.O. OEM	PARA CODOS FOR ELBOWS PER GOMITI
REC270	27-864547A02 27-864550A02 27-864549A02	MAR309 MAR591

JUNTAS COLECTOR-CULATA
MANIFOLD-HEAD GASKET
GUARNIZIONE COLLETTORE-TESTATA

Ref.	R.O. OEM	PARA COLECTORES FOR MANIFOLDS PER COLLETTORI
REC27-68715	27-68715	HGE6219-A

MOTORES / ENGINES / MOTORI
MCM 3.7L (4 cyl)

Ref.	R.O. OEM	PARA COLECTORES FOR MANIFOLDS PER COLLETTORI
REC27-52546 FEL17300	27-52546	BAMC-1-63122

MOTORES / ENGINES / MOTORI
GM 153 (4 cyl)

Ref.	R.O. OEM	PARA COLECTORES FOR MANIFOLDS PER COLLETTORI
REC27-53354 FEL17301	27-53354	REC96705A1

MOTORES / ENGINES / MOTORI
GM 181 (4 cyl)

Ref.	R.O. OEM	PARA COLECTORES FOR MANIFOLDS PER COLLETTORI
REC27-96429	27-96429	BAMC-1-95862 HOT20956

MOTORES / ENGINES / MOTORI
GM 153 & 181 (4 cyl)

Ref.	R.O. OEM	PARA COLECTORES FOR MANIFOLDS PER COLLETTORI
REC27-815528 FEL17304	27-815528	BAMC-1-860235

MOTORES / ENGINES / MOTORI
GM 181 (4 cyl)

Ref.	R.O. OEM	PARA COLECTORES FOR MANIFOLDS PER COLLETTORI
FEL17319	27-46401	BAMC-1-58759

MOTORES / ENGINES / MOTORI
GM 250 (6 cyl Inline)

Ref.	R.O. OEM		PARA COLECTORES FOR MANIFOLDS PER COLLETTORI
REC27-99757	27-99757	1	MAR746
FEL17410	27-99757	2	MAR612

MOTORES / ENGINES / MOTORI
GM V6

Ref.	R.O. OEM		PARA COLECTORES FOR MANIFOLDS PER COLLETTORI
REC27-33395	27-33395	1	HOT20735 HOT20950 HOT20951 MAR246
FEL17420	27-33395	2	

MOTORES / ENGINES / MOTORI
GM V8 SMALL BLOCK

Ref.	R.O. OEM		PARA COLECTORES FOR MANIFOLDS PER COLLETTORI
REC27-46820	27-46820	1	MAR078 BAMC1-47735 BAMC1-47736
FEL17440	27-46820	2	

MOTORES / ENGINES / MOTORI
GM V8 BIG BLOCK

Ref.	R.O. OEM		PARA COLECTORES FOR MANIFOLDS PER COLLETTORI
REC3852455	27-73866	1	HOT20958 HOT20962
FEL17460	27-73866	2	

MOTORES / ENGINES / MOTORI
FORD V8 (302, 351)

FUELLES DE ESCAPE
EXHAUST BELLOW
CUFFIA DI SCARICO

Ref.	R.O. OEM
REC53114A1	53114A1
CEF500524	53114

MOTORES / ENGINES / MOTORI
120, 140, 160, 165 (GM 181 & 250)
(1967-82)

Ref.	R.O. OEM
REC70981A3 CEF500523	70981A3

MOTORES / ENGINES / MOTORI
3" - 4" (76 - 101 mm) I.D

Ref.	R.O. OEM
REC32-90949T CEF500511K	32-90949T

MOTORES / ENGINES / MOTORI
3" (76 mm) I.D

Ref.	R.O. OEM
REC32-44348001 CEF500507K	32-44348001 32-44348T 32-44348

MOTORES / ENGINES / MOTORI
4" (101 mm) I.D
Tubo superior / upper tubo / Tubo superiore

Ref.	R.O. OEM
REC32-14358001 CEF500508K	32-14358001 32-14358T 32-14358

MOTORES / ENGINES / MOTORI
4" (101 mm) I.D
Tubo inferior tubo / lower tubo / Tubo inferiore

Ref.	R.O. OEM
REC32-807458T CEF500532K	32-807458T

MOTORES / ENGINES / MOTORI
4.3L (1996+)
4" (101 mm) I.D

PALOMILLAS DE ESCAPE
WATER SHUTTER
FARFALLA DI SCARICO

Ref.	R.O. OEM
REC99370A2	99370A2

MOTORES / ENGINES / MOTORI
3" (76 mm)
V6-V8 (1982-87)

Ref.	R.O. OEM
REC807166A1	807166A1

MOTORES / ENGINES / MOTORI
4" (101 mm)
V6-V8 (1992+)
4.5L MPI

Ref.	R.O. OEM	
REC807166A3	807166A3 14348A1	2

MOTORES / ENGINES / MOTORI
4" (101 mm)
V6-V8 (1992-95)
D3.0, D3.6, D4.2L

Ref.	R.O. OEM
REC60930	60930

MOTORES / ENGINES / MOTORI
4 cyl 140 / 3.0L / 3.0LX

AJUSTADOS PARA / FITS / SI ADATTA
V8
TDI 4.2L (335, 370 MCM/MIE)

COLECTORES ADMISIÓN
INTAKE MANIFOLD
COLLETTORE ASPIRAZIONE

Ref.	R.O. OEM	TORNILLOS SCREW VITI
MP425036	824330 824330T	8

MOTORES / ENGINES / MOTORI
GM 262, 4.3 (V6)
VORTEC (4 bbl)
Hierro / Iron / In ghisa
(1993+)

Ref.	R.O. OEM	TORNILLOS SCREW VITI
MP425024	824324T 824324	8

MOTORES / ENGINES / MOTORI
GM 262, 4.3 (V6)
VORTEC (2 bbl)
Hierro / Iron / In ghisa
(1993+)

Ref.	R.O. OEM	TORNILLOS SCREW VITI
REC425062	807289A1	8

MOTORES / ENGINES / MOTORI
GM V8 (350, 5.7)
VORTEC (4 bbl)
(1993+)

Ref.	R.O. OEM	TORNILLOS SCREW VITI
MP425113	811575 811575T 59974	16

MOTORES / ENGINES / MOTORI
GM V8 BIG BLOCK 427 & 454 (1969-97)
GEN IV, V, VI (4 bbl)

Ref.	R.O. OEM	TORNILLOS SCREW VITI
MP425149	72608 72608T	16

MOTORES / ENGINES / MOTORI
GM 454, 482, 502
(1978-97)

TERMOSTATOS
THERMOSTATS
TERMOSTATI

KIT CUERPOS TERMOSTATO
THERMOSTAT HOUSINGS
CORPO TERMOSTATO

Ref.	R.O. OEM
REC87290A23	87290A26

MOTORES / ENGINES / MOTORI
V6 y V8 bloque pequeño.
For V6 and V8 small blocks.
Per V6 e V8 blocco piccolo.

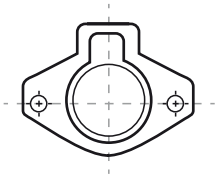

Los agujeros del colector de admisión están a 90º del centro del cigüeñal.
Intake manifold bolt holes at 90º from the crankshaft centerline.
I fori del collettore di aspirazione sono a 90º dal centro dell'albero motore.

NOTA: reemplaza a este cuerpo
NOTE: replaces this housing
NOTA: sostituisce questo modello

Ref.	R.O. OEM
REC90736A24	90736A24

MOTORES / ENGINES / MOTORI
V6 y V8 bloque grande.
For V6 and V8 big blocks.
Per V6 e V8 blocco grande.

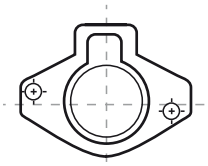

Los agujeros del colector de admisión están a 80º del centro del cigüeñal.
Intake manifold bolt holes at 80º from the crankshaft centerline.
I fori del collettore aspirazione sono a 80º dal centro dell'albero motore.

NOTA: reemplaza a este cuerpo
NOTE: replaces this housing
NOTA: sostituisce questo modello

CUERPOS TERMOSTATO
THERMOSTAT HOUSINGS
CORPO TERMOSTATO

Ref.	R.O. OEM
BAMC29-47587	861493A07 47587A2 47587 861493A3

MOTORES / ENGINES / MOTORI
GM 153, 181, 250, 292, 120, 140, 2.5L, 3.0, 3.0LX (4 cyl) (1964-97)
160, 165, 200 (6 cyl) (1967-81)

Ref.	R.O. OEM
REC78984A08	78984A08 78984A1

MOTORES / ENGINES / MOTORI
198 MIE (2 bbl) GM 305 V8 (1977)
228, 228 MIE (4 bbl) GM 305 V8 (1977-80)
225 MIE GM 350 V-8 (1979-80)
260 (4 bbl) GM 350 V-8 (1978-82)
898 (2 bbl) GM 350 V-8 (1977-82)

Ref.	R.O. OEM
REC87290A4	87290A4

MOTORES / ENGINES / MOTORI
4.3L V6 (1983-92)
5.0 & 5.7L V8 (1981-95)
Race sterndrive GM454, 502 & 540 (1986-96)

Ref.	R.O. OEM
RM863457A2	863457A2

MOTORES / ENGINES / MOTORI
4.3L, 350 MAG, 5.0L, 6.2L (MPI & MX)
Todos inyección con 1 o 3 puntos de drenaje.
All Injection with 1 or 3 point drain system.
Tutti i motori ad iniezione con 1 o 3 punti di drenaggio.

Ref.	R.O. OEM
BAMC29-63588	889333 63588A1

MOTORES / ENGINES / MOTORI
FORD V8
302 (1971-77)
351 (1973-77)

Ref.	R.O. OEM
REC861188A1	861188A1

MOTORES / ENGINES / MOTORI
V6 y V8 con circuito de agua cerrado.
V6 & V8 with raw water cooling system.
V6 e V8 con circuito di acqua chiuso.

Ref.	R.O. OEM
BAMC29-78985	78985A1

MOTORES / ENGINES / MOTORI
330 GM454 V8 (1977-81)

Ref.	R.O. OEM
REC55131A5	55131A5

MOTORES / ENGINES / MOTORI
V6 y V8 con circuito de agua cerrado.
V6 & V8 with raw water cooling system.
V6 e V8 con circuito di acqua chiuso.

ACERO INOXIDABLE
STAINLESS STEEL
ACCIAIO INOX

Ref.	R.O. OEM
REC8M0061381	861006A1 8M0061381 860256A4

MOTORES / ENGINES / MOTORI
GM V6 & V8 (305, 350, 357, 383)
4.3, 5.0, 5.7, 6.2L
7.4 & 8.2L
(1998+)
Con cola Bravo. Incluye kit de casquillos para adaptarse a cualquier colector.
With Bravo sterndrive. Includes bushing kit to fit any manifold.
Con piede Bravo. Il kit include boccole per adattarsi a qualsiasi collettore.

EJE VÁLVULA TERMOSTATO
CHECK BALL KIT
ALBERINO TERMOSTATO

Ref.	R.O. OEM
REC30-98475T1	30-98475T1

MOTORES / ENGINES / MOTORI
MCM R/MR/ALPHA ONE (1983-90)

CASQUILLO TERMOSTATO
THERMOSTAT SLEEVE
BOCCOLA TERMOSTATO

Ref.	R.O. OEM
REC23-806922	23-806922

MOTORES / ENGINES / MOTORI
Para la mayoría de 3.0L, V6, V8
Fits most 3.0L, V6, V8
Si adatta maggiormente 3.0L, V6, V8

VÁLVULA "T" TERMOSTATO
TEE VALVE ASSEMBLY
VALVOLA "T" TERMOSTATO

Ref.	R.O. OEM	CUERPO DE TERMOSTATO THERMOSTAT HOUSING CORPO TERMOSTATO
REC22-98477A2	22-98477A2	REC87290A4

MOTORES / ENGINES / MOTORI
GM V6 & V8

MÓDULO DISTRIBUCIÓN DE AGUA
WATER DISTRIBUTION MODULE
MODULO DISTRIBUZIONE ACQUA

Ref.	R.O. OEM
RM863631T1	863631T1

MOTORES / ENGINES / MOTORI
GM 4.3, 5.0, 5.7 & 6.2L (MPI)
Drenaje manual
Manual drain
Drenaggio manuale

Ref.	R.O. OEM
RM863444T1	863444T1

MOTORES / ENGINES / MOTORI
GM 4.3, 5.0, 5.7 & 6.2L (MPI)
Varilla accionada
Rod actuated
Asta azionata

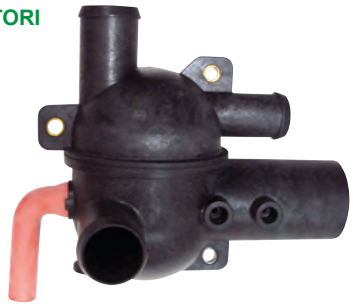

TAPA TERMOSTATO
THERMOSTAT COVER
COPERCHIO TERMOSTATO

Ref.	R.O. OEM	CUERPO DE TERMOSTATO THERMOSTAT HOUSING CORPO TERMOSTATO
BAMC29-60372	60372A1 60372A2 861493A07	BAMC29-47587

MOTORES / ENGINES / MOTORI
4 & 6 cyl inline

Ref.	R.O. OEM	CUERPO DE TERMOSTATO THERMOSTAT HOUSING CORPO TERMOSTATO
BAMC29-62898	62898A1 62898 Con colas / With sterndrive / Con Piede	BAMC29-63588
BAMC29-59498	59498 59498A1 Con Eje / With Shaft / Con asse	BAMC29-63588

MOTORES / ENGINES / MOTORI
FORD V8 (302, 351)

Ref.	R.O. OEM	CUERPO DE TERMOSTATO THERMOSTAT HOUSING CORPO TERMOSTATO
REC47441A1	47441A1	REC87290A4

MOTORES / ENGINES / MOTORI
262 V6 / 305, 350 V8 SMALL BLOCK

Ref.	R.O. OEM	CUERPO DE TERMOSTATO THERMOSTAT HOUSING CORPO TERMOSTATO
REC8M0061068	47442A1	BAMC29-78985

MOTORES / ENGINES / MOTORI
454, 502, V8 BIG BLOCK

JUNTAS TERMOSTATO
THERMOSTAT GASKET
GUARNIZIONE TERMOSTATO

Ref.	R.O. OEM	CASQUILLO SLEEVE BOCCOLA
REC25-30224	25-30224	REC23-806922
REC27-47510Q	27-47510Q	REC23-47508T

REC25-30224

REC27-47510Q

CUERPO TERMOSTATO A CULATA
THERMOSTAT HOUSING TO CYLINDER HEAD
CORPO TERMOSTATO-TESTATA

Ref.	R.O. OEM	CUERPO DE TERMOSTATO THERMOSTAT HOUSING CORPO TERMOSTATO
REC27-8146801	27-8146801	BAMC29-47587

MOTORES / ENGINES / MOTORI
4 & 6 cyl inline

JUNTA A CUERPO TERMOSTATO
COVER TO THERMOSTAT HOUSING
DAL COPERCHIO AL CORPO TERMOSTATO

Ref.	R.O. OEM
REC27-33179Q02	27-33179Q02

Ref.	R.O. OEM
REC17494A1	17494A1

Tapa y junta
Cover & gasket
Coperchio e guarnizione

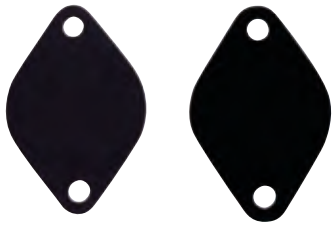

BY-PASS A TERMOSTATO
THERMOSTAT TO BY-PASS
BY-PASS - TERMOSTATO

Ref.	R.O. OEM
REC27-41812Q	27-41812Q 27-41812

MOTORES / ENGINES / MOTORI
GM V6 / V8 SMALL BLOCK

Ref.	R.O. OEM
REC27-418122	27-418122

MOTORES / ENGINES / MOTORI
GM 454 / 502 V8 BIG BLOCK

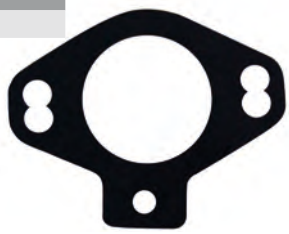

Ref.	R.O. OEM
REC27-48818Q01	27-48818Q01

MOTORES / ENGINES / MOTORI
GM V8, SMALL & BIG BLOCK

Ref.	R.O. OEM
REC27-475901	27-47590-1

MOTORES / ENGINES / MOTORI
4 & 6 cyl inline

Ref.	R.O. OEM
REC27-60208Q	27-60208

MOTORES / ENGINES / MOTORI
Ford 302 / 351

CUERPO TERMOSTATO A COLECTOR ADMISIÓN
THERMOSTAT HOUSING TO INTAKE MANIFOLD
DAL CORPO TERMOSTATO AL COLLETTORE ASPIRAZIONE

Ref.	R.O. OEM
REC27-53045Q01	27-53045Q01 53051

MOTORES / ENGINES / MOTORI
GM V6 & V8

Ref.	R.O. OEM
REC27-33918	27-8M2021920

MOTORES / ENGINES / MOTORI
GM 4 & 6 cyl inline

Ref.	R.O. OEM
REC27-54506	27-5450

MOTORES / ENGINES / MOTORI
FORD 302/351

Ref.	R.O. OEM
REC27-89656-1	27-89656-1

MOTORES / ENGINES / MOTORI
MCM 470 3,7 L (1976-82)

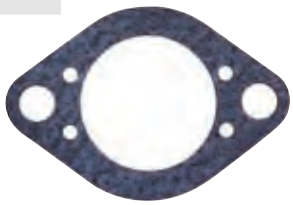

DEPOSITO A CUERPO TERMOSTATO
TANK TO THERMOSTAT HOUSING
DAL SERBATOIO AL CORPO TERMOSTATO

Ref.	R.O. OEM
REC27-74830	27-74830

MOTORES / ENGINES / MOTORI
MCM 470 3.7L (1976-82)

TERMOSTATOS Y KITS
THERMOSTAT & KITS
TERMOSTATI E KIT

Ref.	R.O. OEM	°C	
REC59078	59078	140º	
REC59078Q3	59078Q3	140º	KIT

MOTORES / ENGINES / MOTORI
4 & 6 cyl inline

REC59078

REC59078Q3

Ref.	R.O. OEM	°C
REC8M0091470	807252T2 8M0091470	160º

MOTORES / ENGINES / MOTORI
GM V6 & V8, 181º
Modelos modernos / late models / modelli moderni
Inox. / Stainless steel / Inos.

Ref.	R.O. OEM	°C	
REC807252Q5	807252Q5	160º	KIT

MOTORES / ENGINES / MOTORI
GM V6 & V8
Mercruiser modernos / late models / I modelli moderni

Ref.	R.O. OEM	°C	
REC807252Q3	807252Q3	140º	KIT

MOTORES / ENGINES / MOTORI
FORD V8

Ref.	R.O. OEM	°C	
REC99155T2	99155T2	160º	KIT

MOTORES / ENGINES / MOTORI
4 cyl 224 (3.7L)
Motores con colector escape de aluminio y circuito de refrigeración cerrado.
Engines with closed cooling & aluminum exhaust manifold
Motori con circuito di refrigerazione chiuso e colettore di scarico in alluminio

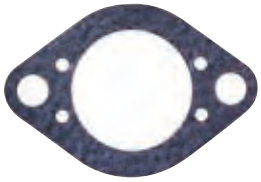

Ref.	R.O. OEM	°C
REC8M0089715	807252T1 8M0089715	140º

MOTORES / ENGINES / MOTORI
GM V6 & V8, Ford V8

Ref.	R.O. OEM	°C	
REC807252Q4	807252Q4 807252T4	140º	KIT

MOTORES / ENGINES / MOTORI
GM V6 & V8

Ref.	R.O. OEM	°C
REC864493	864493	170º

MOTORES / ENGINES / MOTORI
4.3L CARB ALPHA / BRAVO
4.3L MPI ALPHA / BRAVO
4.5L MPI
350 MAG MPI ALPHA / BRAVO
357 HRZ
377 MAG MPI
5.0L MPI ALPHA / BRAVO
5.7L MPI
6.2L MPI

NEW

BOMBAS DE AGUA
WATER PUMPS
POMPE ACQUA

Ref.	R.O. OEM
PH600-0004	884727 8M0113733

MOTORES / ENGINES / MOTORI
GM 4 & 6 CYL INLINE

Ref.	R.O. OEM
PH600-0005	8503991 8M0113734

MOTORES / ENGINES / MOTORI
GM V6 & V8 SMALL BLOCK

Ref.	R.O. OEM
PH600-0002	8504541

MOTORES / ENGINES / MOTORI
GM V8 BIG BLOCK

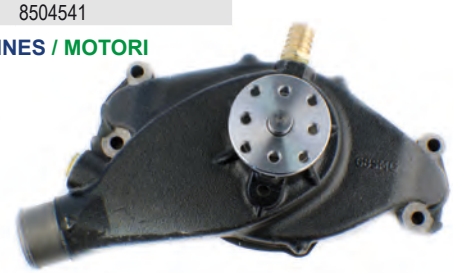

Ref.	R.O. OEM
PH600-0003	883925 8M0113736

MOTORES / ENGINES / MOTORI
GM 8.1L

Ref.	R.O. OEM
PH600-0006	883885

MOTORES / ENGINES / MOTORI
FORD V8 302,351

Ref.	R.O. OEM
REC879194401	46-879194401 8M0094406 8M6005225

MOTORES / ENGINES / MOTORI
V6 (2007+) Sin bypass / without water bypass hole / senza bypass
MCM MPI (OW658583+)
MCM Carb. (1A063240+)

Ref.	R.O. OEM	IMPULSOR IMPELLER GIRANTE
RM46-807151A8	46-807151A8 46-72774A69	REC47-59362Q01

MOTORES / ENGINES / MOTORI
Mercruiser 454 Magnum 7.4 & 502
Con acople bomba gasolina.
Includes fuel pump adapter.
Con accoppiamento pompa benzina.
GEN V & VI (1992-99)

Ref.	R.O. OEM	KIT REPARACIÓN REPAIR KIT KIT RIPARAZIONE	IMPULSOR IMPELLER GIRANTE
SHEG155	806152	SHE15979	REC47-59362Q01

MOTORES / ENGINES / MOTORI
Mercruiser 7.3L Diesel
7.3L (BRAVO & MIE)
DIESEL NAV 444 V-8 (1994-96)
(OF060000+)

Ref.	R.O. OEM	IMPULSOR IMPELLER GIRANTE
SHEG151	805835	SHE15000K

MOTORES / ENGINES / MOTORI
7.3L (BRAVO & MIE) DIESEL NAV444 V-8 (1994-96)
D7.3L D-TRONIC 260LD (1999)
D 7.3L D-TRONIC 300 (1999)

NEW

Ref.	R.O. OEM	IMPULSOR IMPELLER GIRANTE
REC46-807151A9	46-807151A9	REC47-59362Q01

MOTORES / ENGINES / MOTORI
De bronce con tornillería inox. Motores V6 y V8 con correa serpentín.
Sea Water Pump. Brass assembly with stainless steel fittings for V6 & V8 engines with serpentine belt.
In bronzo con viteria inox. Motori V6 e V8 con cinghia serpentina.

NEW

POLEA PULLEY PULIGGIA	R.O. OEM
REC861579	861579 807731T

Ref.	R.O. OEM	IMPULSOR IMPELLER GIRANTE
REC46-862914T10	46-862914T10	REC47-862232A2

MOTORES / ENGINES / MOTORI
4.3L MPI, 5.0L MPI, 350 MAG MPI & MX, 8.2L MAG
6.2L MPI con / with / con ECM 555
De bronce con tornillería inox.
Brass assembly with stainless steel fittings.
In bronzo con viteria inox.

NEW

POLEA PULLEY PULIGGIA	R.O. OEM
REC862351T	862351T

Ref.	R.O. OEM	IMPULSOR IMPELLER GIRANTE
SHEP1016	854179001	SHE10615K

MOTORES / ENGINES / MOTORI
MERCRUISER CUMMINS MARINE
CMD 2.8 EI, ES (170/200)
CMD QSD 2.8 EI, ES (170/210/220/230)
CMD QSD 2.0 EI,ES (115/130/150)

NEW

Ref.	R.O. OEM	IMPULSOR IMPELLER GIRANTE
REC46-72774A32	46-807151A12 46-72774A32 46-59112A2 46-63450A2 46-72774A11 46-73823A7	REC47-59362Q01 REC47-59362A4 (KIT)

MOTORES / ENGINES / MOTORI
De bronce con tornillería inox. MotoresV6 & V8 con correa "V"
Brass assembly with stainless steel fittings for V6 & V8 engines with V-belt.
In bronzo con viteria inox Motori V6 & V8 con cinghia a "V".

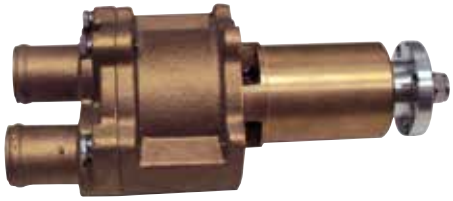

Ref.	R.O. OEM	IMPULSOR IMPELLER GIRANTE
SHEG2603X		SHE26000K

MOTORES / ENGINES / MOTORI
Cummins Diesel

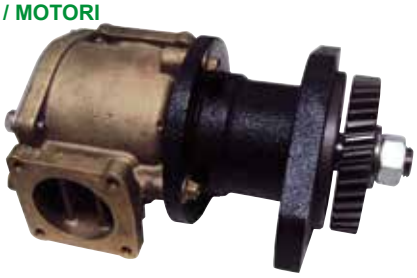

JUNTAS BOMBA AGUA
SEA WATER GASKET
GUARNIZIONE POMPA DELL'ACQUA

Ref.	R.O. OEM	BOMBA PUMP POMPA
REC27-803192A2	24-803192A2	PH600-0002

MOTORES / ENGINES / MOTORI
454-502 CHEVY

Ref.	R.O. OEM	BOMBA PUMP POMPA
REC27-56880	27-56880	PH600-0006

MOTORES / ENGINES / MOTORI
Ford V8 (302, 351)

Ref.	R.O. OEM	BOMBA PUMP POMPA
REC27-33956	27-33956	PH600-0004

MOTORES / ENGINES / MOTORI
4 & 6 Cyl.

Ref.	R.O. OEM	BOMBA PUMP POMPA
REC27-34897	27-34897	PH600-0005

MOTORES / ENGINES / MOTORI
GM V6 & V8 Bloque pequeño / Small block / blocco piccolo

Ref.	R.O. OEM	BOMBA PUMP POMPA
REC27-49110	27-49110	PH600-0002

MOTORES / ENGINES / MOTORI
V-8 Bloque grande / big block / blocco grande
454-502 CHEVY

MOTORES DE ARRANQUE
STARTERS
MOTORINO D'AVVIAMENTO

Ref.	R.O. OEM	V	DIENTES TOOTH DENTI	KW	VOLANTE FLYWHEEL VOLANTE	SOLENOIDE SOLENOID SOLENOIDE
PH140-0017-D	50-863007A1	12	11	1.4	14"	**PH375-0008**

MOTORES / ENGINES / MOTORI
4 cyl V6 & V8
3.0L
Motor de arranque para substituir a todos los motores de tamaño pequeño con tornillos fijación en diagonal excepto los 7.4L
Starter to replace all the little engines with diagonally fixation screws exepting 7.4L.
Motorino d'avviamento per sostituire tutti i motori V 6 e V8 con motorini con viti di supporto trasversali eccetto i motori 7.4L

TORNILLO BOLT VITE	R.O. OEM
REC10-861788	10-861788

Ref.	R.O. OEM	V	DIENTES TOOTH DENTI	KW	VOLANTE FLYWHEEL VOLANTE	SOLENOIDE SOLENOID SOLENOIDE
PH140-0017-HT	50-864340A2	12	11	1.7	14"	**PH375-0005**

MOTORES / ENGINES / MOTORI
Motor de arranque Heavy Duty. Tornillos de fijación en diagonal. Para todos los motores V-6 y V-8, y especialmente los 7.4 L.
Starter with diagonally fixation screws. For all engines V6 & V8, specialy 7.4L.
Motorino d'avviamento Heavy Duty con viti di supporto trasversali. Per tutti i motori V-6 e V-8, consigliato per i 7.4L.

TORNILLO BOLT VITE	R.O. OEM
REC10-861788	10-861788

Ref.	R.O. OEM	V	DIENTES TOOTH DENTI	SOLENOIDE SOLENOID SOLENOIDE
PH140-0004	50-69865A1 50-12782 50-56886	12	10	**PH375-0009**

MOTORES / ENGINES / MOTORI
FORD 5.0 & 5.8L

Ref.	R.O. OEM	V	DIENTES TOOTH DENTI	VOLANTE FLYWHEEL VOLANTE	SOLENOIDE SOLENOID SOLENOIDE
PH140-0015	50-864340A2 50-99418A2	12	9	14 1/4"	**PH375-0004**

MOTORES / ENGINES / MOTORI
Motor de arranque para V6 y V8 con tornillos sujección en diagonal.
Starter to V6 & V8 heavy duty standard rotation. Offset mounting holes
Motorino d'avviamento per V6 e V8 con viti di supporto trasversali.

TORNILLO BOLT VITE	R.O. OEM
REC10-861788	10-861788

Ref.	R.O. OEM	V	DIENTES TOOTH DENTI	KW	VOLANTE FLYWHEEL VOLANTE	SOLENOIDE SOLENOID SOLENOIDE
PH140-0020	50-863007A1 50-806963A2 50-806965A4	12	9	1.4	12 3/4"	**PH375-0008**

MOTORES / ENGINES / MOTORI
V6 & V8
Motor de arranque pequeño 4 en línea.
Starter Clockwise for 4L.
Motorino d'avviamento
(viti di supporto trasversali).

TORNILLO BOLT VITE	R.O. OEM
MP0180-001	
REC10-861788	10-861788

Ref.	R.O. OEM	V	DIENTES TOOTH DENTI	KW	SOLENOIDE SOLENOID SOLENOIDE
PH140-0020-D	50-812429A2 50-806965A2 50-806965A4 50-8M0090697	12	11	1.4	**PH375-0008**

MOTORES / ENGINES / MOTORI
3.0L

NEW

TORNILLO BOLT VITE	R.O. OEM
MP0180-001	
REC10-861788	10-861788

Ref.	R.O. OEM	V	DIENTES TOOTH DENTI	SOLENOIDE SOLENOID SOLENOIDE
PH140-0013	50-806965A4 50-99417A2	12	9	PH375-0004

MOTORES / ENGINES / MOTORI
Modelo antiguo. Motor de arranque 4 en línea, V6 & V8 (Tornillos sujección misma altura).
Old style. Starter heavy duty standard rotation 4 inline, V6 & V8. In line mounting holes.
Modello vecchio. Motorino d'avviamento 4 in linea, V6 & V8 (Viti di supporto parallele)

TORNILLO BOLT VITE	R.O. OEM
MP0180-000	10-812509184
REC10-861788	10-861788

Ref.	R.O. OEM	V	DIENTES TOOTH DENTI
PH150-0008	50-805991	12	10

MOTORES / ENGINES / MOTORI
7.3L BRAVO & MIE
DIESEL NAV444 V8 (1994-96)
6.9L

NEW

Ref.	R.O. OEM	V	DIENTES TOOTH DENTI	KW
PH140-0022	50-72550A2 50-47454 50-65785A1 50-79604A3	12	9	1.4

MOTORES / ENGINES / MOTORI
4, 6 & 8 cyl
Motor de arranque 4 en línea modelo 470.
Starter clockwise 4 in line 470 mod. and engines with transmission.
Motorino d'avviamento 4 in linea modello 470.

Ref.	R.O. OEM	V	DIENTES TOOTH DENTI	KW
PH140-0022-CCW	50-808011A05 50-88671A1 50-80811A4	12	9	1.4

MOTORES / ENGINES / MOTORI
4, 6 & 8 cyl
5.7 MIE / 6.2 MIE.
Contrarrotación o montaje en campana.
Starter counter clockwise.
Controrotante, posizionato nella campana.

EXTENSOR DE SOLENOIDE PARA TERMINALES
SOLENOID EXTENSOR FOR TERMINALS
PROLUNGA TERMINALE PER SOLENOIDE

Ref.	R.O. OEM
PH365-0006	

NEW

ALTERNADORES, REGULADORES Y TRIM
ALTERNATORS, VOLTAGE REGULATORS & TRIM
ALTERNATORI, REGOLATORI E TRIM

ALTERNADOR
ALTERNATOR
ALTERNATORI

Ref.	R.O. OEM	V
PH300-0013	78403A2 59755 69729 56045	12V 61A

Regulador autoexcitante
Polea simple
1cable
Self-exciting regulator
Single pulley
1 wire
Regolatore
Singola puleggia
1 cavo

Ref.	R.O. OEM	V
PH300-0022	817119A4 78402 78403A1 78403A2 92497A3	12V 63A

Regulador autoexcitante
Polea simple
2 cable
Self-exciting regulator
Single pulley
2 wire
Regolatore
Singola puleggia
2 cavo

Ref.	R.O. OEM	V
PH300-0034	862031T1 862031 862031T	12V 70A

MOTORES / ENGINES / MOTORI
4.3 & 5.7L (1997+)

Regulador interno
Polea serpentín 6 canales 65 mm
Internal regulator
6 groove pulley 65 mm
Regolatore interno
Puleggia a serpentina a 6 canali. 65 mm

Ref.	R.O. OEM	V
PH300-0010	817119A4 98555 12449 19685 817119 817119A1	12V 55A

MOTORES / ENGINES / MOTORI
4.3 & 5.7L (1998+)

Regulador interno
Polea simple
Internal regulator
Single pulley
Regolatore interno
Puleggia singola

Ref.	R.O. OEM	V
PH300-0016	805884T 805884 805447T	12V 65A

MOTORES / ENGINES / MOTORI
Para gasolina inyección y diesel.
Regulador interno
Polea simple
For EFI & diesel engines.
Internal regulator
Single pulley
Per motori benzina iniezione e diesel.
Regolatore interno
Puleggia singola

Ref.	R.O. OEM	V
PH300-0033	862030T01 862030T	12V 70A

MOTORES / ENGINES / MOTORI
3.0L (1999+)

Regulador interno
Polea simple
Internal regulator
Single pulley
Regolatore interno
Puleggia singola

Ref.	R.O. OEM	V
PH300-0012	807653T 807653	12V 65A

Regulador interno
Polea serpentín 6 canales
Internal regulator
6 groove pulley
Regolatore interno
Puleggia a serpentina a 6 canali.

Ref.	R.O. OEM	V
PH300-0011	807652T 807652	12V 55A

Regulador interno
Polea serpentín 6 canales
Internal regulator
6 groove pulley
Regolatore interno
Puleggia a serpentina a 6 canali.

Ref.	R.O. OEM	V
PH300-0035	863077T 86307AR01	12V 70A

MOTORES / ENGINES / MOTORI
4.3L, 6.2L & 5.7L (1995+)

Regulador interno
Polea serpentín 6 canales 50 mm
Internal regulator
6 groove pulley 50 mm
Regolatore interno
Puleggia a serpentinaa 6 canali. 50 mm

Ref.	R.O. OEM	V
REC882571	882571 8M0084523	12V 50A

MOTORES / ENGINES / MOTORI
MCM 1.7L DTI.
CMD 1.7 MI 120 L/L4
CMD 1.7 MS 120L/L4

6 Polea serpentin 50 mm
6 groove pulley 50 mm
Puleggia a serpentina a 6 canali. 50 mm

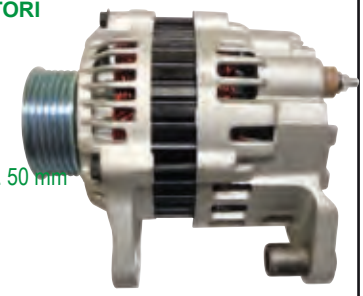

Ref.	R.O. OEM	V
PH300-0030	834832 834832T2 857006A3	12V 50A

MOTORES / ENGINES / MOTORI
RACE STERNDRIVE 500EFI, 575 SCI

Regulador interno
Polea serpentín 4 canales
Internal regulator
4 groove pulley
Regolatore interno.
Puleggia a serpentina a 4 canali

NEW

KIT SUSTITUCIÓN ALTERNADOR
ALTERNATOR CONVERSION KIT
KIT SOSTITUZIONE ALTERNATORE

Ref.	R.O. OEM	V
REC18-5953	42785	12V 68A

MOTORES / ENGINES / MOTORI
470 (3.7L)
224 (3.7L)

REGULADOR ALTERNADOR
VOLTAGE REGULATOR
REGOLATORE ALTERNATORE

Ref.	R.O. OEM
REC42785	42785

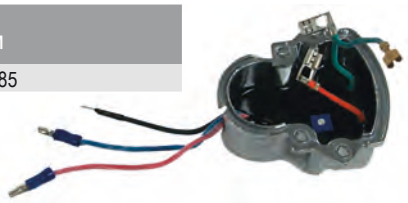

MOTORES TRIM
TRIM ENGINES
MOTORI TRIM

Ref.	R.O. OEM
PH200-T016-SK	414336A6 14336A9 88183A12

NEW

Motor Trim completo con soporte inox. Incluye motor, solenoides, fusible y cableado.
Complete bracket assembly with Tilt/Trim motor, solenoids, fuse block and wiring. Stainless steel bracket.
Motore trim completo di supporto in acciaio inox. Include il motore, solenoide, fusibile e cablaggio.
(1983+) Quick connect

Ref.	R.O. OEM	V
PH200-T016	865380A13 865380A25 88183A12 14336A8 14336A20	12V

Motor Trim completo con depósito.
Oildyne Complete for late -MCM.
Motore trim completo con serbatoio.

Ref.	R.O. OEM	V
PH200-T015	891736T 17649 17649T	12V

3 cables de conexión.
Para Alpha I, Gen II y Bravo.
3 wire connection
For late style Alphal, II gen & Bravo drives.
3 cavi di conessione
Per Alpha I, Gen II e Bravo.

CONVERTIDOR DE 3 A 2 CABLES
3 TO 2 WIRE WIRED CONVERTER
CONVERTITORE CAVI DA 3 A 2 FILI

Ref.
PH200-WH01

Ref.	R.O. OEM
PH200-T066-K	865380A13

NEW

Soporte motor Trim fabricado en acero inox. Incluye solenoides, fusible y cableado.
Bracket assembly with solenoids, fuse block and wiring. Stainless steel bracket.
Supporto motorino Trim in acciaio inox. Include i solenoidi, fusibile e cablaggio.

Ref.	R.O. OEM
PH200-T066	862548A1 42419A1

Bracket motor Trim.
Fabricado en acero inox.
Supporto motorino trim in acciaio inox

Ref.	R.O. OEM
PH200-T064-1B	18525A1

Depósito Trim 1 tornillo.
One Bolt Reservoir.
Vaschetta Trim 1 vite.

Ref.	R.O. OEM
REC883166A2	883166A2

Depósito Trim 4 tornillos.
Four bolt Reservoir.
Vaschetta Trim 4 viti.

ACEITE TRIM / TILT
POWER TRIM & TILT FLUID
OLIO TRIM / TILT
LUB11578U12

PAG 13

SOLENOIDES Y FUSIBLES
SOLENOID & FUSES
SOLENOIDI E FUSIBILE

SOLENOIDES
SOLENOID
SOLENOIDI

Ref.	R.O. OEM	V
PH375-0036	89-818999A2 89-818999A1 89-805188A1	12

SOLENOIDES TRIM
TRIM SOLENOID
SOLENOIDI TRIM

Ref.	R.O. OEM	V
PHSEL-239	89-96158T 89-96158	12
PH375-0028	89-853654A1 89-68258A4	12
PH375-0034	89-818997T1 89-818997A1	12

PHSEL-239

PH375-0028

PH375-0034

SOLENOIDES ARRANQUE
STARTER SOLENOID
SOLENOIDI AVVIAMENTO

Ref.	R.O. OEM	V
REC89-96054T	89-96054T 89-96054 89-91975	12
REC89-818864T	89-818864T 89-818864	12
PH375-0027	87-76416A1	12
PH375-0011	25661T1 25661	12
PH375-0031	65057T1 65057A1	12

REC89-96054T

REC89-818864T

PH375-0027

PH375-0011

PH375-0031

SOLENOIDES DELCO REMY
DELCO REMY SOLENOID
SOLENOIDE DELCO REMY

Ref.	R.O. OEM	V	
PH375-0001	13037 8733261	12	9.5 cm
PH375-0004	89-853654A1 89-18080 89-99253	12	7.5 cm
PH375-0008	809463A1	12	

PH375-0001
PH375-0004

PH375-0008

RELÉ ARRANQUE Y BOMBA GASOLINA
RELAY FOR IGNITION & FUEL PUMP
RELÉ DI AVVIAMENTO, E POMPA BENZINA

Ref.	R.O. OEM
REC86-865202T	86-865202T

RELÉ PARA ACELERADOR Y EJE
RELAY FOR THROTTLE AND SHIFT
RELÉ DI ACCELERATORE E ASSE

Ref.	R.O. OEM
REC882751A04	882751A04

MOTORES / ENGINES / MOTORI
496 MAG (BASE & H.O.)
8.1L INBOARD (BASE & H.O.)
8.1L TOWSPORT
Relay para cable mecánico
Relay for mechanical wire
Relé per cavo meccanico

NEW

Ref.	R.O. OEM
REC882751A1	882751A1 828151 828151A1 882751A2

NEW

MOTORES / ENGINES / MOTORI
8.2L INBOARD (BASE & H.O.) EC
8.2L MAG
Relay para cable digital y mecánico
Relay for digital & mechanical cable
Relé per cavo digitale e meccanico

RELÉ PARA ALARMA Y VARIOS
RELAY FOR ALARM & OTHERS
RELÉ PER ALARMA E ALTRI

Ref.	R.O. OEM
REC821509	821509 821509T01

MOTORES / ENGINES / MOTORI
CMD 2.8 EI, ES (165)
CMD 4.2 EI, ES, MI, MS (200, 230, 250, 300)
D2.8L/165 D-TRONIC
D3.0L, D3.6L, D4.2L/(200, 220, 250, 300)

NEW

FUSIBLE MOTOR
CIRCUIT BREAKER
FUSIBILE MOTORE

Ref.	R.O. OEM	V
BS2142	88-11178A01	50A
BS2143	88-93582	60A

FUSIBLE MOTOR TRIM
TRIM FUSE ASEMBLY
FUSIBILE MOTORINI TRIM

Ref.	R.O. OEM	V
PH365-0003	88-79023T10	110A
RM88-79023A91	88-79023A91	90A

FUSIBLE ATM
ATM FUSE
FUSIBILE ATM

Ref.	AMP	
AM603905	5 A	2
AM603910	10 A	2
AM603915	15 A	2
AM603920	20 A	2
AM603930	30 A	2

FUSIBLE ATC
ATC FUSE
FUSIBILE ATC

Ref.	AMP	
BS5291	3 A	2
BS5299	4 A	2
BS5292	5 A	2
BS5293	7,5 A	2
BS5294	10 A	2
BS5295	15 A	2
BS5296	20 A	2
BS5297	25 A	2
BS5298	30 A	2

FUSIBLE MAXI
MAXI FUSE
FUSIBILE MAXI

Ref.	AMP	
BS5138	30 A	2
BS5139	40 A	2
BS5140	50 A	2
BS5141	60 A	2
BS5142	70 A	2
BS5143	80 A	2

FILTROS MOTORES GASOLINA
FILTERS GAS ENGINE
FILTRI MOTORI BENZINA

GAS

FILTRO COMBUSTIBLE SEPARADOR DE AGUA
WATER SEPARATING FUEL FILTER
FILTRO SEPARATORE ACQUA-BENZINA

Ref.	R.O. OEM	MICRAS MICRON MICRON	ALTURA HEIGHT ALTEZZA
REC24942	35-802893Q01	10	4 7/16"
REC35-802893Q01	35-802893Q01	10	3 3/4"
REC855686	35-802893Q01	28	4 7/16"
REC35-802893Q	35-802893Q01	25	3 3/4"
RACPFF5510	35-802893Q01	10	4 7/16"

RECmar

REC24942

REC855686

REC35-802893Q01

REC35-802893Q

RACOR

RACPFF5510

Ref.	R.O. OEM
RM35-866594Q01	35-866594Q01 35-866594K01

NEW

MOTORES / ENGINES / MOTORI
3.0L MPI EC

No compatible con carburadores:
Not compatible with carburetors:
Non compatibile con carburatori:
100VAZER, 100VAZER EC

FILTRO ORIGINAL
OEM FILTER
FILTRO BENZINA ORIGINALE

Ref.	R.O. OEM	MICRAS MICRON MICRON	ALTURA HEIGHT ALTEZZA
RM35-802893Q	35-802893Q01	10	3 3/4"

FILTRO CON BRACKET
FILTER WITH BRACKET
FILTRO CON SUPPORTO

Ref.	R.O. OEM	MICRAS MICRON MICRON	TOMAS NTPF PORTS FILETTO	FLUJO FLOW FLUSSO
REC24950	35-60494A4	28	1/4"	50GPH
REC24952		10	1/4"	50GPH

Bracket de Aluminio. Con 2 tapones de bronce y 1 tubo de extensión.
Cast Aluminium Bracket. With 2 brass plugs & 1 extension tube.
Supporto in alluminio. Con 2 tappi di bronzo e 1 tubo di estensione.

Ref.	R.O. OEM
RAC320R-RAC-02	35-802893Q4
RACS3220UL	35-809101

Con Bracket Inox y cubeta metálica.
With Stainless Steel Bracket and metallic bowl.
Con Bracket e vaschetta metallica.

RAC320R-RAC-02

Recambio filtro.
Element.
Cartuccia filtro.

RACS3220UL

BRACKET
BRACKET
SUPPORTO

Ref.	R.O. OEM	BRACKET	TOMAS NTPF PORTS FILETTO
REC25000	89876A3	AL	1/4"
REC25010		INOX AISI316	1/4"
REC25020		AL	3/8"
REC25030		INOX AISI316	3/8"

Con 2 tapones de bronce y 2 tubos de extensión.
(2 entradas y 2 salidas).
With 2 brass plugs and 2 extension tubes.
(2 inputs & 2 outputs).
Con 2 tappi di bronzo e 2 tubi di estensione.
(2 ingressi entrata carburante e 2 uscite carburante).

REC25000 - REC25020

REC25010 - REC25030

RÁCORES
RACORS
RACCORDI

Ref.	ROSCA THREAD PASSO	MANGUERA HOSE TUBO	
GS31066	1/4" NPT	5/16" = 7,9 mm	2
GS31067	1/4" NPT	3/8" = 9,5 mm	2

Fabricado en latón.
Made in machined brass.
Prodotto in ottone

GOLDENSHIP

Ref.	ROSCA THREAD PASSO	MANGUERA HOSE TUBO	
GS31065	1/4" NPT	3/8" = 9,5 mm	2
GS31166	1/4" NPT	5/16" = 7,9 mm	2
GS31155	3/8" NPT	3/8" = 9,5 mm	2
GS31156	3/8" NPT	5/16" = 7,9 mm	2
GS31157	3/8" NPT	1/4" = 6,4 mm	2

Rácor 90º fabricado en latón.
Made in machined brass.
Raccordo 90º prodotto in ottone

GOLDENSHIP

FILTROS DECANTADORES
COMPLETE FUEL FILTERS
FILTRI DECANTATORE

RACOR

	RAC120R-RAC-01	RAC320R-RAC-01	RAC320R-INOX-01	RAC320R-RAC-02
FLUJO MÁXIMO MAX. FLOW FLUSSO MASSIMO	114 l/h 30 gph	340 l/h 60 gph	340 l/h 60 gph	340 l/h 60 gph
ELEMENTO / ELEMENT / ELEMENTO	**RACS3240**	**RACS3213**	**RACS3213**	**RACS3220UL**
CAZOLETA TRANSPARENTE (sólo se recomienda para fueraborda.) CLEAR BOWL (Just for outboards) VASCHETTA TRASPARENTE (Solo nei fuoribordo.)	✔	✔	✔	✘
ROSCAS CENTRALES CENTRAL THREADS FILETTO CENTRALE	M18 x 1.5	1 1/4"	1 1/4"	1 1/4"
TAMAÑO ROSCA CABEZA HEAD PORT SIZE DIMENSIONE VITE TESTA	1/4-18 NPTF	1/4-18 NPTF	1/4-18 NPTF	1/4-18 NPTF
ALTURA X ANCHO X PROF. HEIGHT X WIDTH X DEPTH ALTEZZA X LARGH X PROF.	16 x 81 x 81 mm	238 x 102 x 102 mm	238 x 102 x 102 mm	238 x 102 x 102 mm
PESO / WEIGHT / PESO	0,5 kg	0,9 kg	0,9 kg	0,9 kg
CAIDA DE PRESIÓN PRESSURE DROP CADUTA DI PRESSIONE	0.15 PSI 0.01 bar	0.61 PSI 0.04 bar	0.61 PSI 0.04 bar	0.61 PSI 0.04 bar
PRESIÓN MÁXIMA MAX. PRESSURE PRESSIONE MASSIMA	7 PSI 0.05 bar	7 PSI 0.05 bar	7 PSI 0.05 bar	7 PSI 0.05 bar
DESMONTAJE CARTUCHO-CAZOLETA ELEMENT REMOVAL UNDERBOWL RIMOZIONE DELLA CARTUCCIA	25,4 mm 1"	25,4 mm 1"	25,4 mm 1"	25,4 mm 1"
TEMPERATURA DE TRABAJO OPERATING TEMPERATURE TEMPERATURA DI LAVORO	-40ºC +124ºC -40ºF +255ºF			

ELEMENTOS DE RECAMBIO
ELEMENT
ELEMENTI DI RICAMBIO

Ref.	R.O. OEM	FILTRO FILTER FILTRO
RACS3240 LENS3240		RAC120R-RAC-01
RACS3227 LENS3227	35-886638	
RACS3213 LENS3213	35-809097	RAC320R-RAC-01 RAC320R-RAC-01 INOX
RACS3214	35-809099	
RACS3228UL		RAC320R-RAC-02, con/with/con bracket RACOR
RACS3220UL		RAC320R-RAC-02

LENS3240
LENS3227
LENS3214

RACS3240
RACS3227
RACS3214

RACS3228UL

FILTROS GASOLINA
FUEL FILTERS
FILTRI BENZINA

GAS

Ref.	R.O. OEM
REC864572	864572 35-864572

MOTORES / ENGINES / MOTORI
EFI & MPI, 8.1L & 496 CID
3/8" ID línea de combustible / fuel lines / 3/8 linea carburante
MPI & EFI con bomba boost / boost pump / pompa di sovralimentazione

Ref.	CAPACIDAD CAPACITY CAPACITÀ	MANGUERA HOSE TUBO
GS31001	50 l/h	6 - 8 mm
GS31102	150 l/h	8 - 10 mm

GS31001

GOLDENSHIP

GS31002

Ref.	R.O. OEM
RAC31871	35-884380T 35-8M0020349 35-8M0060041

NEW

MOTORES / ENGINES / MOTORI
MCM 4.5L (V6)

RACOR

Ref.	R.O. OEM	
REC35-8M0046752	35-8M0046752 35-11004A1 35-803897Q1	4 7/16"

MOTORES / ENGINES / MOTORI
2.5L/3.0L (6229718+)
MCM224 CID (6218037+)
GM262 CID (A331455+)
con carter de bomba de combustible
with carter fuel pump
con carter pompa combustibile

Ref.	R.O. OEM
REC1397-8767Q	1397-8767Q 1397-8767 1397-8545

MOTORES / ENGINES / MOTORI
GM 2.5L/3.0L (6229718+)
GM 5.0L/5.7L (6218462+)
205 (A331455+)
228 HP (6021784+)
330 HP (6083145+)
GM 255 (590768+)
5.7L SKI 340, 230 & 260 inboards

Ref.	R.O. OEM
REC35-866171A01	35-866171A01

MOTORES / ENGINES / MOTORI
5.0 - 350 - 6,2 & 8.1 MPI, MIE
496 MAG
con módulo de bomba combustible
with fuel pump module
con modulo pompa combustibile

CUBETA FILTRO GASOLINA
FUEL FILTER BOWL
VASCHETTA FILTRO BENZINA

Ref.	R.O. OEM
REC35-892665	35-892665

MOTORES / ENGINES / MOTORI
5.0 (350, 377, 383, 496)
6.2 & 8.1 MPI

FILTRO GASOLINA CARBURADOR
CARBURETOR FUEL FILTER
FILTRO BENZINA CARBURATORE

Ref.	R.O. OEM
REC35-53336	35-53336Q 35-53336 3302-9033

MOTORES / ENGINES / MOTORI
GM INLINE 4 & 6 cyl
FORD & GM V8 400 HP+
MERCRUISER 224 CID

Ref.	R.O. OEM	CARBURADOR CARBURETOR CARBURATORE
REC93568	35-93568	Rochester 2bbl & 4 bbl
REC35-49088A2	35-49088Q2 35-49088A2	4 &6 cyl inline
REC1397-2150	1397-2150	Rochester

REC93568

REC35-49088A2

REC1397-2150

FILTROS VST
VST FILTERS
FILTRI VST

GAS

Ref.	R.O. OEM
REC65L-13915-00	808504 8085041 808504T1

MOTORES / ENGINES / MOTORI
262 MAG (TBI) GEN+
350 MPI, TBI, EFI (1994-96)
454 EFI (GEN V) GM (1994-96)
454 EFI (SKI GEN V) GM (1995)
454 MAG BRAVO MPI (GEN VI) GM (1996-97)
5.7 EFI (TBI) GM 350 V8 (1995)
7.4L MIE MPI (LH) (GEN V) GM (1995-96)
7.4L MIE MPI (LH) (GEN VI) GM (1996-97)
7.4LX BRAVO MPI (GEN V) GM (1996)
7.4LX BRAVO MPI (GEN VI) GM (1996-97)
8.2L MIE MPI (LH) (GEN VI) GM (1996-97)

JUNTA SEPARADOR DE VAPOR
VAPOR SEPARATOR TANK O-RING
GUARNIZIONE SEPARATORE DI VAPORE

Ref.	R.O. OEM
REC808500	808500

MOTORES / ENGINES / MOTORI
V6 & V8

FILTROS AIRE
GAS ENGINE AIR FILTERS
FILTRI ARIA

Ref.	R.O. OEM
RM35-863829	35-863829

MOTORES / ENGINES / MOTORI

350 MAG 4.3L MPI
383 MAG 5.0L MPI
496 MAG 6.2L MPI
357 HRZ

Ref.	R.O. OEM
RM35-8M2001030	35-8M2001030

MOTORES / ENGINES / MOTORI

350 MAG MPI 5.0L MPI
377 MAG MPI 5.7L MPI
4.3L MPI 6.2L MPI

FILTROS ACEITE
GAS ENGINE OIL FILTERS
FILTRI OLIO

Ref.	R.O. OEM	MOTORES ENGINES MOTORI	ROSCA THREAD FILETTO
RM35-883702Q	35-883702Q	V6 GM MCM V-6 *	18 mm x 1.5
RM35-866340Q02	35-866340Q03	GM 4 inline, V8 MCM / MIE GM V-6 *	13/16" x 16 NPT

* sin filtro de aceite remoto
* without oil remote filter
* senza filtro dell'olio remoto

Ref.	R.O. OEM	MOTORES ENGINES MOTORI	ROSCA THREAD FILETTO
REC35-06004	35-883702Q	GM V6	18 mm x 1.5
REC35-06003	35-866340Q03	GM 4 inline V8	13/16" x 16 NPT
REC35-06007	35-802886Q, 60565	V8 Ford	3/4" x 16 NPT

FILTROS MOTORES DIESEL
FILTERS DIESEL ENGINE
FILTRI MOTORI DIESEL

FILTROS GASOIL
DIESEL FILTERS
FILTRI DIESEL

Ref.	R.O. OEM
REC882376	882376

MOTORES / ENGINES / MOTORI

1.7DTI Original

Ref.	R.O. OEM
REC35-19486	35-19486

MOTORES / ENGINES / MOTORI

D254
D3.0L
D3.6L
D4.2L

Ref.	R.O. OEM
REC35-808275	35-808275

MOTORES / ENGINES / MOTORI

D7.3/270 Bravo
& MIE Diesel (1994-96)

Ref.	R.O. OEM
REC35-807256	35-807256T

MOTORES / ENGINES / MOTORI

D3.0L
D3.6L
D7.3L D-Tronic
CMD 2.8
CMD 4.2
D2.8L

Ref.	R.O. OEM
REC35-879172104	35-879172104

MOTORES / ENGINES / MOTORI

(MQSD MODELS)
2.0L
2.8L
4.2L
base VM

FILTROS CON CAZOLETA Y ELEMENTOS
BOWL FILTERS & ELEMENTS
FILTRI CON VASCHETTA E ELEMENTI

DIESEL

RACOR

	RAC500MA30	RAC900MA30	RAC1000MA30	RAC75/500MAX	RAC75/1000MA30
FLUJO MÁXIMO MAX. FLOW FLUSSO MASSIMO	227 l/h 60 gph	341 l/h 90 gph	681 l/h 180 gph	454 l/h 120 gph	681 / 1363 l/h 180 / 360 gph
ELEMENTO ELEMENT ELEMENTO	**2010**	**2040**	**2020**	**2010**	**2020**
ALTURA X ANCHO X PROF. HEIGHT X WIDTH X DEPTH ALTEZZA X LARGH X PROF.	292 x 147 x 122 mm	432 x 152 x 178 mm	559 x 152 x 178 mm	292 x 368 x 241 mm	559 x 476 x 279 mm
TAMAÑO ROSCA CABEZA HEAD PORT SIZE DIMENSIONE VITE TESTA	1/4-18 NPTF	1/4-18 NPTF	1/4-18 NPTF	1/4-18 NPTF	
PESO WEIGHT PESO	2 kg	3 kg	5 kg	7,7 kg	13,6 kg
CAIDA DE PRESIÓN PRESSURE DROP CADUTA DI PRESSIONE	0.61 PSI 0.04 bar	0.34 PSI 0.02 bar	0.49 PSI 0.03 bar	0.70 PSI 0.05 bar	3.70 PSI 0.25 bar
PRESIÓN MÁXIMA MAX. PRESSURE PRESSIONE MASSIMA	15 PSI 1 bar	15 PSI 1 bar	15 PSI 1 bar	15 PSI 1 bar	15 PSI 1 bar
ALTURA CLEARN. ALTEZZA	102 mm	127 mm	254 mm	102 mm	254 mm

ELEMENTOS DE RECAMBIO
ELEMENT
ELEMENTI DI RICAMBIO

REF 500	REF 900	REF 1000	MICRAS MICROM MICRON
RAC2010SM-OR	RAC2040SM-OR	RAC2020SM-OR	2
RAC2010TM-OR	RAC2040TM-OR	RAC2020TM-OR	10
RAC2010PM-OR	RAC2040PM-OR	RAC2020PM-OR	30

S: secundario
T: primario o secundario/final
P: primario

S: secondary final
T: primary or secondary final
P: primary

S: secondario
T: primario o secondario
P: primario

RACOR

FILTROS DECANTADOR
COMPLETE DIESEL FILTER
FILTRI DECANTATORE

RACOR

	RAC110A	RAC120AS	RAC230R2	RAC245R2	RAC460R2	RAC490R2
FLUJO MÁXIMO MAX. FLOW FLUSSO MASSIMO	57 l/h 15 gph	57 l/h 15 gph	114 l/h 30 gph	170 l/h 45 gph	227 l/h 60 gph	341 l/h 90 gph
ELEMENTO ELEMENT ELEMENTO	RACR11T	RACR12	RACR20	RACR25	RACR60	RACR90
DIESEL	✔	✔	✔	✔	✔	✔
GASOLINA GAS BENZINA	✔	✔				
CAZOLETA TRANSPARENTE CLEAR BOWL VASCHETTA TRASPARENTE	✘	✔	✔	✔	✔	✔
INSTALACIÓN VACUÓMETRO VACUUM INSTALLATION INSTALLAZIONE VACUOMETRO	✔	✔	✔	✔	✔	✔
INSTALACIÓN PRESIÓN PRESSURE INSTALLATION INSTALLAZIONE PRESSIONE	✔	✔	✔	✔	✔	✔
ALTURA X ANCHO X PROF. (mm) HEIGHT X WIDTH X DEPTH (mm) ALTEZZA X LARGH X PROF. (mm)	152 x 81 x 81	165 x 81 x 81	229 x 102 x 102	267 x 102 x 102	279 x 114 x 121	300 x 114 x 121
PESO WEIGHT PESO	0,59 kg	0,59 kg	0,90 kg	1 kg	1,3 kg	1,4 kg
CAIDA DE PRESIÓN PRESSURE DROP CADUTA DI PRESSIONE	0.15 PSI 0.01 bar	0.15 PSI 0.01 bar	0.31 PSI 0.02 bar	0.61 PSI 0.04 bar	0.39 PSI 0.03 bar	0.95 PSI 0.06 bar
PRESIÓN MÁXIMA MAX. PRESSURE PRESSIONE MASSIMA	100 PSI	7 PSI	30 PSI	30 PSI	30 PSI	30 PSI
TAMAÑO ENTRADA INLET SIZE DIMENSIONI ENTRATA	1/4" NPT	1/4" NPT	1/4" NPT	1/4" NPT	3/8" NPT	3/8'' NPT
BOMBA CEBADO (SÓLO PARA DIESEL) PRIMER PUMP (ONLY DIESEL) POMPA (SOLO PER DIESEL)	✘	✘	✔	✔	✔	✔
Nº TOMAS NUM. OF PORTS N° FORI	4	4	3	3	4	4
TIPO DRENAJE DRAIN TYPE TIPO DRENAGGIO	Sello positivo Positive seal Tenuta positiva	Sello positivo Positive seal Tenuta positiva	Sello positivo Positive seal Tenuta positiva	Sello positivo Positive seal Tenuta positiva	Sello positivo Positive seal Tenuta positiva	Sello positivo Positive seal Tenuta positiva
OPCIÓN SENSOR AGUA WATER SENSOR OPTION OPZIONE SENSORE ACQUA	✘	✔	✔	✔	✔	✔

ELEMENTOS DE RECAMBIO
ELEMENT
ELEMENTI DI RICAMBIO

REF.	MICRAS MICROM MICROM
RACR11T	10

REF.	MICRAS MICROM MICROM
RACR12S	2
RACR12T	10
RACR12P	30

REF.	MICRAS MICROM MICROM
RACR20S	2
RACR20T	10
RACR20P	30

REF.	MICRAS MICROM MICROM
RACR24S	2
RACR24T	10
RACR24P	30

REF.	MICRAS MICROM MICROM
RACR25S	2
RACR25T	10
RACR25P	30

REF.	MICRAS MICROM MICROM
RACR26S	2
RACR26T	10
RACR26P	30

REF.	MICRAS MICROM MICROM
RACR60S	2
RACR60T	10
RACR60P	30

REF.	MICRAS MICROM MICROM
RACR90S	2
RACR90T	10
RACR90P	30

S: secundario
T: primario o secundario/final
P: primario

S: secondary final
T: primary or secondary final
P: primary

S: secondario
T: primario o secondario
P: primario

FILTRO COMPLETO COMPLET FILTER FILTRO COMPLETO	CARTUCHO RECAMBIO REPLACEMENT ELEMENT CARTICCIA DI RICAMBIO	MICRAS MICROM MICROM
RAC245R2	RACR25S	2
	RACR25T	10

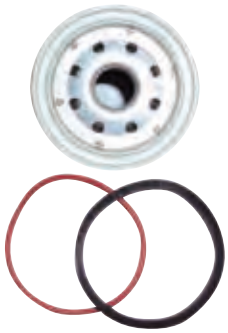

Filtro decantador Racor con bracket
Water separating diesel filter with bracket
Filtro decantatore Racor completo

FILTRO COMPLETO COMPLET FILTER FILTRO COMPLETO	CARTUCHO RECAMBIO REPLACEMENT ELEMENT CARTICCIA DI RICAMBIO	FLUJO FLOW FLUSSO
REC1140639	REC3581078	50 l/h

RECmar®

FILTRO FILTER FILTRO	CARTUCHO RECAMBIO REPLACEMENT ELEMENT CARTICCIA DI RICAMBIO	FLUJO FLOW FLUSSO
REC120	RACR12	15 gph

NEW

RECmar®

GAS D DIESEL

FILTROS TIPO SEPAR 2000
FILTER TYPE SEPAR 2000
FILTRI DI TIPO SEPAR 2000

D DIESEL

Ref.	MICRAS MICROM MICROM	FLUJO FLOW FLUSSO	MEDIDAS MEASURE MISURE	PARA FOR PER
RECGS00530	10	300 l/h	75 x 75 x 24 $3^{1/16}$ x $3^{1/8}$ x $1^{3/16}$	SWK-2000/5/50
RECGS01030	30	600 l/h	88 x 88 x 55 $3^{9/16}$ x $3^{5/8}$ x $2^{1/8}$	SWK-2000/10
RECGS01830	30	1080 l/h	136 x 138 x 55 $5^{13/16}$ x $5^{7/8}$ x $2^{1/8}$	SWK-2000/18/130 (4 units)

NEW

RECGS00530

RECmar®

RECGS01830

RECGS01030

FILTRO TRANSMISION HURTH
FILTER HURTH TRANSMISSION
FILTRO TRASMISSIONE HURTH

RECmar®

Ref.	R.O. OEM
REC016940	879194241 35-815419

MOTORES / ENGINES / MOTORI
Mercruiser V8 Hurth Transmision
8.1L & 8.2L Inboard
ZEUS 3000

FILTROS ACEITE
GAS ENGINE OIL FILTERS
FILTRI OLIO

D DIESEL

NEW

Ref.	R.O. OEM	ROSCA THREAD FILETTO
REC3517857	35-803470 35-80470Q	3/4" x 16 NPT

MOTORES / ENGINES / MOTORI
60 & 80 HP (RENAULT)
Filtro corto / Short filter / filtro corto

NEW

Ref.	R.O. OEM	ROSCA THREAD FILETTO
REC3850559	35-16595T1 35-16595Q 35-52731	13/16" x 16 NPT

MOTORES / ENGINES / MOTORI
GM
Filtro largo / Long filter / Filtro lungo

230 CID	370
250 CID	400
198 GM	420
228 GM	440
150 GM	460
330	898
350	

NEW

Ref.	R.O. OEM
REC127695-35150	35-19485

MOTORES / ENGINES / MOTORI
530D
636D
D2.8L
D3.0L
D3.6L
D4.2L
Motores VM engines

Ref.	R.O. OEM
REC35-805809	35-805809 35-805809T

MOTORES / ENGINES / MOTORI

D7.3L

RECmar

Ref.	R.O. OEM
REC35-816168	35-816168

MOTORES / ENGINES / MOTORI

D254
D3.0L
D3.6L
D4.2L

RECmar

Ref.	R.O. OEM
REC882687	882687

MOTORES / ENGINES / MOTORI

1.7DTS

Ref.	R.O. OEM
REC895207	895207

MOTORES / ENGINES / MOTORI

CUMMINS 2,8L
CMD, QSD
2.0 / 2.8 / 4.2

FILTROS AIRE
GAS ENGINE AIR FILTERS
FILTRI ARIA

Ref.	R.O. OEM
REC35-19487	35-19487

MOTORES / ENGINES / MOTORI

530D D219
636D D254
D183 D7.3L

Ref.	R.O. OEM
REC35-805312	35-805312

MOTORES / ENGINES / MOTORI

D2.8L D4.2L
D254 CMD MODELS

RÁCORES PARA FILTROS
RACORS FOR FILTER
RACCORDI PER FILTRO

RECTOS
STRAIGHT
DRITTO

Ref.	MANGUERA TUBE TUBO	
GS30430	8 mm	2
GS30431	10 mm	2

GOLDENSHIP

ORIENTABLES
GUIDEBLE
REGOLABILE

Ref.	MANGUERA TUBE TUBO	
GS30432	8 mm	2
GS30433	10 mm	2

Para el filtro: REC1140639.
For REC1140639 filter.
Per filtri REC1140639

GOLDENSHIP

Ref.	ROSCA THREAD FILETTO	MANGUERA TUBE TUBO	PARA FILTROS FOR FILTERS PER FILTRI
RAC913-O10-H10	7/8" - 14	5/8" = 16 mm	900 & 1000MA30
RAC913-O10-H8	7/8" - 14	1/2" = 13 mm	900 & 1000MA30
RAC913-O8-H6	3/4" - 16	3/8" = 10 mm	500MA30
RAC913-O8-H8	3/4" - 16	1/2" = 13 mm	500MA30

RACOR

Fabricado en latón.
Para filtros RACOR.
Made in machined brass.
For RACOR filters.
In ottone. Per filtri RACOR

Ref.	ROSCA THREAD FILETTO	MANGUERA TUBE TUBO
BRA125-3/16x1/4	1/4"	3/16"
BRA125-1/4x1/2	1/2"	1/4"
BRA125-5/16x3/8	3/8"	5/16"
BRA125-3/8x3/8	3/8"	3/8"
BRA125-3/8x1/2	1/2"	3/8"
BRA125-1/2x3/8	3/8"	1/2"
BRA125-1/2x1/2	1/2"	1/2"
BRA125-1/2x3/4	3/4"	1/2"
BRA125-5/8x3/8	3/8"	5/8"
BRA125-5/8x1/2	1/2"	5/8"
BRA125-5/8x3/4	3/4"	5/8"
BRA125-3/4x1/2	1/2"	3/4"
BRA125-3/4x3/4	3/4"	3/4"
BRA125-1x3/4	3/4"	1"

Ref.	ROSCA THREAD FILETTO	MANGUERA TUBE TUBO	
GS31166	1/4"	5/16" = 7,9 mm	2
GS31155	3/8"	3/8" = 95 mm	2
GS31156	3/8"	5/16" = 7,9 mm	2

GOLDENSHIP

Ref.	ROSCA THREAD FILETTO	MANGUERA TUBE TUBO
RAC1/2x16	1/2"	16 mm
RAC1/2X18	1/2"	18 mm
RAC1/2X20	1/2"	20 mm
RAC3/8X10	3/8"	10 mm
RAC3/8X12	3/8"	12 mm
RAC3/8X14	3/8"	14 mm

Fabricado en latón. Para filtros RACOR 500, 900, 1000.
Made in machined brass. For RACOR filters 500, 900, 1000.
In ottone. Per filtri RACOR 500, 900, 1000.

RECmar®

Ref.	ROSCA EXT THREAD EXT FILETTO EST	ROSCA INT THREAD INT FILETTO INT	PARA FILTROS FOR FILTERS PER FILTRI
RAC1/2F-1/2M	7/8"	1/2"	900 & 1000
RAC3/8F-3/8M	3/4"	3/8"	500

Fabricado en latón.
Made in machined brass.
In ottone.

RECmar®

ACCESORIOS PARA FILTROS
FILTERS ACCESSORIES
ACCESSORI PER FILTRI

EXTRACTOR DE FILTROS
OIL FILTER WRENCH
ESTRATTORE DI FILTRI

RECmar®

Ref.	PARA FILTROS FOR FILTERS PER FILTRI
REC70720	65 - 110 mm

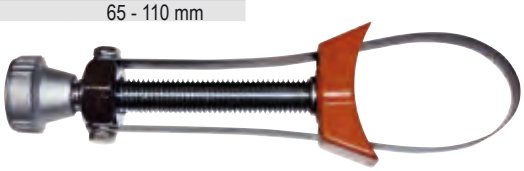

VALVULA DRENAJE AGUA DE FILTROS RACOR
DRAIN VALVE FOR RACOR FILTERS
VALVOLA DRENAGGIO ACQUA PER FILTRI RACOR

Ref.
RACRK19492UL

MANÓMETRO
VACUMM GAUGE
MANOMETRO

Ref.
RAC1606B

RACOR

RELOJ SENSOR DE AGUA
WATER ALARM
ALLARME SENSORE ACQUA

Ref.
RACRK20726

RACOR

SENSOR DE AGUA
WATER SENSOR
SENSORE ACQUA

DIESEL

RECmar®

Ref.
RECRK21069

Sólo para filtros Diesel.
No utilizar con gasolina.
Only for diesel applications.
Do not use with gasoline.
Solo per filtri Diesel.
NON benzina

UNIDADES DE TRANSMISIÓN
TRANSMISSION UNITS
UNITÀ DI TRASMISSIONE

RECmar®

BRAVO I

PARTE INFERIOR COMPLETA
COMPLETE GEAR HOUSING ASSEMBLY
PARTE INFERIORE COMPLETA

Ref.	R.O. OEM	ENTRADAS DE AGUA WATER INTAKE PRESA D'ACQUA
REC1656-8866A55	1656-8866A55 1656-8866A10	1
REC1656-8866A63	1656-8866A63 1656-8866A15	2

R / MR / ALPHA ONE

COLA COMPLETA
COMPLETE DRIVE SHAFT
PIEDE COMPLETO

R.O. COLA COMPLETA STD COMPLETE DRIVE SHAFT OEM STD R.O. PIEDE COMPLETO STD	REDUCCIÓN RATIO RIDUZIONE	MOTOR ENGINE MOTORE	PARTE SUPERIOR UPPER HOUSING PARTE SUPERIORE	PARTE INFERIOR STD LOWER HOUSING STD PARTE INFERIORE STD (13/21 THEETH 1972-92)
5-5010147CP	1.47, 1.50 (20/22)	V8 (-300HP)	**REC1547-9412A20**	**REC1623-8951A43**
5-5010162CP	1.62, 1.65 (24/24)	6 Cyl en línea / in-line / in rete	**REC1547-9412A21**	
5-5010181CP	1.81, 1.84 (17/19)	V6 & 470/485	**REC1547-9412A22**	
5-5010194CP	1.94, 1.98 (20/24)	4 Cyl en línea / in-line / in rete	**REC1547-9412A23**	

R.O. COLA COMPLETA C.R. COMPLETE DRIVE SHAFT OEM C.R. R.O. PIEDE COMPLETO C.R.	REDUCCIÓN RATIO RIDUZIONE	MOTOR ENGINE MOTORE	PARTE SUPERIOR UPPER HOUSING PARTE SUPERIORE	PARTE INFERIOR C.R. LOWER HOUSING C.R. PARTE INFERIORE C.R.
5-5000147CP	1.47, 1.50 (20/22)	V8 (-300HP)	**REC1547-9412A20**	**REC1623-8951A33**
5-5000162CP	1.62, 1.65 (24/24)	6 Cyl en línea / in-line / in rete	**REC1547-9412A21**	
5-5000181CP	1.81, 1.84 (17/19)	V6 & 470/485	**REC1547-9412A22**	
5-5000194CP	1.94, 1.98 (20/24)	4 Cyl en línea / in-line / in rete	**REC1547-9412A23**	

Se suministra en dos piezas sin tornillos de unión ni ánodos.
Para una instalación completa pida las siguientes referencias:
Supplied in 2 pieces without union screws nor anodes.
For a complete installation ask for the following references:
Fornito in due pezzi senza viti di unione e senza anodi.
Per un'installazione completa richiedere i seguenti riferimenti:

Ref.	Descripción	Description	Descrizione	CANTIDAD QUANTITY QUANTITÀ
REC10-30206	TORNILLO	SCREW	VITE	**1**
REC11-34933	TUERCA	NUT	DADO	**5**
CMALPHAGEN1KITA	KIT ANODOS	ANODES KIT	KIT ANODI	**1**

PARTE SUPERIOR COMPLETA
COMPLETE DRIVE SHAFT HOUSING
PARTE SUPERIORE COMPLETA

Ref.	R.O. OEM	REDUCCIÓN RATIO RIDUZIONE	MOTOR ENGINE MOTORE
REC1547-9412A20	1547-9412A20	1.50, 1.47 (20/22)	V8 (-300 HP) 9-9/16" new style input yoke
REC1547-9412A21	1547-9412A21	1.65, 1.62 (24/24)	6 Cyl en línea / inline / in linea 9-9/16" new style input yoke
REC1547-9412A22	1547-9412A22	1.84, 1.81 (17/19)	V6 & 470/485 9-9/16" new style input yoke
REC1547-9412A23	1547-9412A23	1.98, 1.94 (20/24)	4 Cyl en línea / inline / in linea 9-9/16" new style input yoke

MC1 / R / MR / ALPHA ONE

PARTE INFERIOR COMPLETA. ROTACIÓN ESTÁNDAR
COMPLETE GEAR HOUSING ASSEMBLY. STANDARD ROTATION
PARTE INFERIORE COMPLETA. ROTAZIONE STANDAR

Ref.	R.O. OEM	Nº SERIE SERIAL No No. SERIE
REC1623-8951A43	1623-8951A43	6225577+

MOTORES / ENGINES / MOTORI
(1972-92)
13 estrías Eje. Dientes 13/21
13 spline Drive shaft. Tooth count 13/21
Asse a 13 scalanature. Ingranaggi 13/21 denti

PARTE INFERIOR COMPLETA. CONTRARROTACIÓN
COMPLETE GEAR HOUSING ASSEMBLY. OPPOSITE ROTATION
PARTE INFERIORE COMPLETA. CONTROROTANTE

Ref.	R.O. OEM	Nº SERIE SERIAL No No. SERIE
REC1623-8951A33	1623-8951A33	6225577+

CARCASA PARTE INFERIOR (Sin componentes)
GEAR HOUSING (Without components)
CARCASSA PARTE INFERIORE (Senza componenti)

Ref.	R.O. OEM	Nº SERIE SERIAL No No. SERIE
REC1623-5356A4	1623-5356A4	1 & R
REC1623-8951A37	1623-8951A37	Alpha One & MR

ALPHA ONE GEN II

COLA COMPLETA
COMPLETE DRIVE SHAFT
PIEDE COMPLETO

R.O. COLA COMPLETA STD COMPLETE DRIVE SHAFT OEM STD R.O. PIEDE COMPLETO STD	REDUCCIÓN RATIO RIDUZIONE	MOTOR ENGINE MOTORE	PARTE SUPERIOR UPPER HOUSING PARTE SUPERIORE	PARTE INFERIOR STD LOWER HOUSING STD PARTE INFERIORE STD
5-5121200TP	1.47 (20/22)	5.0L EFI 5.7 / 350 MAG (MPI) -300HP	**REC1547-861063A12**	**REC1623-815822A53**
5-5121300TP	1.62 (24/24)	4.3 LH / 4.3L EFI / 5.0L (MPI)	**REC1547-861063A10**	
5-5121400TP	1.81 (17/19)	4.3L/ 4.3LX (MPI)	**REC1547-861063A8**	
5-5121500TP	1.94 (20/24)	3.0L / 3.0LX (MPI)	**REC1547-861063A6**	

R.O. COLA COMPLETA C.R. COMPLETE DRIVE SHAFT OEM C.R. R.O. PIEDE COMPLETO C.R.	REDUCCIÓN RATIO RIDUZIONE	MOTOR ENGINE MOTORE	PARTE SUPERIOR UPPER HOUSING PARTE SUPERIORE	PARTE INFERIOR C.R. LOWER HOUSING C.R. PARTE INFERIORE C.R.
5-5111200TP	1.47 (20/22)	5.0L EFI 5.7 / 350 MAG (MPI) -300HP	**REC1547-861063A12**	**REC1623-815822A47**
5-5111300TP	1.62 (24/24)	4.3 LH / 4.3L EFI / 5.0L (MPI)	**REC1547-861063A10**	
5-5111400TP	1.81 (17/19)	4.3L/ 4.3LX (MPI)	**REC1547-861063A8**	
5-5111500TP	1.94 (20/24)	3.0L / 3.0LX (MPI)	**REC1547-861063A6**	

Se suministra en dos piezas sin tornillos de unión ni ánodos.
Para una instalación completa pida las siguientes referencias:
Supplied in 2 pieces without union screws nor anodes.
For a complete installation ask for the following references:
Fornito in due pezzi senza viti di unione e senza anodi.
Per un'installazione completa richiedere i seguenti riferimenti:

Ref.	Descripción	Description	Descrizione	CANTIDAD QUANTITY QUANTITÀ
REC11-859135	TUERCA	NUT	DADO	4
REC10-816601	TORNILLO	SCREW	VITE	4
REC12-45176	ARANDELA	WASHER	RONDELLA	4
REC23-816583	TUBO AGUA	WATER TUBE	TUBO ACQUA	1
CMALPHAKITA	KIT ANODOS	ANODES KIT	KIT ANODI	1

PARTE SUPERIOR COMPLETA
COMPLETE DRIVE SHAFT HOUSING
PARTE SUPERIORE COMPLETA

Ref.	R.O. OEM	REDUCCIÓN RATIO RIDUZIONE	MOTOR ENGINE MOTORE
REC1547-861063A12	1547-861063A12	1.47 (20/22)	5.0L EFI / 5.7 / 350 MAG
REC1547-861063A10	1547-861063A10	1.62 (24/24)	4.3LH / 4.3L EFI / 5.0L
REC1547-861063A8	1547-861063A8	1.81 (17/19)	4.3L / 4.3LX
REC1547-861063A6	1547-861063A6	1.94 (20/24)	3.0L / 3.0LX

CARCASA PARTE SUPERIOR (Sin componentes)
DRIVE SHAFT HOUSING (Without components)
CARCASSA PARTE SUPERIORE (Senza componenti)

Ref.	R.O. OEM
REC1547-815930A7	1547-815930A7

OD469859-OK999999, (1991-97)

PARTE INFERIOR COMPLETA
COMPLETE GEAR HOUSING ASSEMBLY
PARTE INFERIORE COMPLETA

PARTE INFERIOR STD LOWER HOUSING STD PARTE INFERIORE STD	R.O. OEM	REDUCCIÓN RATIO RIDUZIONE	MOTOR ENGINE MOTORE
REC1623-815822A53	1623-815822A53 1623-815822A43 1623-815823A5 1623-815822A32	No reemplaza unidades de ratio 2.00 o 2.40 Will not replaces 2.00 or 2.40 ratio units Non sostituisce le unità di ratio 2.00 o 2.40	OD469859+
REC1623-815822A55 NEW	1623-815822A45 623-815822A55	Sólo para ratios 2.00 & 2.40 (14/28 dientes) Only for ratio 2.00 & 2.40 ratio units (14/28 teeth) Solamente per ratio 2.00 e 2.40 (14/28 denti)	OL100040+ (1998+)

PARTE INFERIOR C.R. LOWER HOUSING C.R. PARTE INFERIORE C.R.	R.O. OEM	REDUCCIÓN RATIO RIDUZIONE	MOTOR ENGINE MOTORE
REC1623-815822A47	1623-815822A47	No reemplaza unidades de ratio 2.00 o 2.40 Will not replaces 2.00 or 2.40 ratio units Non sostituisce le unità di ratio 2.00 o 2.40	OD469859+

CARCASA PARTE INFERIOR (Sin componentes)
GEAR HOUSING (Without components)
CARCASSA PARTE INFERIORE (Senza componenti)

Ref.	R.O. OEM
REC1623-815822A30	1623-815822A30 1623-815822A36

OD469859-OK999999

R / MR / ALPHA ONE (6225577 - OD469858)

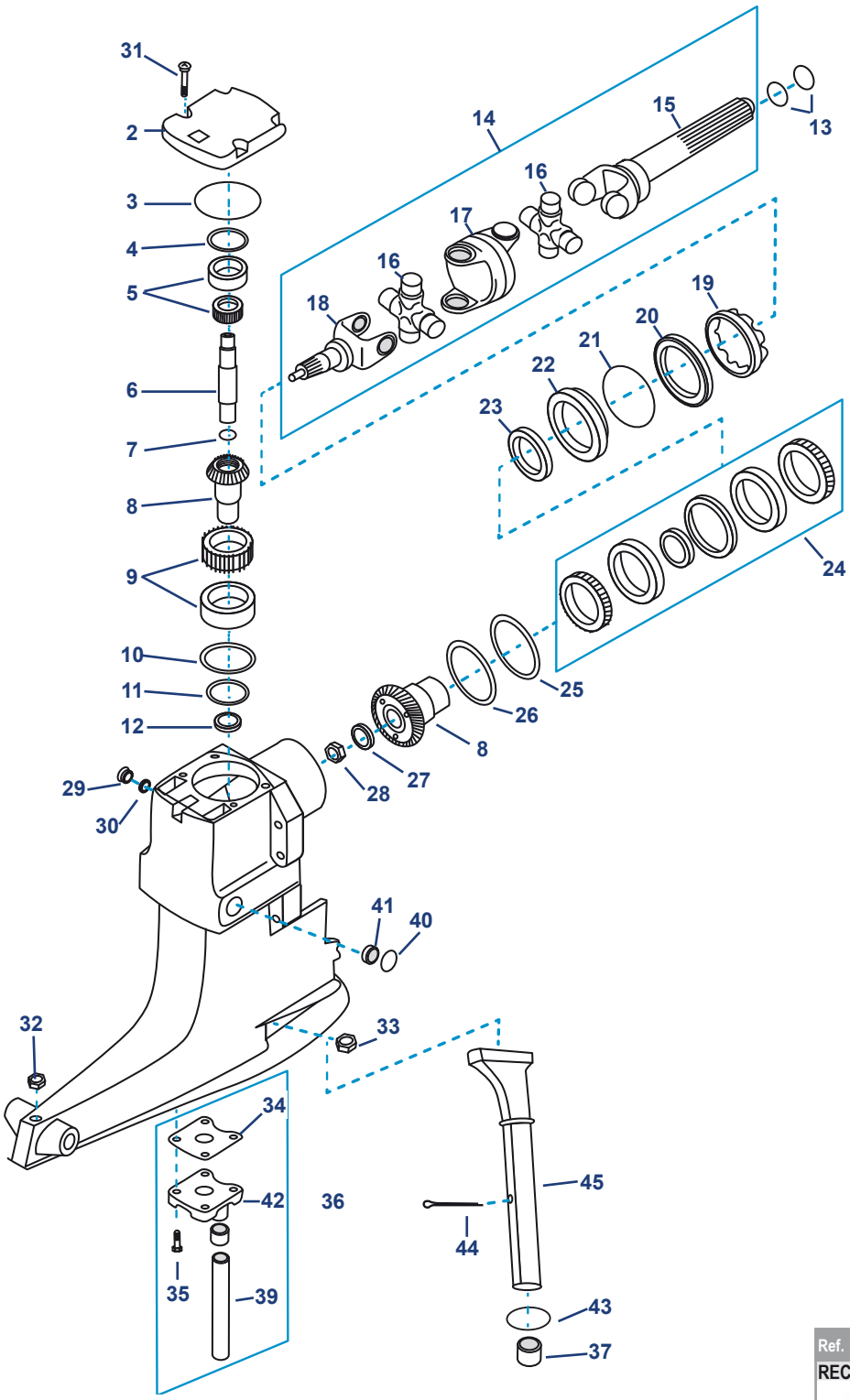

Abrazadera U de acoplamiento (39385A1) en modelos en línea.
U-joint coupling end yoke (39385A1) used on older in-line models.
Il giogo terminale di giunzione a giunto U (39385A1) ha utilizzato i modelli on-line in linea.

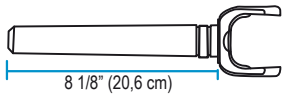

USO DE MODELOS ANTIGUOS DE COLAS EN MODELSO MERCRUISER IR-IMR
USE OF OLDER MODEL STERN DRIVE UNITS ON MERCRUISER IR-IMR MODELS
UTILIZZO DI MODELLI OLDER PIEDE SUI MODELLI IR-IMR MERCRUISER

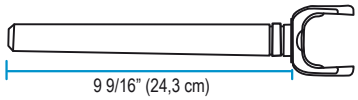

Mercury Marine no recomienda el uso de colas de modelos antiguos en modelos IR-IMR, ya que estas unidades no se acoplarán satisfactoriamente con el ensamblaje del transom. Además, las unidades en serie del modelo anterior, están equipadas con una horquilla de acoplamiento de unión en U (39385A1). Este eje es más corto que el (59830A1) usado en las unidades de impulsión de popa IR-IMR, y por lo tanto no acoplará completamente las estrías del motor. El uso del modelo más antiguo en un modelo de IR-IMR llevará al fallo de spline para acoplar al eje.
Mercury Marine does not recommended the use of older model stern drive units on IR-IMR models, as these units will not mate up satisfactorily with the transom assembly. Inaddition, the older model in-line stern drive units are equipped with U-joint coupling end yoke (39385A1). This yoke is shorter than yoke (59830A1) used on the IR-IMR stern drive units, and therefore will not fully engage the engine coupler splines. Use of an older in-line model stern drive unit on a IR-IMR model will result in a spline failure to coupling an/or yoke.
Mercury Marine non ha raccomandato l'uso Mercury Marine non ha raccomandato l'uso di unità di trasmissione a poppa più vecchie su modelli IR-IMR, in quanto queste unità non si addicono in modo soddisfacente con l'assemblaggio del trampolo. In aggiunta, le unità di comando a poppa in linea in versione anteriore sono dotate di giogo terminale di giunzione a U (39385A1). Questo giogo è più corto del giogo (59830A1) usato sulle unità di azionamento a poppa IR-IMR e pertanto non impegna completamente le spline di accoppiatore del motore. L'uso di un'unità anteriore di tipo a poppa modello in linea su un modello IR-IMR provocherà un errore di spline per accoppiare un / o giogo.

Ref.	R.O. OEM
REC27-64818Q4	26-64818Q4 27-64718A1

Kit juntas
Gasket kit
Kit guarnizione

Ref.	R.O. OEM
REC26-32511A1	26-32511A1

Kit retenes
Seal kit d.S. Housing
Kit riparazione

Ref.	R.O. OEM
REC43-18411A2	43-18411A4

KIT PIÑONES Y COJINETE
Reforzados 20/22 (Reducción 1.50) Para V8.
DRIVE SHAFT HOUSING GEAR SET
Heavy duty 20/22 (ratio 1.50) for V8
KIT PIGNONI E CUSCINETTI RINFORZATI
20/22 Denti (Riduzione 1.50) Per V8.

Nº	Ref.	R.O. OEM	Descripción	Description	Descrizione
2	REC94998A4	94998A4	TAPA CON COJINETE	COVER ASSEMBLY	COPERCHIO CON CUSCINETTO
3	REC25-32546	25-32546	ARO TÓRICO	O-RING	O-RING
4	REC15-45691A1	15-45691A1	SUPLEMENTO (PARA COJINETE REC31-61100A1)	SHIM (FOR REC31-61100A1)	SPESSORE (PER CUSCINETTO REC31-61100A1)
4	REC15-32563A1	15-32563A1	SUPLEMENTO (PARA COJINETE REC31-35988A12)	SHIM (FOR REC31-35988A12)	SPESSORE (PER CUSCINETTO REC31-35988A12)
5	REC31-61100A1	31-61100A1	COJINETE Ø EXTERIOR 49 mm	BEARING ASSY EXTERNAL Ø 49 mm	CUSCINETTO Ø ESTERNO 49 mm
5	REC31-32575T1	31-32575T1	COJINETE Ø EXTERIOR 45 mm	BEARING ASSY EXTERNAL Ø 45 mm	CUSCINETTO Ø ESTERNO 45 mm
6	REC45-55796	45-55796	EJE PIÑÓN	DRIVE SHAFT	ASSE PIGNONE
7	REC25-55801	25-55801	ARO TÓRICO	O-RING	O-RING
8	RM43-66773A3	43-66773A3	JUEGO PIÑONES (RED. 1.32) (16-20)	GEAR SET (1.32) (16-20)	KIT PIGNONI (RID. 1.32) (16-20)
8	REC43-18411A2	43-18411A2	JUEGO PIÑONES H.D. (RED.1.50) (20-22)	GEAR SET HD (1.50) (20-22)	KIT PIGNONI RINFORZATI (RID.1.50) (20-22)
8	REC43-45814A5	43-45814A5	JUEGO PIÑONES (RED.1.65) (24-24)	GEAR SET (1.65) (24-24)	KIT PIGNONI (RID.1.65) (24-24)
8	REC43-75325A3	43-75325A3	JUEGO PIÑONES H.D. (RED.1.84) (17-19)	GEAR SET HD(1.84)(17-19)	KIT PIGNONI RINFORZATI (RD.1.84) (17-19)
8	REC43-55778A3	43-55778A3	JUEGO PIÑONES (RED.1.98) (20-24)	GEAR SET (1.98) (20-24)	KIT PIGNONI (RID.1.98) (20-24)
9	REC31-32573A1	31-32573A1	RODAMIENTO (RED.1.50) ANTIGUA	ROLLER BEARING (1.50) OLD	CUSCINETTO (RID.1.50) VECCHIO MODELLO
9	REC31-35990A1	31-35990A1	RODAMIENTO (RED.1.65-1.84-1.98)	ROLLER BEARING (1.65-1.84-1.98)	CUSCINETTO (RID.1.65-1.84-1.98)
9	REC31-66818A1	31-66818A1	RODAMIENTO (RED.1.32)	ROLLER BEARING (1.32)	CUSCINETTO (RID.1.32)
10	REC15-36178A02	15-36178A02	SUPLEMENTO	SHIM	SPESSORE
11	REC26-32511	26-32511	RETÉN	OIL SEAL	PARAOLIO
12	REC26-965031	26-965031	RETÉN	OIL SEAL	PARAOLIO
13	REC25-25439	25-25439	ARO TÓRICO	O-RING	O-RING
14	REC814819A2	814819A2	CARDÁN COMPLETO	U-JOINT ASSEMBLY	CARDANO COMPLETO
15	REC59830A7	59830A7	EJE LARGO CARDÁN (9-9/16"	YOKE ASSEMBLY (9-9/16")	ASSE CARDANO (9-9/16")
16	REC3850812	75832T1	CRUCETA CARDÁN	U-JOINT	CROCIERA CARDANO
16	REC75832T	75832T	CRUCETA CARDÁN PARA 4 EN LÍNEA Y V-6	U-JOINT FOR 4 INLINE & V6	CROCIERA CARDANO PER MOTORI 4 IN LINEA E -6
16	REC805536A2	805536A2	CRUCETA AUTOENGRASE SIN MANTENIMIENTO	U-JOINT SELF GREASE	CROCIERA AUTOINGRASSANTE
17	REC393831	393831	RÓTULA CARDÁN	SOCKET	SEDE CARDANO
18	REC46020T02	46020T02	EJE CORTO CARDÁN	YOKE	ASSE CARDANO
19	REC8168112	8168112	TUERCA PORTA RETÉN	RETAINER	DADO, SEDE PARAOLIO
20	REC35983	35983	ARO METÁLICO	RING	O-RING METALLICO
21	REC25-70937	25-70937	ARO TÓRICO	O-RING	O-RING
22	REC66081A2	66081A2	CIERRE CARCASA	CARRIER ASSEMBLY	CHIUSURA CARCASSA
23	REC26-823894	26-823894	RETÉN	OIL SEAL	PARAOLIO
24	REC31-35988A12	31-35988A12	RODAMIENTO EXCEPTO 1.32	ROLLER BEARING (ALL RATIO EXCEPT 1.32)	CUSCINETTO ECCETTO 1.32
25	REC15-35980A1	15-35980A1	SUPLEMENTO	SHIM	SPESSORE
26	REC15-71013	15-71013	SUPLEMENTO	SHIM	SPESSORE
27	REC12-45810	12-45810	ARANDELA TOPE	WASHER	RONDELLA
28	REC11-22339	11-22339	TUERCA	NUT	DADO
29	REC10-79953Q04	10-79953Q04	TAPÓN ACEITE	SCREW	TAPPO OLIO
30	REC12-191833	12-191833	JUNTA TAPÓN	WASHER	GUARNIZIONE TAPPO
31	REC10-98794	10-98794	TORNILLOS TAPA 3/8-16	SCREW 3/8-16	VITE 3/8-16
32	REC19-47579	19-47579	TAPA PLÁSTICO	PLUG	COPERCHIO IN PLASTICA
33	REC11-34933	11-859116	TUERCA	NUT	DADO
34	REC27-558101	27-55810 1	JUNTA	GASKET	GUARNIZIONE
35	REC10-28668	10-28668	TORNILLO	SCREW	VITE
36	REC42724A3	42724A3	JUEGO REFRIGERACIÓN	WATER POCKET COVER KIT	KIT RIPARAZIONE
37	REC23-32632	23-32632	CASQUILLO	BUSHING	BOCCOLA
39	REC32-54236	32-54236	TUBO DE GOMA	WATER TUBE	TUBO IN GOMMA
40	REC19-42682	19-42682	TAPÓN	WELCH PLUG (1-174 O.D.)	TAPPO
41	REC22-428611	22-428611	TAPA TAPÓN	PIPE PLUG	COPERCHIO TAPPO
42	REC26-36557	26-36557	CASQUILLO GOMA	GROMMET	BOCCOLA IN GOMMA
43	REC12-32666	12-32666	ARANDELA	WASHER	RONDELLA
44	REC18-32665	18-32665	PASADOR	PIN	FERMO
45	REC621041	621041	EJE SELECTOR	SELECTOR SHAFT	ASSE SELETTORE

MC1 / R

Ref.	R.O. OEM
REC12110	

Kit reparacion / Seal kit / Kit riparazione
(1970-83)

Ref.	R.O. OEM
REC47-89984Q5	

Kit reparacion / Seal kit / Kit riparazione

Ref.	R.O. OEM
REC46-64141A11	

Kit reparacion / Seal kit / Kit riparazione
MC1 (-1968)

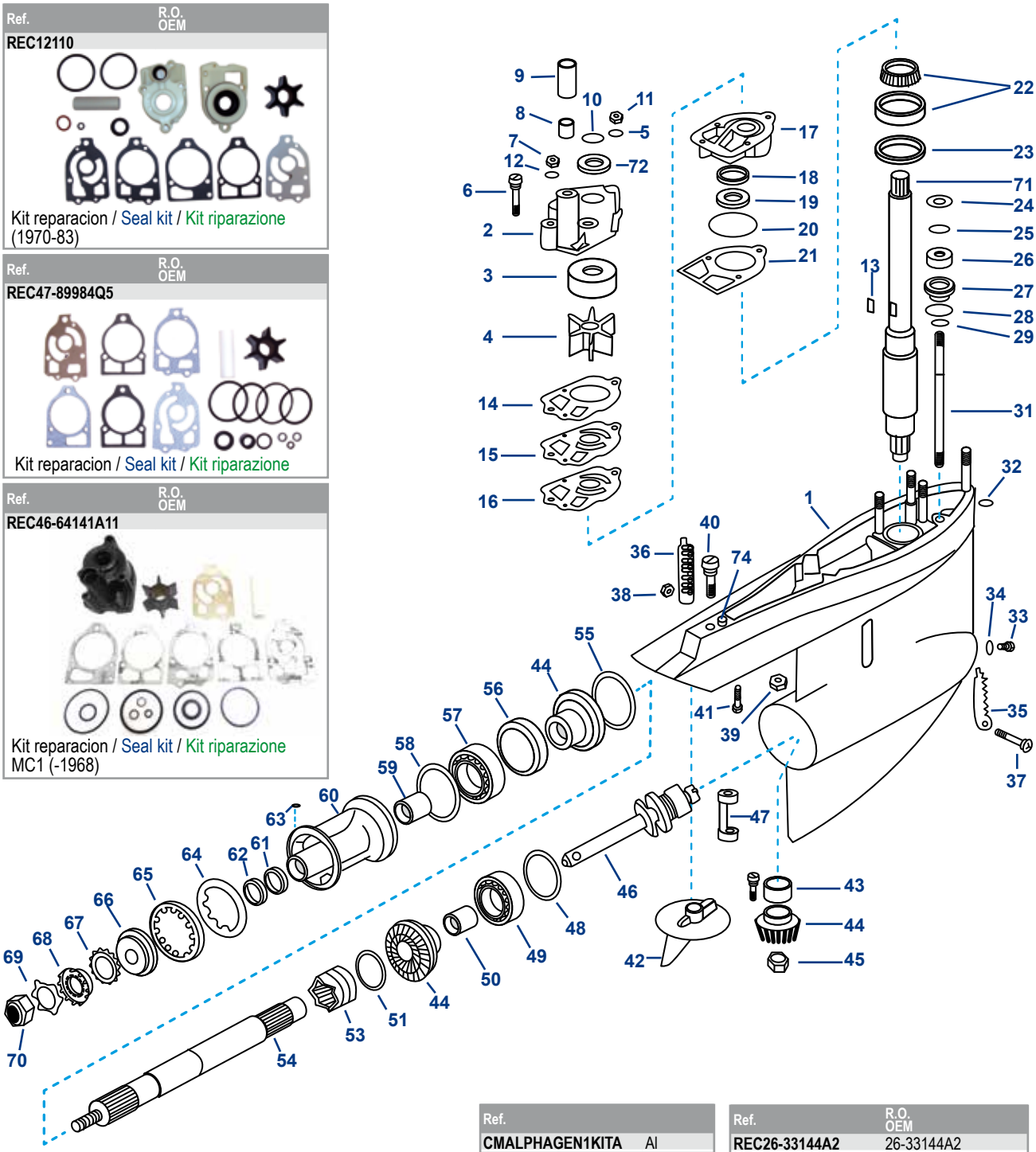

Ref.	R.O. OEM
REC11-52707Q1	11-52707Q1

Kit cierre hélice
Propeller nut kit
Kit ciussura elicha

Ref.	
CMALPHAGEN1KITA	Al
CMALPHAGEN1KITM	MG
TENKITALPHAONE/1	ZN

Kit ánodos
Anode kit
Kit anodi

Ref.	R.O. OEM
REC26-33144A2	26-33144A2

Kit reparacion
Seal kit
Kit riparazione

Nº	Ref.	R.O. OEM	Descripción	Description	Descrizione
1	REC1623-5356A4	1623-5356A4	CARCASA	HOUSING	CARCASSA
2	REC46-96148T1	46-96148T1	CUERPO BOMBA AGUA	HOUSING WATER PUMP	CORPO POMPA ACQUA
3	REC48752T	48752T	CASQUILLO BOMBA	INSERT	BOCCOLA
4	REC47-89984T4	47-89984T4	IMPULSOR	IMPELLER	GIRANTE
5	REC92995-08600	12-36001	ARANDELA	WASHER	RONDELLA

Nº	Ref.	R.O. OEM	Descripción	Description	Descrizione
6	REC10-30720	10-30720	TORNILLO	SCREW	VITE
7	REC11-8267089	11-8267089	TUERCA	NUT	DADO
8	REC26-38970	26-38970	RETÉN	OIL SEAL	TENUTA
9	REC23-29804T	23-29804T	TUBO GUÍA	WATER PIPE	TUBO
10	REC25-30613	25-30613	ANILLO GOMA	RUBBER RING	TENUTA
11	REC11-13436	11-13436	TUERCA	NUT	DADO
12	REC12-29245	12-29245	ARANDELA	WASHER	RONDELLA
13	REC8M0032834	28-8M0032834	CHAVETA	KEY	CHIAVETTA
14	REC27-858524	27-858524	JUNTA TAPA BOMBA	COVER GASKET	GUARNIZIONE COPERCHIO
15	REC324351	324351	TAPA BOMBA AGUA	COVER	COPERCHIO POMPA ACQUA
16	REC27-856081	27-856081	JUNTA BOMBA	PUMP GASKET	GUARNIZIONE POMPA
17		46-57234A1	BASE BOMBA	PUMP BASE	BASE POMPA
18	REC26-16977	26-16977	RETÉN	SEAL	TENUTA
19	REC26-89238	26-89238	RETÉN	SEAL	TENUTA
20	REC25-33145	25-33145	ARO TÓRICO	O-RING	O-RING
21	REC27-856704	27-856704	JUNTA	GASKET	GUARNIZIONE
22	REC31-53079A1	31-53079A1	RODAMIENTO	BEARING	CUSCINETTO
23	REC15-57007A1	15-57007A1	SUPLEMENTO	SPACER	DISTANZIALE
24	REC8M0042641	12-8M0042641	ARANDELA	WASHER	RONDELLA
25	REC12-31266	12-31266	ARANDELA	WASHER	RONDELLA
26	REC26-8164641	26-8164641	RETÉN	SEAL	TENUTA
27	REC23-30617A2	23-30617A2	ACOPLE EJE	ATTACHING SHAFT	FISSAGGIO ASSE
28	REC25-25439	25-25439	ARO TÓRICO	O-RING	TENUTA
29	REC12-27880	12-27880	ARO	O-RING	O-RING
31	REC774811	774811	EJE TRANSMISIÓN	SHIFT	ASSE
32	REC26-455771	26-455771	RETÉN	SEAL	TENUTA
33	REC22-67892A05	8M0058389	TORNILLO CON RETÉN	SCREW WITH SEAL	VITE CON TENUTA
34	REC12-191833	12-191833	JUNTA	GASKET	GUARNIZIONE
35	REC934231	934231	TAPA REFRIGERACIÓN	CAP	COPERCHIO
36	REC934241	934241	TAPA REFRIGERACIÓN	CAP	COPERCHIO
37	REC10-76156	10-76156	TORNILLO	SCREW	VITE
38	REC11-859124	11-859124	TUERCA	NUT	DADO
39	REC11-34933	11-859116	TUERCA	NUT	DADO
40	REC10-32470	10-32470	TORNILLO	SCREW	VITE
41	REC10-30206	10-30206	TORNILLO	SCREW	VITE
42	CM31640	31640Q4	ANODO TIMÓN ZINC	ZINC ANODE	ANODO ZINCO
42	CM31640A	31640Q4	ANODO TIMÓN ALUM.	ALLUMINIUM ANODE	ANODO ALLUMINIO
43	REC31-92366A1	31-92366A1	RODAMIENTO	BEARING	CUSCINETTO
44		43-96084A4	KIT PIÑONES	PINION KIT	KIT PIGNONE
45	REC11-35921	11-35921	TUERCA PIÑÓN	PINION NUT	PIGNONE DADO
46	REC818349T1	818349T1	EJE DESPLAZABLE	SLIDE SHIFT	PASSANTE
47	REC76865	76865	HORQUILLA CAMBIO	CLIP	CLIP
48	REC15-47397A1	15-47397A1	ARANDELA	WASHER	RONDELLA
49	REC31-35928T1	31-35928T1	RODAMIENTO	BEARING	CUSCINETTO
50	REC31-30895T	31-30895T	RODAMIENTO	BEARING	CUSCINETTO
51	REC31-30895T	24-30893	MUELLE	SPRING	MOLLA
52	REC17-8M0084681	8M0020941	PASADOR	PIN	SPINOTTO
53	REC52-853594T	52-853594T	PIÑÓN CAMBIO	SHAFT PINION	PIGNONE CAMBIO
54	REC44-824110	44-824110	EJE HÉLICE	SHAFT PROPELLER	ASSE ELICA
56	REC35915	35915	SEPARADOR PIÑÓN	SPACER PINION	DISTANZIALE PIGNONE
57	REC30-88957T	30-88957T	RODAMIENTO	BEARING	CUSCINETTO
58	REC25-31534	25-31534	ARO TÓRICO	O-RING	ANELLO
59	REC387247	31-30956T	RODAMIENTO	BEARING	CUSCINETTO
60	REC818763A10	818763A10	COJINETE COLA	SHAFT BEARING	CUSCINETTO PIEDE
61	REC26-76868	26-76868	RETÉN INTERIOR	INNER SEAL	TENUTA INTERNO
62	REC26-12224	26-12224	RETÉN EXTERIOR	OUTLER SEAL	TENUTA ESTERNO
63	REC28-30281	28-30281	CIERRE	CAP	CHIUSURA
64	REC14-79447	14-79447	ARANDELA CIERRE	WASHER CAP	RONDELLA CHIUSURA
65	REC8M2011027	8M2011027	TUERCA	NUT	DADO
66	REC12-835467Q01	12-835467Q01	SEPARADOR	SPACER	DISTANZIALE
67	REC13-423511	13-42351-1	ARANDELA CIERRE	WASHER CAP	RONDELLA CHIUSURA
68	REC12-31211Q03	12-31211Q03	CASQUILLO	INSERT, CARTDRIGE	GHIERA
69	REC90508-ZW1-003	816629Q	ARANDELA TUERCA	WASHER NUT	RONDELLA DADO
70	REC90301-ZW1-003	11-827614	TUERCA EJE	NUT SHAFT	DADO ASSE
71	REC45-41939F1	45-41939F1	EJE TRANSMISIÓN	TRANSMITION SHAFT	ASSE TRASMISSIONE
72	REC25-30271	25-30271	ARANDELA	WASHER	RONDELLA
74	REC331880	17-35973	PASADOR	PIN	SPINOTTO

MR / ALPHA ONE

Ref.	R.O. OEM	
CM806105	806105Q1	Zn
CM806105A	806105Q1	Al

Ánodo eje hélice
Prop shaft anode
Anodo asse elica

Ref.	R.O. OEM
REC12120	

Kit reparación / Seal kit / Kit riparazione

Ref.	R.O. OEM
REC47-89984Q5	

Kit reparación / Seal kit / Kit riparazione

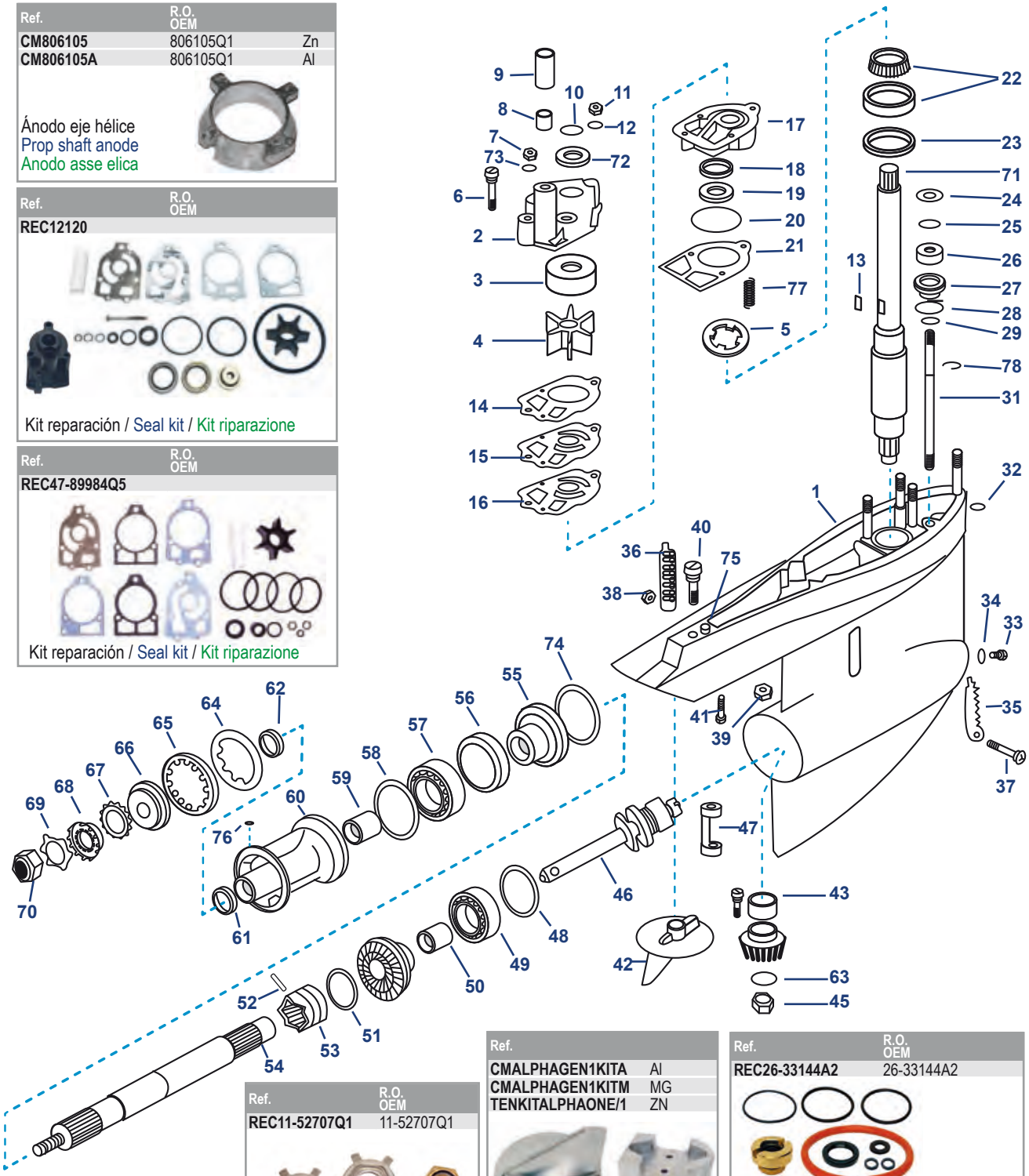

Ref.	R.O. OEM
REC11-52707Q1	11-52707Q1

Kit cierre hélice
Propeller nut kit
Kit chiussura elicha

Ref.	
CMALPHAGEN1KITA	Al
CMALPHAGEN1KITM	MG
TENKITALPHAONE/1	ZN

Kit ánodos
Anode kit
Kit anodi

Ref.	R.O. OEM
REC26-33144A2	26-33144A2

Kit reparacion
Seal kit
Kit riparazione

Nº	Ref.	R.O. OEM	Descripción	Description	Descrizione
1	REC1623-8951A37	1623-8951A37	CARCASA COLA	HOUSING	CARCASSA
2	REC46-96148T1	46-96148T1	CUERPO BOMBA AGUA	HOUSING WATER PUMP	CORPO POMPA ACQUA
3	REC48752T	48752T	CASQUILLO BOMBA	INSERT	BOCCOLA
4	REC47-89984T4	47-89984T4	IMPULSOR	IMPELLER	GIRANTE
5	REC8245191	8245191	ARANDELA	WASHER	RONDELLA
6	REC10-96411	10-96411	TORNILLO	SCREW	VITE
7	REC11-8267089	11-8267089	TUERCA	NUT	DADO
8	REC26-38970	26-38970	RETÉN	SEAL	TENUTA

Nº	Ref.	R.O. OEM	Descripción	Description	Descrizione
9	REC23-29804T	23-29804T	TUBO GUÍA	WATER PIPE	TUBO
10	REC25-30613	25-30613	ARO TÓRICO	O-RING	O-RING
11	REC11-13436	11-13436	TUERCA	NUT	DADO
12	REC92995-08600	12-36001	ARANDELA	WASHER	RONDELLA
13	REC8M0032834	8M0032834	CHAVETA	KEY	CHIAVETTA
14	REC27-858524	27-858524	JUNTA TAPA BOMBA	COVER GASKET	GUARNIZIONE COPERCHIO
15	REC324351	324351	TAPA BOMBA AGUA	COVER	COPERCHIO
16	REC27-856081	27-856081	JUNTA BOMBA	PUMP GASKET	GUARNIZIONE POMPA
17	REC46-44292Q03	46-44292Q03	BASE BOMBA	PUMP BASE	BASE POMPA
18	REC26-16977	26-16977	RETÉN	SEAL	TENUTA
19	REC26-89238	26-89238	RETÉN	SEAL	TENUTA
20	REC25-90011	25-90011	ARO TÓRICO (Ø 2.188")	O-RING (Ø 2.188")	O-RING (Ø 2.188")
20	REC25-38099	25-38099	ARO TÓRICO (Ø 2.125")	O-RING (Ø 2.125")	O-RING (Ø 2.125")
21	REC27-426311	27-42631-1	JUNTA	GASKET	GUARNIZIONE
22	REC31-36387A1	31-36387A1	RODAMIENTO	BEARING	CUSCINETTO
23	REC15-42637A1	15-42637A1	GRUESO	SHIM	SPESSORE
24	REC8M0042641	8M0042641	ARANDELA	WASHER	RONDELLA
25	REC12-31266	12-31266	ARANDELA	WASHER	RONDELLA
26	REC26-8164641	26-8164641	RETÉN	SEAL	TENUTA
27	REC23-30617A2	23-30617A2	ACOPLE EJE	ATTACHING SHAFT	FISSAGGIO ASSE
28	REC25-25439	25-25439	ARO TÓRICO	O-RING	O-RING
29	REC12-27880	12-27880	ARO	O-RING	O-RING
31	REC774811	774811	EJE TRANSMISIÓN	TRANSMITION SHAFT	ASSE TRASMISSIONE
32	REC26-455771	26-45577 1	RETÉN	SEAL	TENUTA
33	REC22-67892A05	8M0058389	TORNILLO CON RETÉN	SCREW WITH SEAL	VITE CON TENUTA
34	REC12-191833	12-191833	JUNTA	GASKET	GUARNIZIONE
35	REC934231	934231	TAPA REFRIGERACIÓN	CAP	COPERCHIO
36	REC934241	934241	TAPA REFRIGERACIÓN	CAP	COPERCHIO
37	REC10-76156	10-76156	TORNILLO	SCREW	VITE
38	REC11-859124	11-859124	TUERCA	NUT	DADO
39	REC11-34933	11-859116	TUERCA	NUT	DADO
40	REC10-32470	10-32470	TORNILLO	SCREW	VITE
41	REC10-30206	10-30206	TORNILLO	SCREW	VITE
42	CM31640	31640Q4	ANODO TIMÓN ZINC	ZINC SHAFT ANODE	ANODO ZINCO TIMONE
42	CM31640A	31640Q4	ANODO TIMÓN ALUMINIO	ALLUMINIUM SHAFT ANODE	ANODO ALLUMINIO TIMONE
43	REC387817	31-42647A1	RODAMIENTO	BEARING	CUSCINETTO
45	REC11-35921	11-35921	TUERCA PIÑÓN	PINION NUT	DADO PIGNONE
46	REC818349T1	818349T1	EJE DESPLAZABLE	SLIDE SHIFT	PASSANTE
47	REC76865	76865	HORQUILLA CAMBIO	CLIP	CLIP
48	REC15-47397A1	15-47397A1	ARANDELA	WASHER	RONDELLA
49	REC31-35928T1	31-35928T1	RODAMIENTO Ø 47,6 mm	BEARING Ø 47.6 mm	CUSCINETTO Ø 47.6 mm
49	REC31-828437A2	31-828437A2	RODAMIENTO Ø 44,4 mm	BEARING Ø 44.4 mm	CUSCINETTO Ø 44.4 mm
50	REC31-30895T	31-30895T	RODAMIENTO	BEARING	CUSCINETTO
51	REC24-30893	24-30893	MUELLE	SPRING	MOLLA
52	REC17-8M0084681	8M0020941	PASADOR	PIN	SPINOTTO
53	REC52-853594T	52-853594T	PIÑÓN CAMBIO	SHAFT PINION	PIGNONE CAMBIO
54	REC44-824110	44-824110	EJE HÉLICE	SHAFT PROPELLER	ASSE ELICA
54	REC44-8146061	44-8146061	EJE HÉLICE CONTRAROTACIÓN	SHAFT PROPELLER COUNTER ROTATION	ASSE ELICA CONTROROTANTE
55	REC43-828073A1	43-828073A1	PIÑÓN MARCHA A ATRÁS	PINION REVERSE	PIGNONE RETROMARCIA
56	REC681001	681001	SEPARADOR PIÑÓN	PINION SPACER	DISTANZIALE PIGNONE
57	REC30-88957T	30-88957T	RODAMIENTO	BEARING	CUSCINETTO
58	REC25-31534	25-31534	ARO TÓRICO	O-RING	ANELL
59	REC387247	31-30956T	RODAMIENTO	BEARING	CUSCINETTO
60	REC818763A10	818763A10	COJINETE COLA	SHAFT BEARING	CUSCINETTO PIEDE
60	REC14587A7	14587A5	COJINETE COLA CONTRAROTACIÓN	SHAFT BEARING COUNTER ROTATION	CUSCINETTO PIEDE CONTROROTANTE
61	REC26-76868	26-76868	RETÉN INTERIOR	INNER SEAL	TENUTA INTERNO
62	REC26-12224	26-12224	RETÉN EXTERIOR	OUTLER SEAL	TENUTA ESTERNO
63	REC350038	12-92721	CIERRE	CAP	CHIUSURA
64	REC14-18323	14-18323	ARANDELA CIERRE	WASHER	RONDELLA CHIUSURA
65	REC8M2011027	8M2011027	TUERCA	NUT	DADO
66	REC12-835467Q01	12-835467Q01	SEPARADOR	SPACER	DISTANZIALE
67	REC13-423511	13-423511	ARANDELA CIERRE	WASHER	RONDELLA CHIUSURA
68	REC12-31211Q03	12-31211Q03	CASQUILLO	INSERT	BOCCOLA
69	REC90508-ZW1-003	14-816629Q	ARANDELA TUERCA	WASHER NUT	RONDELLA DADO
70	REC90301-ZW1-003	11-827614	TUERCA EJE	SHAFT NUT	DADO ASSE
71	REC45-42634	45-42634	EJE TRANSMISIÓN	TRANSMITION SHAFT	ASSE TRASMISIONE
72	REC25-30271	25-30271	RETÉN	SEAL	TENUTA
73	REC12-29245	12-29245	ARANDELA	WASHER	RONDELLA
74	REC23-824108	23-824108	ESPACIADOR	SPACER	DISTANZIALE
75	REC331880	17-35973	PASADOR	PIN	SPINOTTO
76	REC28-30281	28-30281	CHAVETA	KEY	CHIAVETTA
77	REC24-34576	24-34576	MUELLE	SPRING	MOLLA
78	REC53-29641	53-29641	CLIP	LOCKER	CLIP

ALPHA ONE GEN II
OD469859-0K999999 (1991-97)

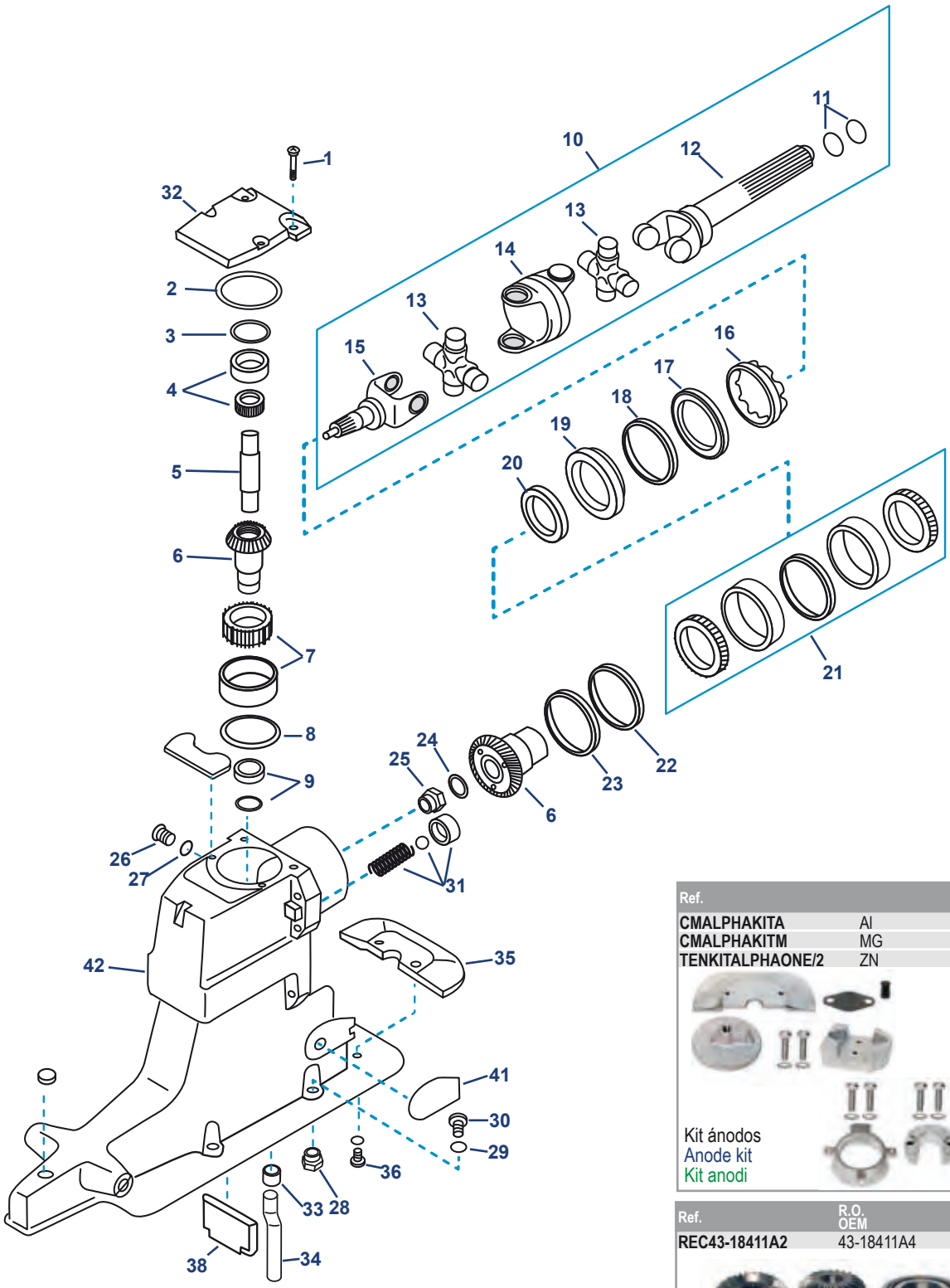

Ref.	
CMALPHAKITA	Al
CMALPHAKITM	MG
TENKITALPHAONE/2	ZN

Kit ánodos
Anode kit
Kit anodi

Ref.	R.O. OEM
REC43-18411A2	43-18411A4

KIT PIÑONES Y COJINETE
Reforzados 20/22 (Reducción 1.50) Para V8.
DRIVE SHAFT HOUSING GEAR SET
Heavy duty 20/22 (ratio 1.50) for V8
KIT PIGNONI E CUSCINETTI RINFORZATI
20/22 Denti (Riduzione 1.50) Per V8.

Ref.	R.O. OEM
REC26-88397A1	26-88397A1

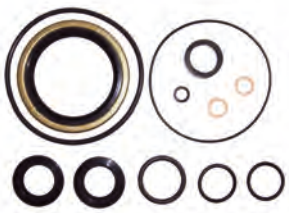

Kit reparación
Gearcase seal kit
Kit riparazione

Ref.	R.O. OEM
REC27-94996Q2	27-94996Q2

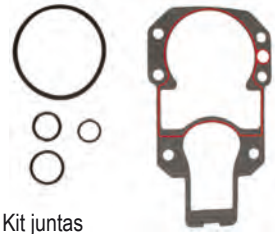

Kit juntas
Gearcase seal kit
Kit riparazione

Nº	Ref.	R.O. OEM	Descripción	Description	Descrizione
1	REC10-98794	10-98794	TORNILLO	SCREW	VITE
2	REC25-32546	25-32546	ARO TÓRICO	O-RING	O-RING
3	REC15-45691A1	15-45691A1	GRUESO (PARA RODAMIENTO 21510)	SHIM (FOR BEARING 21510)	SPESSORE (PER CUSCINETTO 21510)
3	REC15-32563A1	15-32563A1	GRUESO (PARA RODAMIENTO 21511)	SHIM (FOR BEARING 21511)	SPESSORE (PER CUSCINETTO 21511)
4	REC31-61100A1	31-61100A1 (1991-95)	RODAMIENTO Ø EXTERIOR 49 mm	BEARING Ø EXTERNAL 49 mm	CUSCINETTO Ø ESTERNO 49 mm
4	REC31-32575T1	31-32575T1 (-1996)	RODAMIENTO Ø EXTERIOR 45 mm	BEARING Ø EXTERNAL 45 mm	CUSCINETTO Ø ESTERNO 45 mm
5	REC45-557961	45-55796-1	EJE PIÑÓN	PINION SHAFT	ASSE PIGNONE
6	REC43-18411A2	43-18411A2	KIT PIÑONES (REDUCCIÓN 1.50/1.47) (20-22) 1991-97	PINION KIT (RATIO 1.50/1.47) (20-22) 1991-97	KIT PIGNONE (RIDUZIONE 1.50/1.47) (20-22) 1991-97
6	REC43-45814A5	43-45814A5	KIT PIÑONES (REDUCCIÓN 1.65/1.62) (24-24) 1991-97	PINION KIT (RATIO 1.65/1.62) (24-24) 1991-97	KIT PIGNONE (RIDUZIONE 1.65/1.62) (24-24) 1991-97
6	REC43-75325A3	43-75325A3	KIT PIÑONES (REDUCCIÓN 1.84/1.81) (17-19) 1991-97	PINION KIT (RATIO 1.84/1.81) (17-19) 1991-97	KIT PIGNONE (RIDUZIONE 1.84/1.81) (17-19) 1991-97
6	REC43-55778A3	43-55778A3	KIT PIÑONES (REDUCCIÓN 1.98/1.94) (20-24) 1991-97	PINION KIT (RATIO 1.98/1.94) (20-24) 1991-97	KIT PIGNONE (RIDUZIONE 1.98/1.94) (20-24) 1991-97
7	REC31-35990A1	31-35990A1	RODAMIENTO (REDUCCIÓN 1.65, 1.84, 1.98, 2.40)	BEARING (RATIO 1.65, 1.84, 1.98, 2.40)	CUSCINETTO (RIDUZIONE 1.65, 1.84, 1.98, 2.40)
7	REC31-32573A1	31-32573A1	RODAMIENTO (REDUCCIÓN 1.47)	BEARING (RATIO 1.47)	CUSCINETTO (RIDUZIONE 1.47)
8	REC15-36178A02	15-36178A02	SUPLEMENTO	SPACER	DISTANZIALE
9	REC26-66302	26-66302	RETÉN	SEAL	TENUTA
10	REC814819A2	814819A2	KIT TRANSMISIÓN (1991-97)	TRANSMITION KIT (1991-97)	KIT TRASMISSIONE (1991-97)
10	REC864281A2	864281A2	KIT TRANSMISIÓN (1998+)	TRANSMITION KIT (1998+)	KIT TRASMISSIONE (1998+)
11	REC25-25439	25-25439	ARO TORICO	O-RING	O-RING
11	REC25-35027	25-35027	ARO TÓRICO	O-RING	O-RING
12	REC59830A7	59830A7	UNIÓN COLA - MOTOR	UNION DRIVE SHAFT - ENGINE	ASSE CARDANO PIEDE MOTORE
13	REC3850812	75832T1	CRUCETA (1991-95)	JOINT (1991-95)	CROCETTA (1991-95)
13	REC805536A2	805536A2	CRUCETA (1996+)	JOINT (1996+)	CROCETTA (1996+)
13	REC75832T	75832T	CRUCETA PARA 4 EN LÍNEA Y V6 (-1995)	JOINT 4 INLINE & V6 (-1995)	CROCETTA 4 IN LINEA E V6 (-1995)
14	REC393831	393831	CARDAN	CARDAN	CARDAN
15	REC46020T02	46020T02	UNIÓN COLA-CARDAN (1991-97)	UNION DRIVE SHAFT - CARDAN (1991-97)	ASSE CARDANO PIE-DE(1991-97)
16	REC8168112	8168112	TUERCA PORTA RETÉN	SEAL'S NUT	DADO PORTA TENUTA
17	REC35983	35983	ARO	O-RING	O-RING
18	REC25-70937	25-70937	ARO TÓRICO	O-RING	O-RING
19	REC66081A2	66081A2	CUERPO RETÉN CARDAN	HOUSING CARDAN SEAL	PARAOLIO CARDANO
20	REC26-823894	26-823894	RETÉN	SEAL	TENUTA
21	REC31-35988A12	31-35988A12	RODAMIENTO (1991-97)	BEARING (1991-97)	CUSCINETTO (1991-97)
22	REC15-35980A1	15-35980A1	SUPLEMENTO	SPACER	DISTANZIALE
23	REC15-71013	15-71013	ESPACIADOR	SPACER	DISTANZIALE
24	REC12-45810	12-45810	ARANDELA	WASHER	RONDELLA
25	REC11-22339	11-22339	TUERCA	NUT	DADO
26	REC10-79953Q04	10-79953Q04	TORNILLO COLA	SCREW	VITE
27	REC12-191833	12-191833	JUNTA	GASKET	GUARNZIONE
28	REC11-859135	859135	TUERCA	NUT	DADO
29	REC12-45176	12-35935	ARANDELA	WASHER	RONDELLA
30	REC10-816601	10-816601	TORNILLO	SCREW	VITE
31	REC24-17997A1	24-17997A1	KIT MUELLE BOLA	SPRING BALL KIT	KIT MOLLA
32	REC828692A1	828692A1	TAPA SUPERIOR CON NIVEL DE ACEITE	UPPER CAP WITH OIL LEVEL	COPERCHIO SUPERIORE CON LIVELLO OLIO
33	REC26-88397	26-88397	TUBO GOMA	RUBBER TUBE	TUBO GOMMA
34	REC32-860220	32-860220	TUBO SUBIDA AGUA	WATER UP TUBE	TUBO ASPIRAZIONE ACQUA
35	CM821629	821629Q1	ANODO ZINC	ZINC ANODE	ANODO ZINCO
35	CM821629A	821629Q1	ANODO ALUMINIO	ALLUMINIUM ANODE	ANODO ALLUMINIO
36	REC10-28668	10-28688	TORNILLO	SCREW	VITE
38	RM815932	815932	SEPARADOR ESCAPE	SPACER EXHAUST	SPAZIATORE SCARICO
41	REC8M2015937	8M2015937	TAPA BABOR	PORT CAP	COPERCHIO SINISTRO
41	REC8M2015938	8M2015938	TAPA ESTRIBOR	STD CAP	COPERCHIO DESTRO
42	REC1547-815930A7	1547-815930A7	CARCASA	HOUSING	CARCASSA

ALPHA ONE GEN II
OL100040+ (1998+)

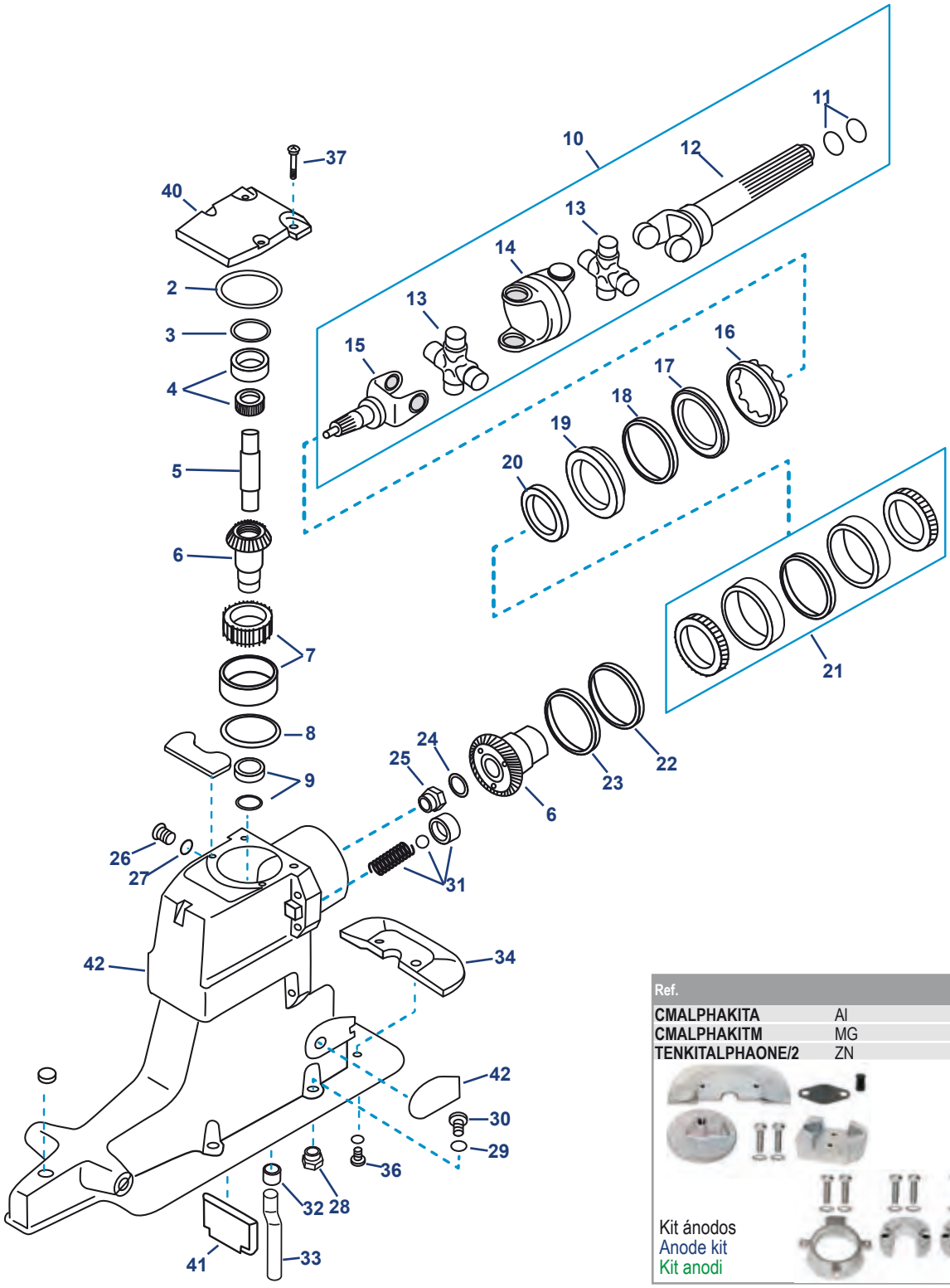

Ref.	
CMALPHAKITA	Al
CMALPHAKITM	MG
TENKITALPHAONE/2	ZN

Kit ánodos
Anode kit
Kit anodi

Ref.	R.O. OEM
REC26-88397A1	26-88397A1

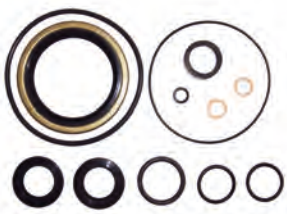

Kit reparación
Gearcase seal kit
Kit riparazione

Ref.	R.O. OEM
REC27-94996Q2	27-94996Q2

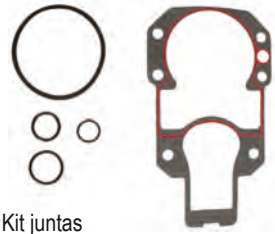

Kit juntas
Gearcase seal kit
Kit riparazione

Ref.	R.O. OEM
REC864281A2	864281A2

Kit transmision GNK (negro)
Yoke assembly GNK (black)
Giunto cardanico GNK (nero)

Nº	Ref.	R.O. OEM	Descripción	Description	Descrizione
2	**REC25-32546**	25-32546	ARO	O-RING	ANELLO
3	**REC15-32563A1**	15-32563A1	SUPLEMENTO (COJINETE 21511)	SHIM (FOR 21511 BEARING)	ESPESORE (CUSCINETTO 21511)
4	**REC31-32575T1**	31-32575T1	COJINETE (O.D. 1-25/32)	BEARING ASSEMBLY (O.D. 1-25/32)	CUSCINETTO (O.D. 1-25/32)
5	**REC45-557961**	45-557961	EJE	DRIVE SHAFT	ASSE
6	**REC43-853641A2**	43-853641A2	KIT PIÑONES (REDUCCIÓN 1.47) (20-22)	GEAR SET (1.47 RATIO) (20-22)	KIT PIGNONE (RIDUZIONE 1.47) (20-22)
6	**REC43-853640A2**	43-853640A2	KIT PIÑONES (REDUCCIÓN 2.00/1.62) (24-24)	GEAR SET (2.00/1.62 RATIO) (24-24)	KIT PIGNONE (RIDUZIONE 2.00/1.62) (24-24)
6	**REC43-853643A2**	43-853643A2	KIT PIÑONES (REDUCCIÓN 1.81) (17-19)	GEAR SET (1.81 RATIO) (17-19)	KIT PIGNONE (RIDUZIONE 1.81) (17-19)
6	**REC43-853642A2**	43-853642A2	KIT PIÑONES (REDUCCIÓN 2.40/1.94) (20-24)	GEAR SET (2.40/1.94 RATIO) (20-24)	KIT PIGNONE (RIDUZIONE 2.40/1.94) (20-24)
7	**REC31-35990A1**	31-35990A1	COJINETE (REDUCCIÓN 1.62, 1.81, 1.94, 2.00, 2.40)	ROLLER BEARING (1.62, 1.81, 1.94, 2.00, 2.40 RATIO)	CUSCINETTO (RIDUZIONE 1.62, 1.81, 1.94, 2.00, 2.40)
7	**REC31-32573A1**	31-32573A1	COJINETE (REDUCCIÓN 1.47)	ROLLER BEARING (1.47 RATIO)	CUSCINETTO (RIDUZIONE 1.47)
8	**REC15-36178A02**	15-36178A02	SUPLEMENTO	SHIM	SPESSORE
9	**REC26-66302**	26-66302	RETÉN (-OM400411)	OIL SEAL (-OM400411)	PARAOLIO (-OM400411)
9	**REC26-864319**	26-864319	RETÉN (OM400412+)	OIL SEAL (OM400412+)	PARAOLIO (OM400412+)
10	**REC814819A7**	814819A7	KIT TRANSMISIÓN (GRIS)	U-JOINT ASSEMBLY (GREY)	KIT TRASMISSIONE (GRIGIO)
10	**REC864281A2**	86481A2	KIT TRANSMISIÓN GKN (NEGRO) (OL100009+)	U-JOINT ASSEMBLY GKN (BLACK) (OL100009+)	KIT TRASMISSIONE GKN (NERO) (OL100009+)
11	**REC25-25439**	25-25439	ARO	O-RING	ANELLO
11	**REC25-35027**	25-35027	ARO	O-RING	ANELLO
12	**REC59830A7**	59830A7	UNIÓN COLA (-OM400411)	YOKE ASSY. (-OM400411)	UNIONE PIEDE (-OM400411)
12	**REC864281A1**	865491A01 864281A01	UNIÓN COLA (OM400412+)	YOKE ASSY. (OM400412+) (GKN)	UNIONE PIEDE (OM400412+)
13	**REC805536A2**	805536A2	CRUCETA CARDAN (-OM400411)	U-JOINT (-OM400411)	CROCETTA (-OM400411)
13	**REC865496A02**	865496A02	CRUCETA CARDAN (OM400412+)	U-JOINT (OM400412+)	CROCETTA (OM400412+)
14	**REC393831**	393831	CARDAN (-OM400411)	SOCKET (-OM400411)	CARDAN (-OM400411)
14	**REC865503T**	865503T	CARDAN (OM400412+)	SOCKET FROM (OM4004112+) (GKN)	CARDAN (OM400412+)
15	**REC853635**	853635	UNIÓN COLA CARDÁN (-OM400411)	YOKE (-OM400411)	UNIONE PIEDE -CARDAN (-OM400411)
15	**REC864282T**	864282T	UNIÓN COLA CARDÁN (OM4004112+)	YOKE (OM4004112+)	UNIONE PIEDE - CARDAN (OM400412+)
16	**REC8168112**	8168112	RETENEDOR	RETAINER	TENUTA
17	**REC35983**	35983	ANILLO	RING	ANELLO
18	**REC25-70937**	25-70937	ARO	O-RING	ANELLO
19	**REC66081A2**	66081A2	CUERPO RETÉN CARDAN	CARRIER ASSEMBLY	TENUTA
20	**REC26-823894**	26-823894	RETÉN ACEITE	OIL SEAL	PARAOLIO
21	**REC31-30894A5**	31-30894A5	KIT COJINETE	BEARING KIT	KIT CUSCINETTO
22	**REC15-35980A1**	15-35980A1	SUPLEMENTO	SHIM	SPESSORE
23	**REC15-71013**	15-71013	ESPACIADOR	SPACER	DISTANZIALE
24	**REC12-45810**	12-45810	ARANDELA	WASHER	RONDELLA
25	**REC11-22339**	11-22339	TUERCA	NUT	DADO
26	**REC10-79953Q04**	10-79953Q04	KIT TORNILLOS	SCREW KIT	KIT VITE
27	**REC12-191833**	12-191833	ARANDELA	WASHER	RONDELLA
28	**REC11-859135**	11-859135	TUERCA	LOCKNUT	DADO
29	**REC12-45176**	12-35935	ARANDELA	WASHER	RONDELLA
30	**REC10-816601**	10-816601	TORNILLO	BOLT	VITE
31	**REC24-17997A1**	24-17997A1	KIT BOLA ENGRASE	SPRINT KIT	KIT BOLLA ENGRASSATORE
32	**REC26-88397**	26-88397	GRUESO	GROMMET	SPESSORE
33	**REC32-860220**	32-860220	TUBO GUÍA	GUIDE TUBE	TUBO GUIDA
34	**CM821629**	821629Q1	ANODO ZINC	ZINC ANODE	ANODO ZINCO
34	**CM821629A**	821629Q1	ANODO ALUMINIO	ALUMINUM ANODE	ANODO ALLUMINIO
36	**REC10-28668**	10-28668	TORNILLO	SCREW	VITE
37	**REC10-98794**	10-98794	TORNILLO	SCREW	VITE
40	**REC828692A1**	828692A1	TAPA SUPERIOR	COVER ASSEMBLY	COPERCHIO
41	**RM815932**	815932	SEPARADOR ESCAPE	FILLER WALL	SEPARATORE
42	**REC8M2015937**	8M2015937	GRUESO BABOR	WEAR PAD - PORT	SPESSORE BABORDO
42	**REC8M2015938**	8M2015938	GRUESO ESTRIBOR	WEAR PAD - STARBOARD	SPESSORE TRIBORDO

ALPHA ONE GEN II STD & COUNTER ROTATION

Ref.	R.O. OEM
REC26-816575A3	26-816575A3

Kit reparación
Gearcase seal kit
Kit riparazione

Ref.	R.O. OEM
REC11-52707Q1	11-52707Q1

Kit cierre hélice
Propeller nut kit
Kit chiussura elicha

Ref.	R.O. OEM
REC43-878087A2	43-878087A2

KIT PIÑON RODAMIENTO (13:21)
Incluye rodamiento REC31-30894A1 (1996+)
Pinion and forward gear set. Includes forward bearing REC31-30894A1 (1996+)
KIT PIGNONI (13:21)
Include cuscinetto REC31-30894A1 (1996+)

Ref.	R.O. OEM	
CM806105	806105Q1	Zn
CM806105A	806105Q1	Al

Ánodo eje hélice
Prop shaft anode
Anodo asse elica

Ref.	
CMALPHAKITA	Al
CMALPHAKITM	MG
TENKITALPHAONE/2	ZN

Kit ánodos
Anode kit
Kit anodi

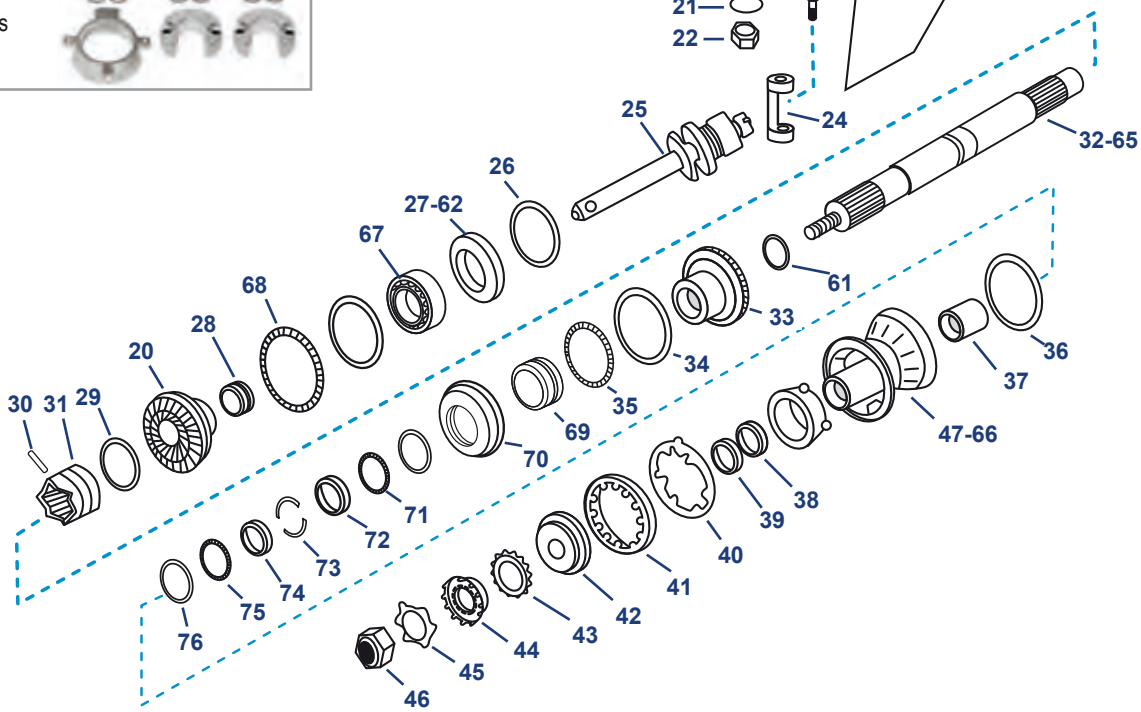

Nº	Ref.	R.O. OEM	Descripción	Description	Descrizione
1	**REC25-21836**	25-21836	ARO TÓRICO	O-RING	FASCE
2	**REC26-816575A2**	26-816575A2	RETÉN GOMA	SEAL	TENUTA
3	**REC47-43026Q02**	47-43026Q02	IMPULSOR	IMPELLER	GIRANTE
4	**REC27-8172771**	27-8172771	JUNTA	GASKET	GUARNIZIONE
5	**REC8172761**	8172761	TAPA BOMBA AGUA	PUMP CAP	COPERCHIO POMPA
6	**REC27-430331**	27-430331	JUNTA	GASKEET	GUARNIZIONE
7	**REC25-90011**	25-90011	ARO TÓRICO	O-RING	ANELLO
8	**REC26-66302**	26-66302	RETÉN ACEITE (-0M400411)	OIL SEAL (-0M400411)	PARAOLIO (-0M400411)
9	**REC26-864319**	26-864319	RETÉN ACEITE (0M400411+)	OIL SEAL (0M400411+)	PARAOLIO (0M400411+)
10	**REC8245191**	8245191	RETENEDOR	SEAL	TENUTA
11	**REC31-36387A1**	31-36387A1	RODAMIENTO	BEARING	CUSCINETTO
11	**REC31-33138A1**	31-33138A1	RODAMIENTO (1998+)	BEARING (1998+)	CUSCINETTO (1998+)
12	**REC15-42637A1**	15-42637A1	GRUESO	SHIM	SPESSORE
13	**REC45-816919**	45-816919	EJE TRANSMISIÓN (-999999)	SHAFT (-999999)	ASSE (-999999)
13	**REC45-853648**	45-853648	EJE TRANSMISIÓN (OL100040+)	SHAFT (OL100040+)	ASSE (OL100040+)
14	**REC26-8164641**	26-816464-1	RETÉN ACEITE	OIL SEAL	PARAOLIO
15	**REC25-36318**	25-36318	ARO TÓRICO	O-RING	ANELLO
16	**REC26-455771**	26-45577-1	RETÉN	SEAL	TENUTA
17	**REC12-191833**	12-191833	JUNTA TAPÓN	CAP GASKET	GUARNIZIONE TAPPO
18	**REC22-67892A05**	8M0058389	TAPÓN	CAP	TAPPO
19	**REC387817**	31-42647A1	RODAMIENTO	BEARING	CUSCINETTO
20	**REC43-878087A2**	43-878087A2	KIT PIÑONES (1996+) 13:21 1.47, 1.62, 1.81, 1.94 Ratio 3.265 OD Avante	PINION SET(1996) 13:21 1.47, 1.62, 1.81, 1.94 Ratio 3.265 OD Forward bearing	KIT PIGNONE (1996) 13:21 1.47, 1.62, 1.81, 1.94 Rapporto 3.265 OD Avanti
20	**REC43-878617A2**	43-853592A2	KIT PIÑONES (1998+) 2.00:1 / 2.40:1 3.265 OD Avante	PINION SET (1998+) 2.00:1 / 2.40:1 3.265 OD Forward bearing	KIT PIGNONE (1998+) 2.00:1 / 2.40:1 3.265 OD Avanti
21	**REC350038**	12-92721	JUNTA	GASKET	GUARNIZIONE
22	**REC11-35921**	11-35921	TUERCA	NUT	DADO
23	**CM762145**	76214Q5	ÁNODO ZINC	ANODE ZINC	ANODO ZINCO
23	**CM762145A**	76214Q5	ÁNODO ALUMINIO	ANODE ALUMINIUM	ANODO ALLUMINIO
24	**REC76865**	76865	HORQUILLA CAMBIO	CLIP	CLIP
25	**REC818349T1**	818349T1	EJE DESPLAZABLE	SHAFT	ASSE
26	**REC15-47397A1**	15-47397A1	GRUESO (1991-95)	SHIM (1991-95)	SPESSORE (1991-95)
26	**REC15-44491A1**	15-44491A1	GRUESO (1996+)	SHIM (1996+)	SPESSORE (1996+)
27	**REC31-828437A2**	31-828437A2	COJINETE Ø 44,45- 88,9 mm	BEARING Ø 44,45 - 88,9 mm	CUSCINETTO Ø44,45 - 88,9 mm
27	**REC31-35928T1**	31-35928T1	COJINETE Ø 47,62- 88,9 mm	BEARING Ø 47,62- 88,9 mm	CUSCINETTO Ø 47,62- 88,9 mm
27	**REC31-30894A1**	31-30894A1	COJINETE Ø 44,45-82,93 mm	BEARING Ø 44,45-82,93 mm	CUSCINETTO Ø 44,45-82,93 mm
27	**REC31-828439A2**	31-828439A2	COJINETE Ø 47,62- 82,93 mm	BEARING Ø 47,62- 82,93 mm	CUSCINETTO Ø 47,62- 82,93 mm
28	**REC31-30895T**	31-30895T	RODAMIENTO STD	BEARING STD	CUSCINETTO STD
28	**REC31-15844**	31-15844	RODAMIENTO CONTRAROTACIÓN	BEARING COUNTER ROTATION	CUSCINETTO CONTRO ROTANTE
29	**REC24-30893**	24-30893	MUELLE	SPRING	MOLLA
30	**REC17-8M0084681**	8M0020941	PASADOR	PIN	SPINOTTO
31	**REC52-853594T**	52-853594T	SELECTOR	GEAR	PIGNONE
32	**REC44-824110**	44-824110	EJE HÉLICE (91-97) (-999999)	SHAFT PROPELLER (91-97) (-999999)	ASSE ELICA (91-97) (-999999)
32	**REC44-850308**	44-850308	EJE HÉLICE (1998+) (OL100040+)	SHAFT PROPELLER (1998+) (OL100040+)	ASSE ELICA (1991-97) (OL100040+)
33	**REC43-828073A1**	43-828073A1	PIÑÓN MARCHA ATRÁS STD	GEAR REVERSE STD	PIGNONE MARCIA INDIETRO STD
34	**REC681001**	681001	ARO	RING	ANELLO
35	**REC30-88957T**	30-88957T1	RODAMIENTO STD	BEARING STD	CUSCINETTO STD
36	**REC25-31534**	25-31534	ARO TÓRICO	O-RING	FASCE
37	**REC387247**	31-30956T	RODAMIENTO	BEARING	CUSCINETTO
38	**REC26-76868**	26-14077	RETÉN ACEITE Interior	OIL SEAL Inside	PARAOLIO interno
39	**REC26-12224**	26-12224	RETÉN ACEITE Extrior	OIL SEAL Outside	PARAOLIO esterno
40	**REC14-18323**	14-18323	TAPA	CAP	COPERCHIO
41	**REC8M2011027**	8M2011027	TUERCA	NUT	DADO
42	**REC12-835467Q01**	12-835467Q01	SEPARADOR	SPACER	DISTANZIALE
43	**REC13-423511**	13-423511	CIERRE	CLIP	CHIUSURA
44	**REC12-31211Q03**	12-31211A2	TOPE CIERRE HÉLICE	END CLIP	TAPPO CHIUSURA ELICA
45	**REC90508-ZW1-003**	14-816629Q	CIERRE	CLIP	CHIUSURA
46	**REC90301-ZW1-003**	11-827614	TUERCA	NUT	DADO
47	**REC818763A10**	818763A10	COJINETE COLA STD	BEARING STD	CUSCINETTO STD
48	**REC815919A1**	815919A1	EJE CAMBIO	DRIVE SHAFT	ASSE
49	**REC23-67370**	23-67370	LEVA	CAM	BOCCOLA
50	**REC28-8M0032833**	28-8M0032833	CHAVETA	CLIP	CHIAVE
51	**REC807929A1**	807929A1	PORTA RETÉN (1991+)	SEAL BASE (1991+)	BASE TENUTA (1991+)
52	**REC23-815921A21**	23-815921A21	CASQUILLO	SHIFT BUSHING	BOCCOLA
54	**REC816597A1**	816597A1	TUBO AGUA	TUBE	TUBO
55	**REC23-816583**	23-816583	TUBO	TUBE	TUBO
56	**REC1623-815822A30**	1623-815822A30	CARCASA COLA (OD469859-999999)	HOUSING (OD469859-999999)	CARCASSA (OD469859-999999)
57	**RM817275A1**	817275A1	TAPA BOMBA AGUA	CAP WATER PUMP	COPERCHIO POMPA ACQUA
58	**REC10-816928**	10-816928	TORNILLO	BOLT	VITE
59	**REC10-806327**	10-806327	TORNILLO	BOLT	VITE
60	**REC53-29641**	53-29641	CIERRE	CIRCLIP	CIRCLIP
61	**REC23-824108**	23-824108	SUPLEMENTO	SHIM	SPESSORE
62	**REC828830A2**	828830A2	COJINETE ADAPTADOR CONTRA ROTACIÓN	BEARING ADAPTOR COUNTER ROTATION ASSY	CUSCINETTO ADATTATORE CONTRO ROTANTE
65	**REC44-8146061**	814606 1	EJE CONTRA ROTACIÓN (1991-95)	PROPSHAFT COUNTER ROTATION (1991-95)	ASSE CONTRO ROTANTE (1991-95)
66	**REC14587A7**	14587A5	COJINETE CONTRA ROTACIÓN (1991-95)	BEARING CARRIER COUNTER ROT. (1991-95)	CUSCINETTO CONTRO ROT.(1991-95)
67	**REC31-814653T**	31-814653	COJINETE CONTRA ROTACIÓN	BEARING CARRIER COUNTER ROTATION	CUSCINETTO CONTRO ROTANTE
68	**REC31-815480**	31-815480	COJINETE ALPHA (1996+) CONTRA ROT.	BEARING ALPHA (1996+) COUNTER ROT.	CUSCINETTO ALPHA (1996+) CONTRO ROTANTE
69	**REC31-814653T**	31-814653	ARANDELA CONTRA ROTACIÓN	WASHER COUNTER ROTATION	RONDELLA CONTRO ROTANTE
70	**REC814604T1**	814604A1	RODAMIENTO CONTRA ROTACIÓN	BEARING COUNTER ROTATION	CUSCINETTO CONTRO ROTANTE
71	**REC31-15842**	31-15842	COJINETE RODILLOS CONTRA ROTACIÓN	NEEDLE BEARING COUNTER ROTATION	CUSCINETTO CONTRO ROTANTE
72		815570	TOPE EJE CONTRA ROTACIÓN	THRUST WASHERS PROPSHAFT COUNTER ROTATION	ANELLO FINE CORSA CONTRO ROT.
73	**REC814605**	814605	CIERRE CONTRA ROTACIÓN	KEEPERS PROPSHAFT COUNTER ROT.	CHIUSURA CONTRO ROTANTE
74		815570	TOPE EJE CONTRA ROTACIÓN	THRUST WASHERS PROPSHAFT COUNTER ROTATION	ANELLO FINE CORSA CONTRO ROTANTE
75	**REC31-15842**	31-15842	COJINETE RODILLOS CONTRA ROTACIÓN	NEEDLE BEARING COUNTER ROTATION	CUSCINETTO CONTRO ROTANTE
76	**REC12-18448**	12-18448	ARANDELA CIERRE CONTRA ROTACIÓN	WASHER CLOSURE COUNTER ROT.	RONDELLA CHIUSURA CONTRO ROT.
77	**REC821526001**	861526001	RETÉN DE GOMA	RUBBER SEAL	PARAOLIO IN GOMMA

BRAVO

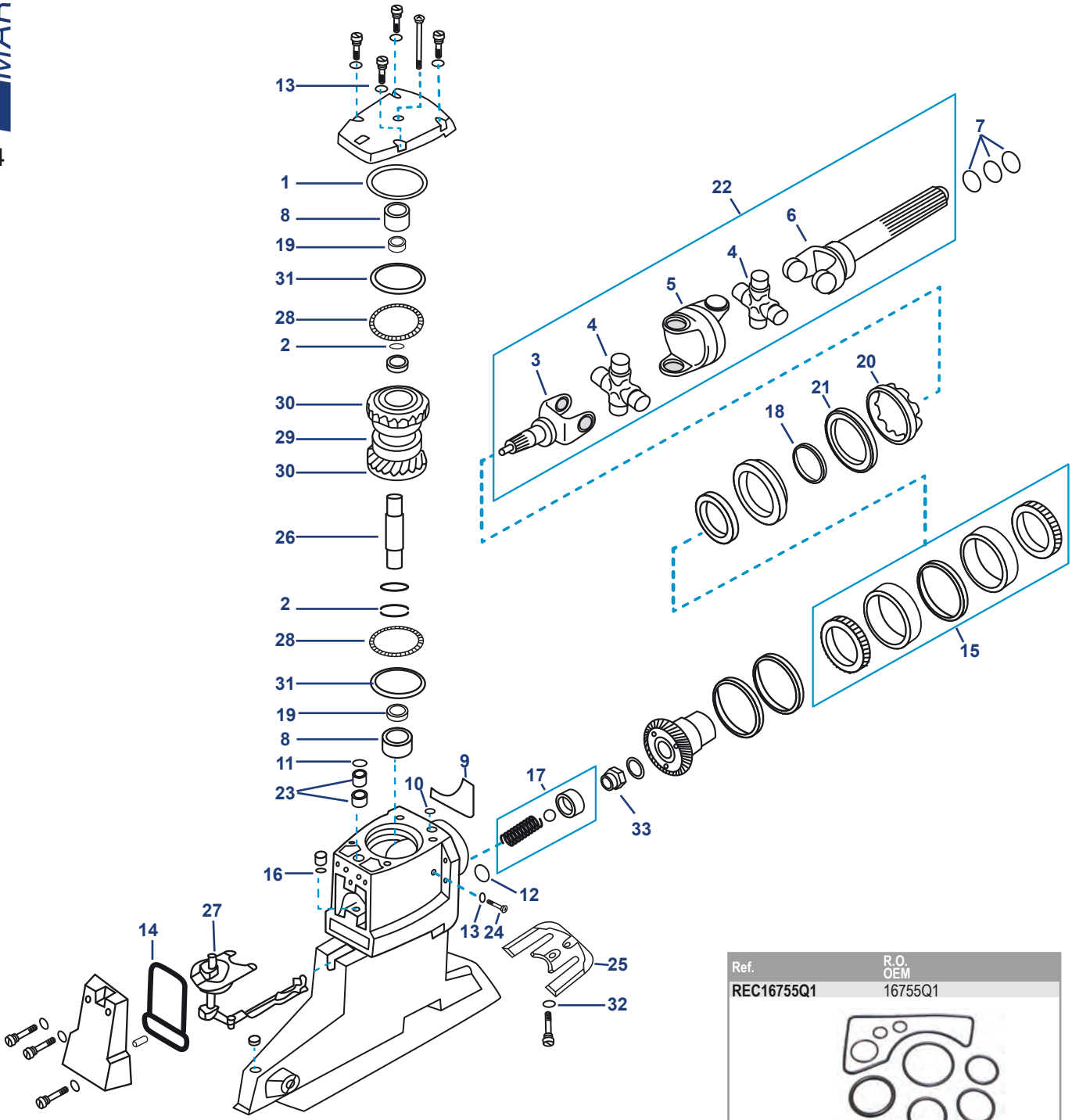

Ref.	R.O. OEM
REC16755Q1	16755Q1

Kit retenes
Gearcase seal kit
Kit tenute

Ref.	R.O. OEM
REC23-861209A1	23-861209A1

Kit retenes BRAVO
Shift shaft busing BRAVO
Kit tenutes BRAVO

Ref.	R.O. OEM
REC87580	

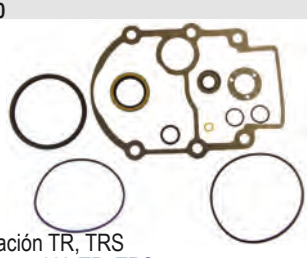

Kit reparación TR, TRS
Gearcase seal kit TR, TRS
Kit riparazione TR, TRS

Ref.	R.O. OEM
REC26-16709A2	26-16709A2

Kit reparación BRAVO I, II, III
Gearcase seal kit BRAVO I, II, III
Kit riparazione BRAVO I, II, III

Nº	Ref.	R.O. OEM	Descripción	Description	Descrizione
1	**REC25-97387**	25-97387	ARO TÓRICO	O-RING	ANELLO
2	**RM97351**	97351	RETENEDOR	RETAINER	TENUTA
3	**REC12784**	12784	UNIÓN COLA-CARDAN	YOKE	ASSE PIEDE-CARDANO
4	**REC3850812**	75832	CRUCETA	U-JOINT	CROCETTA
4	**RM866136A01**	866136A01	CRUCETA (OM750175+) GKN	U-JOINT (OM750175+) GNK	CROCETTA (OM750175+) GNK
4	**REC862132T**	862132T	CRUCETA BRAVO X, XR, XZ	U-JOINT BRAVO X, XR, XZ	CROCETTA BRAVO X, XR, XZ
4	**REC865496A02**	865496A01	CRUCETA BRAVO (0M111208+)	U-JOINT BRAVO (0M111208+)	CROCETTA BRAVO (0M111208+)
5	**REC393831**	393831	CARDÁN (-0M111207)	SOCKET (-0M111207)	CARDANO (-0M111207)
6	**REC59830A7**	814819A3	UNIÓN COLA MOTOR	YOKE ASSY	ASSE PIEDE
7	**REC25-29845**	25-29845	ARO TÓRICO (.924 x 1.03)	O-RING (.924 x 1.03)	ANELLO (.924 x 1.03)
7	**REC25-35027**	25-35027	ARO TÓRICO (1.046)	O-RING (1.046)	ANELLO (1.046)
8	**REC31-815900**	31-815900	COJINETE	BEARING	CUSCINETTO
9	**REC86310**	16755Q1	RETÉN	REATINER	TENUTA
10	**REC25-62706**	25-62706	ARO TÓRICO (.426 x 0.70)	O-RING (.426 x 0.70)	ANELLO (.426 x 0.70)
11	**REC25-62705**	25-62705	ARO TÓRICO	O-RING	ANELLO
12	**REC25-457101**	25-457101	ARO TÓRICO (1.424 x 103)	O-RING (1.424 x 103)	ANELLO (1.424 x 103)
13	**REC12-191833**	12-191833	JUNTA	GASKET	GUARNIZIONE
14	**REC12708**	12708	RETÉN	RETAINER	TENUTA
15	**REC31-86763A2**	31-86763A2	RODAMIENTO (- OM198372)	BEARING (-OM198372)	CUSCINETTO (-OM198372)
15	**RM31-86763A04**	31-86763A04	RODAMIENTO (OM198373+)	BEARING (OM198373+)	CUSCINETTO (-OM198373+)
16	**REC26-12709**	26-127091	RETÉN ACEITE	OIL SEAL	PARAOLIO
17	**REC24-17997A1**	24-17997A1	JUEGO MUELLE	SPRING SET	KIT MOLLA
18	**REC26-807006**	26-807006	RETÉN ACEITE	OIL SEAL	PARAOLIO
19	**REC31-87156**	31-87156	COJINETE	BEARING	CUSCINETTO
20	**RM11-92004**	11-92004	TUERCA	NUT	DADO
21	**REC86779A1**	86779A1	PORTA RETÉN	RING	ANELLO
22	**REC864244A2**	864244A2	KIT TRANSMISIÓN BRAVO (0B664190+) (1985-05)	U-JOINT ASSEMBLY BRAVO (0B664190+) (1985-05)	KIT TRASMISSIONE BRAVO (0B664190+) (1985-05)
22	**RM865425A03**	865425A03	KIT TRANSMISIÓN COLAS BRAVO X, XR, XZ	U-JOINT ASSEMBLY BRAVO X, XR, XZ	KIT TRASMISSIONE BRAVO X, XR, XZ
23	**REC23-861209A1**	23-861209A1	RETÉN	RETAINER	TENUTA
24	**REC22-67892A05**	8M0058389	TORNILLO	SCREW	VITE
25	**CM821630**	821630Q1	ÁNODO ZINC	ANODE ZINC	ANODO ZINCO
25	**CM821630A**	821630Q1	ÁNODO ALUMINIO	ANODE ALLUMINIUM	ANODO ALLUMINIO
26	**RM45-812773T**	45-812773	EJE TRANSMISIÓN	DRIVE SHAFT	ASSE
27	**REC12711**	12711	EJE SELECTOR	SHAFT	ASSE SELETTORE
28	**REC31-86771**	31-86771	COJINETE	BEARING	CUSCINETTO
29	**RM52-865344A01**	52-865344A01	CURSOR	CLUTCH	CURSORE
30	**RM43-887906A1**	43-887906A1	KIT PIÑONES (29/27) BRAVO I. 1.36:1 BRAVO II. 1.50:1 Y 1.81:1 BRAVO III.1.36:1 Y 1.81:1	BEARING KIT (29/27) BRAVO I. 1.36:1 BRAVO II. 1.50:1 & 1.81:1 BRAVO III.1.36:1 & 1.81:1	KIT PIGNONE (29/27) BRAVO I. 1.36:1 BRAVO II. 1.50:1 E 1.81:1 BRAVO III.1.36:1 E 1.81:1
30	**RM43-887903A1**	43-887903A1	KIT PIÑONES (32/27) BRAVO I. 1.50:1 BRAVO II. 1.65:1 Y 2.00:1 BRAVO III. 1.65:1 Y 2.00:1	BEARING KIT (32/27) BRAVO I. 1.50:1 BRAVO II. 1.65:1 & 2.00:1 BRAVO III.1.65:1 & 2.00:1	KIT PIGNONE (32/27) BRAVO I. 1.50:1 BRAVO II. 1.65:1 E 2.00:1 BRAVO III.1.65:1 E 2.00:1
30	**RM43-887909A1**	43-887909A1	KIT PIÑONES (30/23) BRAVO I. 1.65:1 BRAVO II. 2.20:1 BRAVO III. 2.20:1 Y 2.43:1	BEARING KIT (30/23) BRAVO I. 1.65:1 BRAVO II. 2.20:1 BRAVO III. 2.20:1 & 2.43:1	KIT PIGNONE (30/23) BRAVO I. 1.65:1 BRAVO II. 2.20:1 BRAVO III. 2.20:1 E 2.43:1
31	**RM23-87560091**	23-87560091	GRUESO. 091 ROJO	SHIM. 091 RED	SPESSORE. 091 ROSSO
31	**RM23-87560094**	23-87560094	GRUESO. 094 AZUL	SHIM. 094 BLUE	SPESSORE. 094 BLU
31	**RM23-87560097**	23-87560097	GRUESO. 097 VERDE	SHIM. 097 GREEN	SPESSORE. 097 VERDE
32	**REC13-35048**	13-35048	ARANDELA	WASHER	RONDELLA
33	**REC11-22339**	11-22339	TUERCA	NUT	DADO

BRAVO I

Ref.	R.O. OEM
REC26-76868A04	26-76868A04

Kit reparación BRAVO I, II, III
Gearcase seal kit BRAVO I, II, III
Kit riparazione BRAVO I, II, III

Ref.	
CM806188	
CM806188A	Al

Ánodo
Anode
Anodo

Ref.	
CMBRAVO1KITA	Al
CMBRAVO1KITM	MG
TENKITBRAVOI	ZN

Ánodo
Anode
Anodo

Ref.	R.O. OEM
REC11-52707Q1	11-52707Q1

Kit cierre hélice
Propeller nut kit
Kit chiusura elica

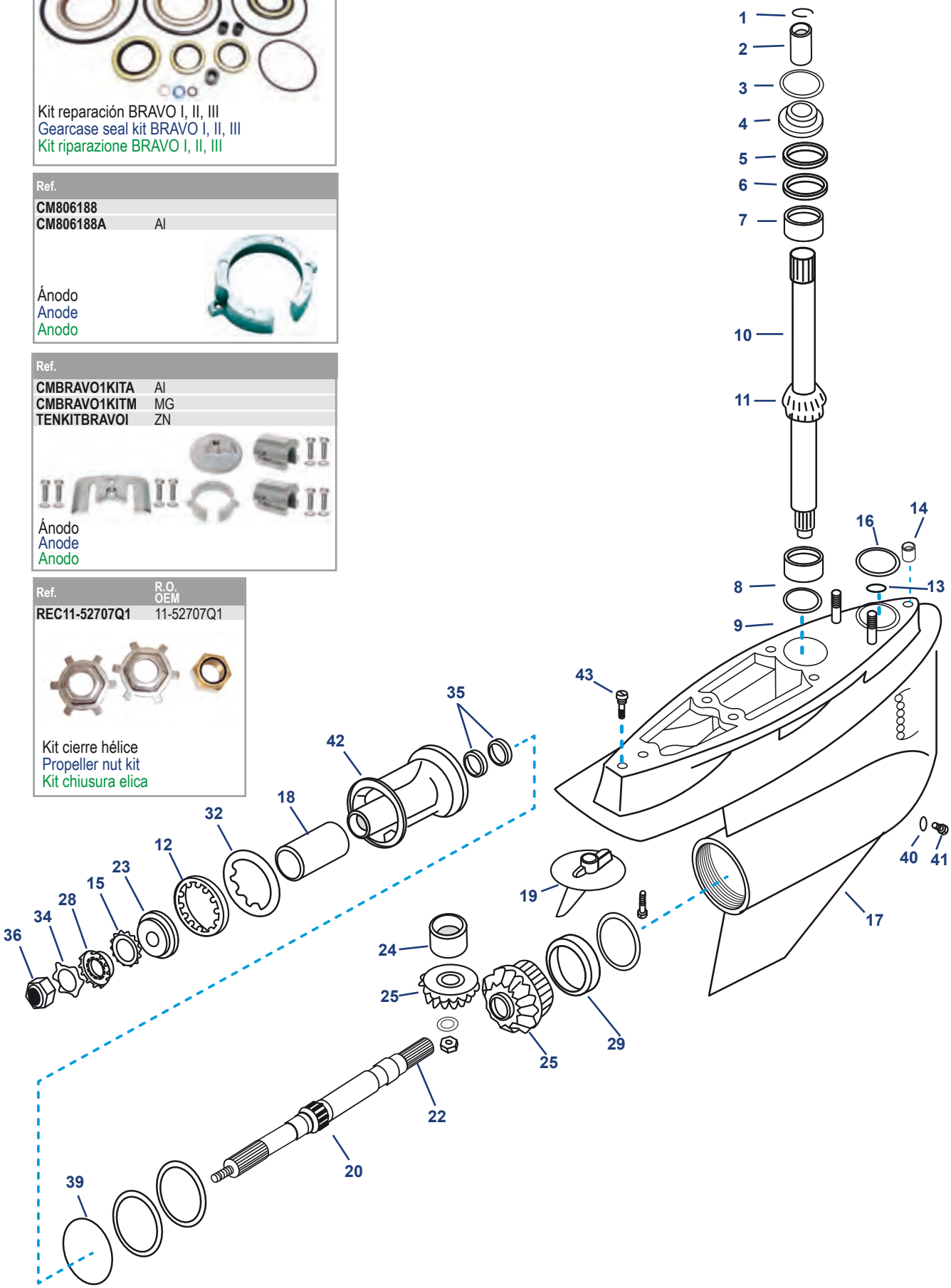

Nº	Ref.	R.O. OEM	Descripción	Description	Descrizione
1	REC53-88242	53-88242	CLIP	CLIP	CLIP
2	REC88243A3	88243A3	ACOPLE	COUPLING ASSEMBLY	ASSE ACCOPPIAMENTO
3	REC308627	25-20826	ARO TÓRICO	O-RING	ANELLO
4	REC23-8M8000506	23-92916	ESPACIADOR	SPACER	DISTANZIALE
5	REC15-86749A1	15-86749A1	KIT SUPLEMENTOS	SHIM KIT	KIT SPESSORE
6	RM86739	14-86739	ARANDELA	WASHER	RONDELLA
7	REC31-86748A1	31-86748A1	COJINETE	BEARING	CUSCINETTO
8	REC31-66668A1	66668A1 31-99328A1	COJINETE	BEARING	CUSCINETTO
9	REC15-92914A1	15-92914A1	KIT GRUESOS	SHIM KIT	KIT SPESSORE
10	RM45-41629A2	41629A2	EJE TRANSMISIÓN	DRIVESHAFT	ASSE TRASMISSIONE
11	REC31-86748A1	31-86748A1	COJINETE	BEARING	CUSCINETTO
12	REC8M2011027	8M2011027	TUERCA	NUT	DADO
13	REC25-33465	25-33465 25-822370	ARO TÓRICO (2.362 x .103)	O-RING (2.362 x .103)	ANELLO (2.362 x .103)
14	REC26-36556	26-36556	TUBO AGUA Ø EXT. 12.7 mm	WATER TUBE Ø EXT. 12.7mm	TUBO ACQUA Ø EXT. 12.7 mm
14	REC26-805344	26-805344	TUBO AGUA Ø EXT. 15.88 mm	WATER TUBE Ø EXT. 15.88 mm	TUBO ACQUA Ø EXT. 15.88 mm
15	REC13-423511	13-42351-1	CIERRE	LOCK	CHIUSURA
16	REC26-455771	26-455771	RETÉN	SEAL	TENUTA
17	RM1656-8866A17	8866A64	CARCASA COLA (1656-8863CZ)	LOWER CASE (1656-8863CZ)	CARCASSA PIEDE (1656-8863CZ)
18	REC31-54042T	31-54042T	COJINETE	BEARING	CUSCINETTO
19	CM762145	76214Q5	ÁNODO ZINC	ZINC ANODE	ANODO ZINCO
19	CM762145A	76514Q5	ÁNODO ALUMINIO	ALUMINIUM ANODE	ANODO ALLUMINIO
20	REC31-66668A1	66668A1 31-99328A1	COJINETE	BEARING	CUSCINETTO
22	RM44-41630T	44-850308 44-41630T	EJE HÉLICE	PROPSHAFT	ASSE ELICA
23	REC12-835467Q01	12-835467Q01	TOPE HÉLICE	SEPARATOR	FERMO PER ELICA
24	REC31-86754T	31-86754T	COJINETE	BEARING	CUSCINETTO
25	RM43-14063A1	43-14063A1	KIT PIÑONES (15/19)	BEARING SET (15/19)	KIT CUSCINETTO (15/19)
28	REC12-31211Q03	12-31211Q03	TOPE CIERRE HÉLICE	WASHER	TAPPO CHIUSURA ELICA
29	REC31-86752A1	31-86752A1	COJINETE	BEARING	CUSCINETTO
32	REC14-18323	14-18323	ARANDELA	WASHER	RONDELLA
34	REC90508-ZW1-003	14-816629Q	ARANDELA CIERRE	LOCK WASHER	RONDELLA CHIUSURA
35	REC26-76868	26-76868	RETÉN ACEITE	OIL SEAL	PARAOLIO
36	REC90301-ZW1-003	11-827614	TUERCA CIERRE HÉLICE	LCOK NUT	DADO CHIUSURA
39	REC25-31534	25-31534	ARO TÓRICO	O-RING	ANELLO
40	REC12-191833	12-191833	JUNTA	GASKET	GUARNIZIONE
41	REC22-67892A05	8M0058389	TORNILLO DRENAJE	DRAIN PLUG	VITE DRENAGGIO
42	REC41641A8	41641A8	COJINETE COLA	BEARING	CUSCINETTO
43	REC10-806327	10-806327	TORNILLO	SCREW	VITE

PARTE INFERIOR COMPLETA
COMPLETE GEAR HOUSING ASSEMBLY
PARTE INFERIORE COMPLETA

Ref.	R.O. OEM	ENTRADAS DE AGUA WATER INTAKE PRESA D'ACQUA
REC1656-8866A55	1656-8866A55 1656-8866A10	1
REC1656-8866A63	1656-8866A63 1656-8866A15	2

BRAVO II

Ref.	
CMBRAVO2Y3KITA	Al
CMBRAVO2Y3KITM	MG
TENKITBRAVOII-III	ZN

Ánodo
Anode
Anodo

Ref.	
CM806188	
CM806188A	Al

Ánodo
Anode
Anodo

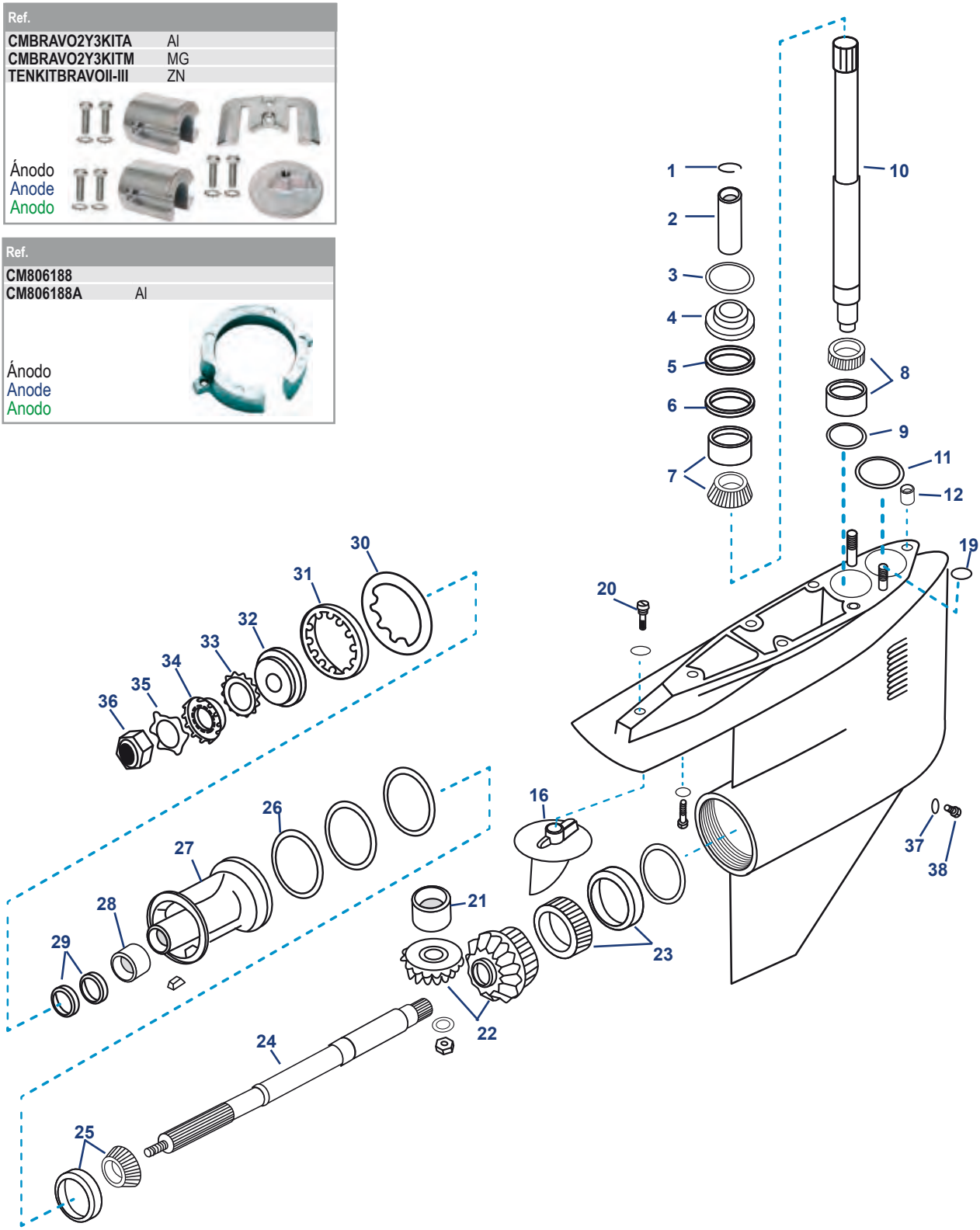

Ref.	R.O. OEM
REC11-52707Q1	11-52707Q1

Kit cierre hélice
Propeller nut kit
Kit chiusura elica

Ref.	R.O. OEM
REC26-76868A04	26-76868A04

Kit reparación BRAVO I, II, III
Gearcase seal kit BRAVO I, II, III
Kit riparazione BRAVO I, II, III

Nº	Ref.	R.O. OEM	Descripción	Description	Descrizione
1	**REC53-88242**	53-88242	CLIP	CLIP	CLIP
2	**REC88243A3**	88243A3	ACOPLE	COUPLING ASSEMBLY	ACCOPPIAMENTO
3	**REC308627**	25-20826	ARO TÓRICO	O-RING	ANELLO
4	**REC23-8M8000506**	92916	ESPACIADOR	SPACER	DISTANZIALE
5	**REC15-86749A1**	15-86749A1	KIT GRUESOS	SHIM KIT	KIT SPESSORE
6	**RM86739**	14-86739	ARANDELA	WASHER	RONDELLA
7	**REC31-86748A1**	31-86748A1	COJINETE	BEARING	CUSCINETTO
8	**REC31-66668A1**	31-66668A1	COJINETE	BEARING	CUSCINETTO
9	**REC15-92914A1**	15-92914A1	KIT GRUESOS	SHIM KIT	KIT SPESSORE
10	**RM45-41629A2**	45-41629A2	EJE	DRIVESHAFT	ASSE
11	**REC25-33465**	25-822370	ARO	O-RING	ANELLO
12	**REC26-805344**	26-805344	RETÉN AGUA Ø15.88 mm	SPEEDOMETER SEA Ø15.88 mm	TENUTA ACQUA Ø15.88 mm
12	**REC26-36556**	26-36556	RETÉN AGUA Ø 12.7 mm	SPEEDO GROMMET Ø 12.7 mm	TENUTA ACQUA Ø 12.7 mm
16	**CM762144**	76214A2	ÁNODO ZINC	ZINC ANODE	ANODO ZINCO
16	**CM762144A**	76214A2	ÁNODO ALUMINIO	ANODE ALLUMINIUM	ANODO ALUMINIO
19	**REC26-455771**	26-455771	RETÉN	SEAL	PARAOLIO
20	**REC10-806327**	10-806327	TORNILLO ANODO	ANODE SCREW	VITE ANODO
21	**REC31-86754T**	31-86754T	COJINETE	BEARING	CUSCINETTO
22	**RM43-14063A1**	43-14063A1	KIT PIÑONES (15/19)	GEAR SET (15/19)	KIT PIGNONI (15/19)
23	**REC31-86752A1**	31-86752A1	COJINETE	BEARING	CUSCINETTO
24	**RM44-41630T**	44-41630T	EJE HÉLICE	PROP SHAFT	ASSE ELICA
25	**REC31-66668A1**	31-66668A1	COJINETE	BEARING	CUSCINETTO
26	**REC25-31534**	25-31534	TÓRICA	O-RING	TENUTA
27	**REC41641A8**	41641A8	COJINETE COLA	BEARING CARRIER	CUSCINETTO PIEDE
28	**REC31-54042T**	31-54042T	COJINETE	BEARING	CUSCINETTO
29	**REC26-76868**	26-76868	RETÉN	SEAL	PARAOLIO
30	**REC14-18323**	14-18323	ARANDELA	LOCK WASHER	RONDELLA
31	**REC8M2011027**	79448	TUERCA CIERRE COLA	LOCK NUT	RONDELLA CHIUSURA PIEDE
32	**REC12-835467Q01**	13171	TOPE HELICE	SEPARATOR	FERMO PER ELICA
33	**REC13-423511**	13-423511	CIERRE	LOCK WASHER	CHIUSURA
34	**REC12-31211Q03**	12-31211Q03	TOPE CIERRE HÉLICE	WASHER	TAPPO CHUSURA ELICA
35	**REC90508-ZW1-003**	14-816629Q	ARANDELA CIERRE	LOCK WASHER	RONDELLA CHIUSURA
36	**REC11-52707Q1**	11-827614	TUERCA CIERRE HÉLICE	LOCK NUT	DADO CHIUSURA
37	**REC12-191833**	12-191833	JUNTA	GASKET	GUARNIZIONE
38	**REC22-67892A05**	22-67892	TORNILLO CON RETÉN CIERRE	DRAINING SCREW SET	VITE CON PARAOLIO CHIUSURA

BRAVO III

Ref.	R.O. OEM
REC26-76868A04	26-76868A04

Kit reparación BRAVO I, II, III
Gearcase seal kit BRAVO I, II, III
Kit riparazione BRAVO I, II, III

Ref.	
CMPNDAF14UNS	Zn
CMPNDAF14UNSA	Al

Kit ánodo BRAVO III (-2003)
Anode kit BRAVO III (-2003)
Kit anodo BRAVO III (-2003)

Ref.	
CM806188	
CM806188A	Al

Ánodo
Anode
Anodo

Ref.	
CMBRAVO3KITA	Al
CMBRAVO3KITM	MG
TENKITBRAVOIII-04	ZN

Ánodo
Anode
Anodo

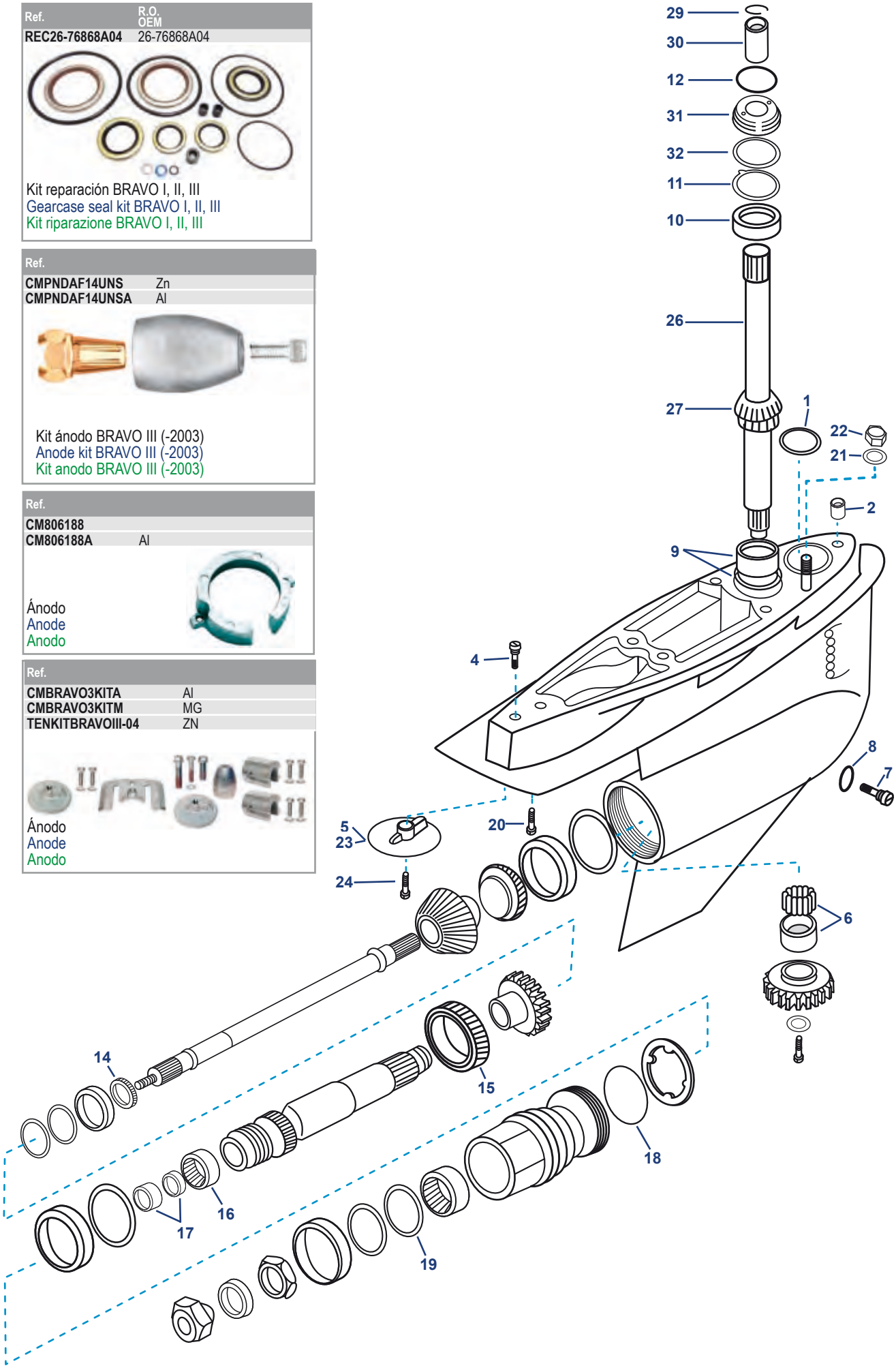

Nº	Ref.	R.O. OEM	Descripción	Description	Descrizione
1	**REC25-33465**	25-33465	ARO TÓRICO	O-RING	ANELLO
2	**REC26-805344**	26-805344	RETÉN	SEAL	TENUTA
3	**REC26-455771**	26-45577-1	RETÉN	SEAL	TENUTA
4	**REC10-806327**	10-806327	TORNILLO	SCREW	VITE
5	**CM762144**	76214Q5	ÁNODO	ANODE	ANODO
6	**RM86754T**	86754T	COJINETE	BEARING	CUSCINETTO
7	**REC22-67892A05**	22-8M0058389	TORNILLO CON RETÉN	DRAININ SCREW SET	VITE CON TENUTA
8	**REC12-191833**	12-19183-3	JUNTA	GASKET	GUARNIZIONE
9	**REC31-66668A1**	31-99328A1	COJINETE	BEARING	CUSCINETTO
10	**REC31-86748A1**	31-86748A1	COJINETE	BEARING	CUSCINETTO
11	**RM86739**	86739	ARANDELA	WASHER	RONDELLA
12	**REC308627**	25-20826	ARO TÓRICO	O-RING	ANELLO
13	**REC31-86752A1**	31-86752A1	COJINETE	BEARING	CUSCINETTO
14	**RM805322**	805322	COJINETE	BEARING	CUSCINETTO
15	**RM805182A1**	805182A1	COJINETE	BEARING	CUSCINETTO
16	**RM57410**	57410	COJINETE	BEARING	CUSCINETTO
17	**REC26-8M0033407**	26-8M0033407	RETÉN ACEITE	OIL SEAL	PARAOLIO
18	**REC3852865**	25-805331	ARO TÓRICO	O-RING	ANELLO
19	**REC26-861694**	26-861694	RETÉN ACEITE	OIL SEAL	PARAOLIO
20	**REC10-816601**	10-816601	TORNILLO	SCREW	VITE
21	**REC12-45176**	12-45176	ARANDELA	WASHER	RONDELLA
22	**REC11-34933**	11-859116	TUERCA	NUT	DADO
23	**CM762144A**	76214Q5	ÁNODO ALUMINIO DESIGN II	ALUMINIUM ANODE DESIGN II	ANODO ALLUMINIO DESIGN II
24	**REC313715**	10-865321	TORNILLO	SCREW	VITE
25	**RM44-865322T**	44-865322T	EJE	SHAFT	ASSE
26	**RM45-41629A2**	805370A1	EJE (16.085 largo)	DRIVESHAFT (16.085 long)	ASSE (16.085 lungo)
27	**REC31-86748A1**	31-86748A1	COJINETE	BEARING	CUSCINETTO
29	**REC53-88242**	53-88242	RETÉN	SEAL	TENUTA
30	**REC88243A3**	88243A3	ACOPLE	COUPLING	ACCOPPIAMENTO
31	**REC23-8M8000506**	23-92916	ESPACIADOR	SPACER	DISTANZIALE
32	**REC15-86749A1**	15-86749A1	KIT SUPLEMENTOS	SHIM KIT	SPESSORE KIT

HERRAMIENTAS
TOOLS
ATTREZZI

EXTRACTOR PIÑONES Y COJINETES
UNIVERSAL PULLER PLATE
ESTRATTORE PIGNONE E CUSCINETTI

RECmar®

Ref.	R.O. OEM	CAPACIDAD CAPACITY CAPACITÀ
REC91-37241	91-37241	75 - 105 mm 3" - 4 1/2"
REC91-00001		30 - 50 mm 1 1/4" x 2 1/4"
REC91-00002		50 - 75 mm 2 1/4" x 3 1/2"

EXTRACTOR COJINETES Y HÉLICES
PROP AND BEARING PULLER
ESTRATTORE CUSCINETTI E ELICHE

Ref.	R.O. OEM
REC90095	

Extractor de cojinetes y hélices, con patas. Para todos los cojinetes Mercruiser y la mayoría de las hélices.
Prop and bearing carrier puller. Capacity: 5 Tons (Min). For Mercruiser All Style Bearing Carrier and Most Props.
Estrattore cuscinetti e eliche. Per tutti i cuscinetti Mercruiser e la maggior parte delle eliche.

Para hélices y cojinetes antiguos
For prop and old style bearing carrier.
Per eliche e cuscinetti vecchi.

Para cojinetes modernos
For new style bearing carrier.
Per cuscinetti moderni.

KIT LLAVE HÉLICE
PROP WRENCH KIT
KIT CHIAVE ELICA

RECmar®

Ref.	R.O. OEM	TUERCA NUT DADO
REC91-859046Q4	91-859046Q4	1 1/16"

EXTRACTOR COJINETES
DRIVER BEARING
ESTRATTORE CUSCINETTI

NEW

Ref.	R.O. OEM
REC91-34569A1	91-34569A1

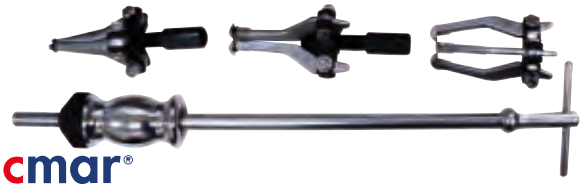

RECmar®

Ref.	R.O. OEM
REC91-36569T	91-36569T

MC-I, R-MR, Alpha One.

EXPANSOR DE FUELLES
BELLOWS EXPANDER TOOL
ATTREZZO PER CUFFIE

Ref.	R.O. OEM
REC91-45497A1	91-45497A1

Instala los fuelles de escape en las MC-1/MR/Alpha One/ Alpha One Gene II, Bravo y Blackhawk.
Installs exhaust bellows on MC-1/R/MR/Alpha One/Alpha One Gen II, Bravo, and Blackhawk drive units.
Compatibile con MC-1/MR/Alpha One/ Alpha One Gene II, Bravo e Blackhawk.

KIT HERRAMIENTAS TRABAJO COLAS
GEAR CASE TOOL KIT
KIT ATTREZZATURA PER LAVORAZIONI NEI PIEDI

Ref.	R.O. OEM
RM91-31229A7	91-31229A7

Kit de montaje y desmontaje de los retenes y cojinetes de las colas Alpha, Alpha Gene II y Bravo.
Removes and installs bearings in MC-I, R-MR, Alpha One, Alpha One Gen Two and Bravo.
Permette di smonare, cuscinetti, paraoli in tutti i piedi Meecruiser, Alpha, Alpha Gene II e Bravo.

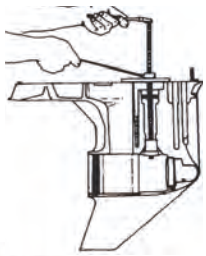

LLAVES PARA ELEMENTOS DEL CAMBIO
TOOLS FOR ELEMENTS TO DRIVESHAFT
CHIAVI PER GLI ELEMENTI DEL CAMBIO

Ref.	R.O. OEM
REC91-43579	91-43579

Llave montaje y desmontaje casquillo sujección tubo de agua. Para todas las colas Bravo I, II y III.
Drive shaft adapter. For all Bravo I, II & III drive units.
Chiave per smontare e montare la ghiera del tubo acqua. Per piedi Bravo I, II e III.

Ref.	R.O. OEM
RM91-17275A1	91-17275A1

Llave montaje retenes y casquillos eje cambio. Para todas las colas Bravo I, II y III.
Driveshaft shiming tool. For all Bravo I, II & III drive units.
Chiave per smontare paraolio e ghiera asse cambio. Per i piedi Bravo I, II e III.

Ref.	R.O. OEM
REC91-31107T	91-31107T

Llave tuerca varilla cambio. Para montaje y desmontaje de las tuercas de la varilla cambio en las colas MC-I, R-MR, Alpha One.
Shift shaft bushing tool. Removes and installs the shift shaft bushing in the gear case of MC-I, R-MR, and Alpha One, drive units.
Chiave dado asticella cambio. Per i piedi MC-I, R-MR, Alpha One.

Ref.	R.O. OEM
REC91-56775T	91-56775T

Llave estriado eje. Da una superficie de llave para girar el eje de cambio en las colas MC-I, R-MR, Alpha One y Alpha One Gen II
Drive shaft adapter. Provides a wrench surface to turn the drive shaft on MC-I; R-MR; Alpha One; and Alpha One, Gen Two drive units.
Chiave asse a millerighe. Permette di avere una superficie per poter girare l'asse del cambio nei piedi MC-I, R-MR, Alpha One e Alpha One Gen II.

Ref.	R.O. OEM
RM91-17273	91-17273

Llave montaje casquillos eje cambio. Para todas las colas Bravo I, II y III
Bushing removal tool. For all Bravo drive units
Chiave per montare ghiera asse cambio. Per tutti i piedi Bravo I, II e III.

Ref.	R.O. OEM
RM91-17302	91-17302

Llave extractora eje cambio. Para todas las colas Bravo I, II y III.
Shift handle tool. For all Bravo drive units.
Chiave estrattore asse cambio. Per tutti i piedi Bravo I, II e III.

Ref.	R.O. OEM
REC91-12037	91-12037

LLave cable cambio. Para montaje y desmontaje de los cables de cambio en las colas MC-I,R-MR, Alpha One,Gene II.
Shift cable tool. Installs and removes drive shaft bearing retainer on MC-1, R-MR, Blackhawk, all Bravo, and all Alpha drive units.
Chiave cavo cambio. Per installare e smontare i cavi cambio nei piedi MC-I,R-MR, Alpha One,Gene II.

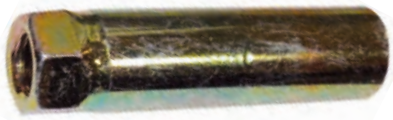

EXTRACTOR
PULLER ROD
ESTRATTORE

Ref.	R.O. OEM
REC91-31229	91-31229

Para utilizar con las herramientas REC91-43579 y REC91-36569T para instalar y desmontar el cojinete
Used with No. REC91-43579 & REC91-36569T tools to install & remove pinion bearing.
Per utilizzare con l'attrezzo REC91-43579 e REC91-36569T per installare e smontrare i cuscinetti

CENTRADOR MOTOR
ENGINE ALIGNMENT TOOL
CENTRATORE MOTORE

Ref.	R.O. OEM
REC91-805475A1	91-805475A1

Centra el motor y la cola durante la instalación
Aligns engine and drive unit during installation.
Centra il motore con il piede durante l'installazione

LLAVE ESTRIADO EJE
PROP SHAFT ADAPTOR
CHIAVE ASSE A MILLERIGHE

Ref.	R.O. OEM
REC91-61077T	91-61077T

Da una superficie de llave para girar el eje de la hélice en las colas MC-I, R-MR, TRS, Álpha One y Gene II y Bravo I
Provides a wrench surface to turn the propeller shaft on MC-I; R-MR; Alpha One; Alpha One, Gen Two; Bravo One; and TRS drive units.
Permette di avere una superficie per poter girare l'asse nei piedi MC-I, R-MR, TRS, Alpha One e Gene II e Bravo I.

LLAVES PARA FUELLES
TOOL TO TRANSOM BELLOWS
ATTREZZO PER TRANSON

Ref.	R.O. OEM
REC91-818162	91-818162

Transon Gen II y Bravo.

LLAVE TUERCA DIABOLO
BEARING CARRIER RETAINER WRENCH
CHIAVE POGNONE

Ref.	R.O. OEM
REC91-61069T	91-61069T

Instala y desinstala las tuercas del diabolo en las colas MC-I, R-MR, TRS, Alpha One y Gene II y Bravo I y II
Removes and installs bearing carrier retainer nuts on Bravo One and Two; MC-I; R-MR; and Alpha One, Gen. Two; and TRS; drive units.
Permette di installare e smontare il diavolo nei MC-I, R-MR, TRS, Alpha One y Gene II e Bravo I e II.

LLAVE TUERCA EJE VERTICAL
DRIVE SHAFT BEARING RETAINER WRENCH
CHIAVE PER DADO ASSE VERTICALE

Ref.	R.O. OEM
REC91-43506T	91-43506T

Para montaje y desmontaje del retenedor y cojinete superior en colas Alpha y fuerabordas.
Removes and installs threaded bearing retainer on Alpha stern drives.
Per montare e smontare il fermo ed il cuscinetto superiore nei piedi Alpha e fuoribordo.

Ref.	R.O. OEM
REC91-61067A04	91-61067A04

Incluye un adaptador eje REC91-56775T. Sostiene la tuerca del piñón cuando se está sacando el piñón y el eje en las colas MC-I, R-MR, Alpha One.
Holds pinion nut when removing pinion gear and drive shaft on MC-I, R-MR, and Alpha One drive units. Comes with one REC91-56775T drive shaft adaptor.
Include un adattatore per asse REC91-56775T. Per i piedi MC-I, R-MR, Alpha One.

LLAVE TUERCA CARDAN
BEARING RETAINER WRENCH
CHIAVE CARDANO

Ref.	R.O. OEM
REC91-17256	91-17256

Para montaje y desmontaje de la tuerca del cardan en todas las colas MC-I, R-MR, Blackhawk, Alpha y Bravo.
Installs and removes drive shaft bearing retainer on MC-1, R-MR, Blackhawk, all Bravo, and all Alpha drive units.
Per installare e smontare il cardano nei piedi MC-I, R-MR, Blackhawk, Alpha e Bravo.

Ref.	R.O. OEM
REC90490	91-17257T 91-8053741

Para montaje y desmontaje de la tuerca del cardan en las colas Bravo II y Bravo III.
Installs and removes bearing carrier retainer nuts on Bravo II & Bravo III sterndrive units.
Per smontare il cardano nei piedi Bravo II e III.

LLAVE TORNILLO LATERAL TRANSOM
HINGE PIN TOOL
CHIAVE VITE LATERALE TRANSOM

Ref.	R.O. OEM
REC91-78310	91-78310

Instala y desinstala los tornillos laterales de las colas.
Removes and installs hinge pins from drive units.
Per tutti i piedi Mercruiser.

LLAVE GALGADO PIÑONES
PINION GEAR SHIMMING TOOL
CHIAVE INSTALLAZIONE PIGNONI

Ref.	R.O. OEM
REC91-56048001	91-56048001

Mide la altura del piñón en las colas MC-I, R-MR, Alpha One y Gene II
Measures pinion height of MC-I; R-MR; Alpha One; and Alpha One, Gen Two drive units.
Misura l'altezza dei pignoni nei piedi MC-I, R-MR, Alpha One e Gene II.

Ref.	R.O. OEM
REC91-60523	91-60523
REC91-60526T	91-60526T

Mide la distancia de los piñones en la parte superior en las colas MC-I, R-MR, Alpha One y Gene II.
Measures upper drive gear clearance on MC-I; R-MR; Alpha One; and Alpha one, Gen Two drive units.
Misura la distanza dei pignoni della parte alta nei piedi MC-I, R-MR, Alpha OneGene II.

REC91-60523

REC91-60526T

PISTOLA DE ACEITE
BOTTLE GREASE PUMP
PISTOLA OLIO

Ref.	R.O. OEM
REC55005	91-850730Q01 91-8M0072133

Pistola para acoplar en los envases de botella de 1L LUB11552 y LUB11564U12. Se suministra con kit de adaptación con válvula antiretorno.
Lower unit quart pump. Complete with metal threaded filler fitting.
Pistola da usare con le bottiglie da 1L LUB11552 e LUB11564U12. Si vende con kit di accoppiamento con valvola anti-ritorno.

IMPULSORES Y KITS REPARACIÓN BOMBA
IMPELLERS & WATER PIMP SERVICE KIT
GIRANTI E KIT RICAMBI POMPA ACQUA

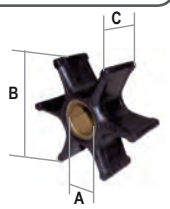

IMPULSORES
IMPELLERS
GIRANTI

	MOTORES ENGINES MOTORI	R.O. OEM	SHERWOOD	CEF	JOHNSON	JABSCO	RECMAR	MEDIDAS (mm) MEASURES (mm) MISURE (mm) A	B	C
1	Para motores CUMMINS con bomba SHERWOOD G2601 y G2603X. Impeller for Sherwood pump G2601 & 2603X. Per motori Cummins con pompa Sherwood G2601 e G2603X.	3972366	SHE26000K	CEF500183G				20	94,5	79,8
2	Diesel 7.3 l	47-853126 3349198 3916720	SHE15000K	CEF500167			**REC15000K**	16	65	51,2
3	MC-1/R/MR/Alpha One	47-89984T4		CEF500313G			**REC47-89984T4**	22,3	60	33,8
4	ALPHA GENE II	47-43026Q02		CEF500301			**REC47-43026Q02**	22,4	89	32,5
5	530DTA, 636DTA, D219, D183, D281, D4.2L	47-801332602		CEF500106GT	JOH09-1028B		**REC3841697**	14,29	65	50,2
6	BRAVO. Motores de Inyección. BRAVO. Injection engines BRAVO. Motori di iniezione	47-862232A2 47-8M0104229		CEF500159G			**REC47-862232A2**	11,4	66,5	50,6
7	HINO Diesel	47-809866T 47-831311350		CEF500161			**REC47-809866T**	14,29	65	68,2
8	D254, D3.6L, D4.2L	47-816814T		CEF500177GT		JAB17018-0001	**REC3593573**	14,29	65,2	75,65
9	BRAVO	47-59362Q01		CEF500109			**REC47-59362Q01**	16,85	66,5	50,6

1

2

3

Núcleo estriado
Fluted core.
Nucleo scanalato.

4

5

6

7

8

9

KITS REPARACIÓN BOMBA AGUA (1 / R / MR/ ALPHA ONE)
WATER PUMP SERVICE KITS (1 / R / MR/ ALPHA ONE)
KIT RICAMBI POMPA ACQUA (1 / R / MR/ ALPHA ONE)

Ref.	R.O. OEM
REC46-44292Q03	46-44292Q03

MOTORES / ENGINES / MOTORI
MR1 Alpha one (1984-90)

Ref.	R.O. OEM
REC46-48748T1	46-48748A1 2495186 2763441

MOTORES / ENGINES / MOTORI
MR1 Alpha one (1967-69)

Ref.	R.O. OEM
REC12120	46-96148A8

MOTORES / ENGINES / MOTORI
MR / ALPHA I (6225577+)

Ref.	R.O. OEM
REC46-48748T1	46-48748T1

MOTORES / ENGINES / MOTORI
MC-1 (1969+)

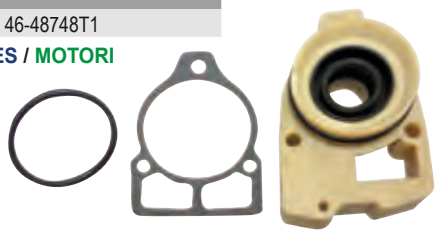

Ref.	R.O. OEM
REC12110	

MOTORES / ENGINES / MOTORI
Excepto / Except / Eccetto MR/ALPHA ONE
MC-1 (2791957-6225576)
(1970-83)

Ref.	R.O. OEM
RECMC00002	

MOTORES / ENGINES / MOTORI
MR & ALPHA ONE (622557+)
Kit completo / Full kit / Kit completo

Ref.	R.O. OEM
RECMC00001	

MOTORES / ENGINES / MOTORI
MC-1 (2663442-6225576)
Kit completo / Full kit / Kit completo

Ref.	R.O. OEM
REC46-64141A11	46-64141A11

MOTORES / ENGINES / MOTORI
MC-1 (2062141-2791956)

Ref.	R.O. OEM
REC46-96148A8	46-60367A1 46-96148A8 46-96148A5

Parte superior.
Upper water pump housing.
Parte superiore.
MC-1 & ALPHA-ONE

R.O. OEM			
324351	TAPA BOMBA	PUMP COVER	COPERCHIO POMPA
12-191833	JUNTA	GASKET	GUARNIZIONE
23-29804T	TUBO AGUA	WATER TUBE	TUBO ACQUA
25-30224Q	ARO	O-RING	ANELLO
25-30271	ARANDELA	WASHER	RONDELLA
25-30613	ARO	O-RING	ANELLO
25-33145	ARO	O-RING	ANELLO
25-90011	ARO	O-RING	ANELLO
26-455771	RETÉN	SEAL	TENUTA
27-32438	JUNTA	GASKET	GUARNIZIONE
27-426311	JUNTA	GASKET	GUARNIZIONE
27-856081	JUNTA	GASKET	GUARNIZIONE
27-856091	JUNTA	GASKET	GUARNIZIONE
27-856704	JUNTA	GASKET	GUARNIZIONE
48-96148T1	CUERPO BOMBA	PUMP HOUSING	CORPO POMPA
47-89984T4	IMPULSOR	IMPELLER	GIRANTE

Ref.	R.O. OEM
REC47-89984Q5	47-89984Q5

MOTORES / ENGINES / MOTORI
MC-1 & ALPHA ONE

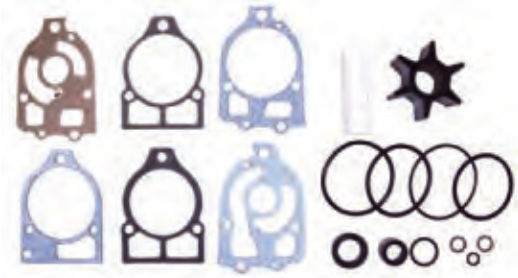

R.O. OEM			
324351	TAPA BOMBA	PUMP COVER	COPERCHIO POMPA
12-191833	JUNTA	GASKET	GUARNIZIONE
23-29804T	TUBO AGUA	WATER TUBE	TUBO ACQUA
25-30224Q	ARO	O-RING	ANELLO
25-30271	ARANDELA	WASHER	RONDELLA
25-30613	ARO	O-RING	ANELLO
25-33145	ARO	O-RING	ANELLO
25-90011	ARO	O-RING	ANELLO
26-455771	RETÉN	SEAL	TENUTA
27-32438	JUNTA	GASKET	GUARNIZIONE
27-426311	JUNTA	GASKET	GUARNIZIONE
27-856081	JUNTA	GASKET	GUARNIZIONE
27-856091	JUNTA	GASKET	GUARNIZIONE
27-856704	JUNTA	GASKET	GUARNIZIONE
47-89984T4	IMPULSOR	IMPELLER	GIRANTE
26-38970	ACOPLE GOMA	COUPLING	ACCOPPIAMENTO
25-38099	ARO	O-RING	ANELLO
25-26722	ARO	O-RING	ANELLO

KITS REPARACIÓN BOMBA AGUA (ALPHA ONE GEN II)
WATER PUMP SERVICE KITS (ALPHA ONE GEN II)
KIT RICAMBI POMPA ACQUA (ALPHA ONE GEN II)

Ref.	R.O. OEM
REC47-43026Q06	47-43026Q06

R.O. OEM				Cantidad Quanty Quantità
47-43026Q2	IMPULSOR	IMPELLER	GIRANTE	1
8172761	PLACA	WEAR PLATE	PIASTRA	1
27-8172771	JUNTA	GASKET	GUARNIZIONE	1
27-430331	JUNTA	GASKET	GUARNIZIONE	1
12-191833	JUNTA	GASKET	GUARNIZIONE	2
28-8M0032833	CHAVETA	KEY	CHIAVE	1
26-816575A2	RETÉN	FACE SEAL	TENUTA	1
816597A1	ACOPLAMIENTO	COUPLIN	ACCOPPIAMENTO	1

Ref.	R.O. OEM
RECMC00004	47-43026Q06

MOTORES / ENGINES / MOTORI
(1991+)

R.O. OEM				Cantidad Quanty Quantità
8172761	PLACA	WEAR PLATE	PIASTRA	1
27-430331	JUNTA	GASKET	GUARNIZIONE	1
47-43026Q02	IMPULSOR	IMPELLER	GIRANTE	1
807929A1	RETÉN	PUMP SEAL CARRIER	TENUTA	1
27-8172772	JUNTA	GASKET	GUARNIZIONE	1

Ref.	R.O. OEM
REC817275Q05	817275Q05

MOTORES / ENGINES / MOTORI
Serie / Serial / Serie D469859+

R.O. OEM				Cantidad Quanty Quantità
46-96148T1	TAPA BOMBA	WATER PUMP HOUSING	COPERCHIO POMPA	1
27-430331	JUNTA	GASKET	GUARNIZIONE	1
47-43026Q02	IMPULSOR	IMPELLER	GIRANTE	1
807929A1	RETÉN	SEAL	TENUTA	1
27-8172772	JUNTA	GASKET	GUARNIZIONE	1
8172761	PLACA	WEAR PLATE	PIASTRA	1

KITS REPARACIÓN BOMBA AGUA (BRAVO I, II, III)
WATER PUMP SERVICE KITS (BRAVO I, II, III)
KIT RICAMBI POMPA ACQUA (BRAVO I, II, III)

MERCRUISER

Ref.	R.O. OEM
REC47-59362Q08	47-59362Q08

Bombas con 2 piezas de plástico.
2 pcs. plastic bodies Sea Water pump
Pompa in 2 pz in plastica.

Ref.	R.O. OEM
REC59503	59503

Tapa bomba
Wear plate
Piastra

Ref.	R.O. OEM
REC47-59362T6	47-59362T6

Para bombas de una pieza.
Fits one piece pump.
Per pompe in bronzo in pz.

Ref.	R.O. OEM
REC46-807151A14	807151A14

Bombas con 1 cuerpo de plástico.
1 piece plastic body pump
Pompa con 1 corpo in plastica

Ref.	R.O. OEM
SHE15979	808145T

MOTORES / ENGINES / MOTORI
Diesel 7.3L

Ref.	R.O. OEM
REC47-59362T5	47-59362T5

Para modelos de bomba de bronce de una pieza Mercruiser (-1982).
Fits Mercruiser (-1982) with one piece brass pump.
Per pompe in bronzo in 1 pz (1982)

Ref.	R.O. OEM
REC47-59362A4	47-59362A4

Para bomba Mercruiser de dos piezas.
Fits Mercruiser two piece pump.
Per pompe in 2 pz.

DESPIECE BOMBA AGUA
WATER PUMP ASSEMBLY
ESPLOSO POMPA ACQUA

Nº	REF.	R.O. OEM	Descripción	Description	Descrizione	Cantidad Quanty Quantità
2	**REC12-20084**	12-20084	ARANDELA	WASHER	RONDELLA	5
4	**REC27-8052151**	27-8052151	JUNTA	GASKET	GUARNIZIONE	1
5	**REC94916**	94916	TAPA	WEAR PLATE	COPERCHIO	1
6	**REC27-94914**	27-94914	JUNTA	GASKET	GUARNIZIONE	1
7	**REC47-59362Q01**	47-59362Q01	IMPULSOR	IMPELLER	GIRANTE	1
8	**REC19-59504**	19-59504	TAPÓN	PLUG	TAPPO	1
9	**REC25-33465**	25-33465	ARANDELA	O-RING	RONDELLA	1
10	**REC46-807151A14**	46-807151A14	CUERPO BOMBA	PUMP HOUSING	CORPO POMPA	1
12	**REC94576**	94576	TAPA	WEAR PLATE	PIASTRA	1
13	**REC25-94288**	25-94288	ARO TÓRICO	O-RING	TENUTA	1
14	**REC26-90562**	26-90562	RETÉN	OIL SEAL	PARAOLIO	2
15	**REC46-94913A5**	46-94913A5	CUERPO COJINETE	BEARING HOUSING	CORPO CUSCINETTO	1
16	**REC30-72961**	30-72961	COJINETE	BEARING	CUSCINETTO	2
17	**REC59501A1**	59501A1	EJE	SHAFT	ASSE	1
18	**REC53-23720**	53-23720	ARO RETENEDOR	RETAINER RING	TENUTA	1
19	**REC26-72785**	26-72785	RETÉN ACEITE	OIL SEAL	PARAOLIO	1
20	**REC92995-08600**	12-36001	ARANDELA	WASHER	RONDELLA	5
21	**REC861579**	861579	POLEA	PULLEY	PULEGGIA	1

BOMBA CON 2 PIEZAS DE PLÁSTICO
2 PCS. PLASTIC PUMP
POMPA CON 2 PZ IN PLASTICA

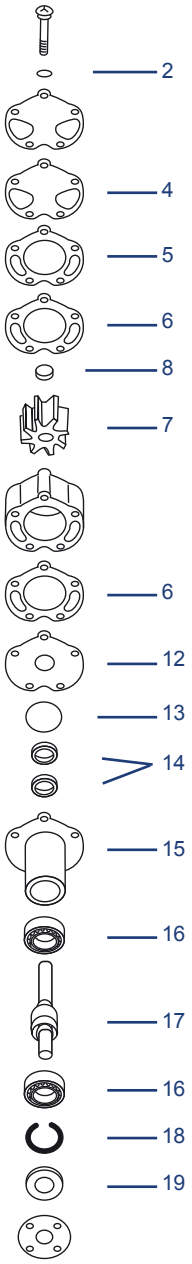

BOMBA CON 1 PIEZA DE PLÁSTICO
1 PC. PLASTIC PUMP
POMPA CON 1 PZ IN PLASTICA

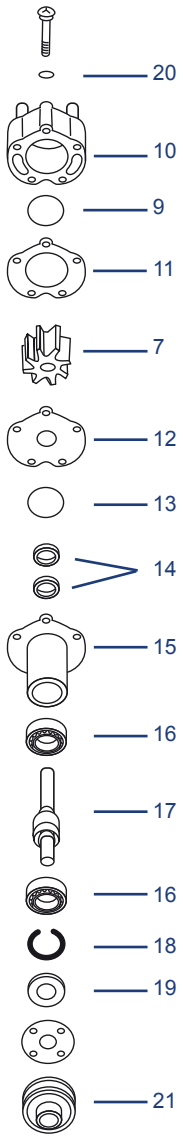

ÁNODOS
ANODES
ANODOS

ZN	R.O. OEM R.O.	(KG)	MOTORES ENGINES MOTORI
TEN00800	1301339	0,48	50 HP

TECNOSEAL save your dreams

ZN	R.O. OEM R.O.	(KG)	MOTORES ENGINES MOTORI
TEN00801	34127	0,60	80 - 140 HP

TECNOSEAL save your dreams

ZN	R.O. OEM R.O.	(KG)	MOTORES ENGINES MOTORI
TEN00802	94286	0,27	25 HP

TECNOSEAL save your dreams

ZN	R.O. OEM R.O.	(KG)	MOTORES ENGINES MOTORI
TEN00803	47820	0,31	20 HP

TECNOSEAL save your dreams

ZN	R.O. OEM R.O.	(KG)	MOTORES ENGINES MOTORI
TEN00804	46399	0,40	50 - 140 HP

TECNOSEAL save your dreams

ZN	R.O. OEM R.O.	(KG)	MOTORES ENGINES MOTORI
TEN00806	43994	0,90	ALPHA GEN II, BRAVO

TECNOSEAL save your dreams

ZN	R.O. OEM R.O.	(KG)	MOTORES ENGINES MOTORI
TEN00806BIS	821521	0,89	

TECNOSEAL save your dreams

ZN	R.O. OEM R.O.	(KG)	MOTORES ENGINES MOTORI
TEN00807	55989	0,10	ALPHA ONE, BRAVO I

TECNOSEAL save your dreams

ZN	R.O. OEM R.O.	(KG)	MOTORES ENGINES MOTORI
TEN00814	821629	0,70	ALPHA ONE, ALPHA GEN II

TECNOSEAL save your dreams

ZN	R.O. OEM R.O.	(KG)	MOTORES ENGINES MOTORI
TEN00815	821630	0,98	BRAVO I, II, III

TECNOSEAL save your dreams

ZN	R.O. OEM R.O.	(KG)	MOTORES ENGINES MOTORI
TEN00817	806189	0,12	PISTON ALPHA

TECNOSEAL save your dreams

ZN	R.O. OEM R.O.	(KG)	MOTORES ENGINES MOTORI
TEN00818	806190	0,34	PISTON BRAVO

TECNOSEAL save your dreams

ZN	R.O. OEM R.O.	(KG)	MOTORES ENGINES MOTORI
TEN00819	806105	0,23	ALPHA ONE, ALPHA GEN II

TECNOSEAL save your dreams

ZN	R.O. OEM R.O.	KG (KG)	MOTORES ENGINES MOTORI
TEN00820	76214-5	0,34	ALPHA

TECNOSEAL save your dreams

ZN	R.O. OEM R.O.	Ø (mm)	KG (KG)	MOTORES ENGINES MOTORI
TEN00823	823912	20	0,01	
TEN00824	823913	24	0,02	

TECNOSEAL save your dreams

ZN	R.O. OEM R.O.	KG (KG)	MOTORES ENGINES MOTORI
TEN00826	76214	0,31	VERADO - BRAVO

TECNOSEAL save your dreams

ZN	R.O. OEM R.O.	KG (KG)	MOTORES ENGINES MOTORI
TEN00827	17264	0,51	FORMULA 60 HP

TECNOSEAL save your dreams

ZN	R.O. OEM R.O.	KG (KG)	MOTORES ENGINES MOTORI
TEN00828	806188	0,17	BRAVO I, III

TECNOSEAL save your dreams

ZN	R.O. OEM R.O.	KG (KG)	MOTORES ENGINES MOTORI
TEN00835	76214-4	0,26	

TECNOSEAL save your dreams

ZN	R.O. OEM R.O.	KG (KG)	MOTORES ENGINES MOTORI
TEN00836	865182	0,52	BRAVO III

TECNOSEAL save your dreams

ZN	R.O. OEM R.O.	KG (KG)	MOTORES ENGINES MOTORI
TEN00839	853762	0,15	

TECNOSEAL save your dreams

KITS

ZN	R.O. OEM R.O.	KG (KG)	MOTORES ENGINES MOTORI
TENKITALPHAONE/1	8887562Q02	1,83	MR, ALPHA ONE (1984-1990)

TECNOSEAL save your dreams

ZN	R.O. OEM R.O.	KG (KG)	MOTORES ENGINES MOTORI
TENKITALPHAONE/2	888756Q01 888756Q03	2,52	ALPHA ONE GEN II

TECNOSEAL save your dreams

ZN	R.O. OEM R.O.	KG (KG)	MOTORES ENGINES MOTORI
TENKITBRAVOI	888758Q01	2,34	BRAVOI

TECNOSEAL save your dreams

ZN	R.O. OEM R.O.	KG (KG)	MOTORES ENGINES MOTORI
TENKITBRAVOII-III	888761Q01	2,13	BRAVOII & III

TECNOSEAL save your dreams

ZN	R.O. OEM R.O.	KG (KG)	MOTORES ENGINES MOTORI
TENKITBRAVOIII-04	888761Q02	3	BRAVOIII (2004+)

TECNOSEAL save your dreams

ZN	KG (KG)	AL	KG (KG)	R.O. OEM R.O.	MOTORES ENGINES MOTORI
CMX-1	0,136	CMX-1A	0,13	85538 823341	ALPHA I

ZN	KG (KG)	AL	KG (KG)	R.O. OEM R.O.	MOTORES ENGINES MOTORI
CM762144	0,31	CM762144A	0,13	76214-4	BRAVO III (2003+)

ZN	KG (KG)	AL	KG (KG)	R.O. OEM R.O.	MOTORES ENGINES MOTORI
CM762145	0,33	CM762145A	0,13	76214A2 76214Q5	ALPHA ONE GEN II BRAVO III (-2003)

ZN	KG (KG)	R.O. OEM R.O.	MOTORES ENGINES MOTORI
CM76214Q5	0,33	76214Q5	BRAVO 4 225-250 HP

ZN	KG (KG)	AL	KG (KG)	R.O. OEM R.O.	MOTORES ENGINES MOTORI
CM31640	0,55	CM31640A	0,13	31640A4	ALPHA ONE

ZN	KG (KG)	AL	KG (KG)	R.O. OEM R.O.	MOTORES ENGINES MOTORI
CM46399	0,36	CM46399A	0,14	46399A1 822777Q1	ALPHA ONE GEN II

ZN	KG (KG)	AL	KG (KG)	R.O. OEM R.O.	MOTORES ENGINES MOTORI
CM34127	0,59	CM34127A	0,22	34127T2	

ZN	KG (KG)	AL	KG (KG)	R.O. OEM R.O.	MOTORES ENGINES MOTORI
CM806189	0,10	CM806189A	0,04	806189Q1	GEN II

ZN	KG (KG)	AL	KG (KG)	R.O. OEM R.O.	MOTORES ENGINES MOTORI
CM806105	0,23	CM806105A	0,09	806188A1	ALPHA ONE, GEN II

ZN	KG (KG)	AL	KG (KG)	R.O. OEM R.O.	MOTORES ENGINES MOTORI
CM55989	0,11	CM55989A	0,09	55989A9 55989Q9	ALPHA ONE, GEN II

ZN	KG (KG)	AL	KG (KG)	R.O. OEM R.O.	MOTORES ENGINES MOTORI
CM821629	0,78	CM821629A	0,30	821629Q1	ALPHA ONE GEN II

ZN	KG (KG)	AL	KG (KG)	R.O. OEM R.O.	MOTORES ENGINES MOTORI
CM34762	0,24	CM34762A	0,09	34762A1	

ZN	KG (KG)	AL	KG (KG)	R.O. OEM R.O.	MOTORES ENGINES MOTORI
CM806188	0,15	CM806188A	0,06	806188A1	BRAVO

ZN	KG (KG)	AL	KG (KG)	R.O. OEM R.O.	MOTORES ENGINES MOTORI
CM806190	0,35	CM806190A	0,14	806190Q1	BRAVO

ZN	KG (KG)	AL	KG (KG)	R.O. OEM R.O.	MOTORES ENGINES MOTORI
CM821630	1,00	CM821630A	0,39	821630A1/Q1	BRAVO

ZN	KG (KG)	AL	KG (KG)	R.O. OEM R.O.	MOTORES ENGINES MOTORI
CM43994	0,95			43994A2 821631A1	Antiguos old vecchio

ZN	KG (KG)	AL	KG (KG)	R.O. OEM R.O.	MOTORES ENGINES MOTORI
CM821631	0,89	CM821631A	0,35	43994A2 821631A1	Modernos New style Moderno

KITS

ZN (KIT)	KG (KG)	ZN (ÁNODO / ANODE / ANODO)	KG (KG)	R.O. OEM R.O.	MOTORES ENGINES MOTORI
CMCC	0,93	CMC			ALPHA I , MR

ZN	KG (KG)	AL	KG (KG)	R.O. OEM R.O.	MOTORES ENGINES MOTORI
CMPNCZF16Z	0,93	CMPNCF16A	0,54		ALPHA I, BRAVO I

ZN	KG (KG)	AL	KG (KG)	R.O. OEM R.O.	MOTORES ENGINES MOTORI
	1,14	CMPNEZF14A	0,65		BRAVO II

ZN	KG (KG)	AL	KG (KG)	MOTORES ENGINES MOTORI
CMPNDAF14UNS	0,93	CMPNDAF14UNSA	0,54	BRAVO III (-2003)

ZN	KG (KG)	AL	KG (KG)	R.O. OEM R.O.	TIPO TYPE TIPO	MOTORES ENGINES MOTORI
CMPNAZ	0,09	CMPNAA	0,03		A	BRAVO
CMPNBZ	0,23	CMPNBA	0,09		B	
CMC	0,45	CMPNCA	0,19		C	
CMPNDZ	0,68	CMPNDA	0,29		C	

ZN	KG (KG)	AL	KG (KG)	MOTORES ENGINES MOTORI
CM865182CZ	0,51	CM865182CA	0,42	BRAVO III (2004+)

AL	MG	R.O. OEM R.O.	MOTORES ENGINES MOTORI
CMBRAVO3KITA	CMBRAVO3KITM	888761Q02	BRAVO III (2004+)

AL	MG	R.O. OEM R.O.	MOTORES ENGINES MOTORI
CMALPHAGEN1KITA	CMALPHAGEN1KITM	888756Q02	MR, ALPHA ONE (1984-90)

AL	MG	R.O. OEM R.O.	MOTORES ENGINES MOTORI
CMALPHAKITA	CMALPHAKITM	888756Q01 888756Q03	ALPHA ONE GEN II

AL	MG	R.O. OEM R.O.	MOTORES ENGINES MOTORI
CMBRAVO1KITA	CMBRAVO1KITM	888758Q01	BRAVO I

AL	MG	R.O. OEM R.O.	MOTORES ENGINES MOTORI
CMBRAVO2Y3KITA	CMBRAVO2Y3KITM	888761Q01	BRAVO II, BRAVO III

TRANSOM

TRANSOM Y PISTÓN DIRECCIÓN
GIMBAL HOUSING & POWER STEERING CYLINDER KIT
TRANSOM E PISTONE STERZO
ALPHA ONE Gen I & II

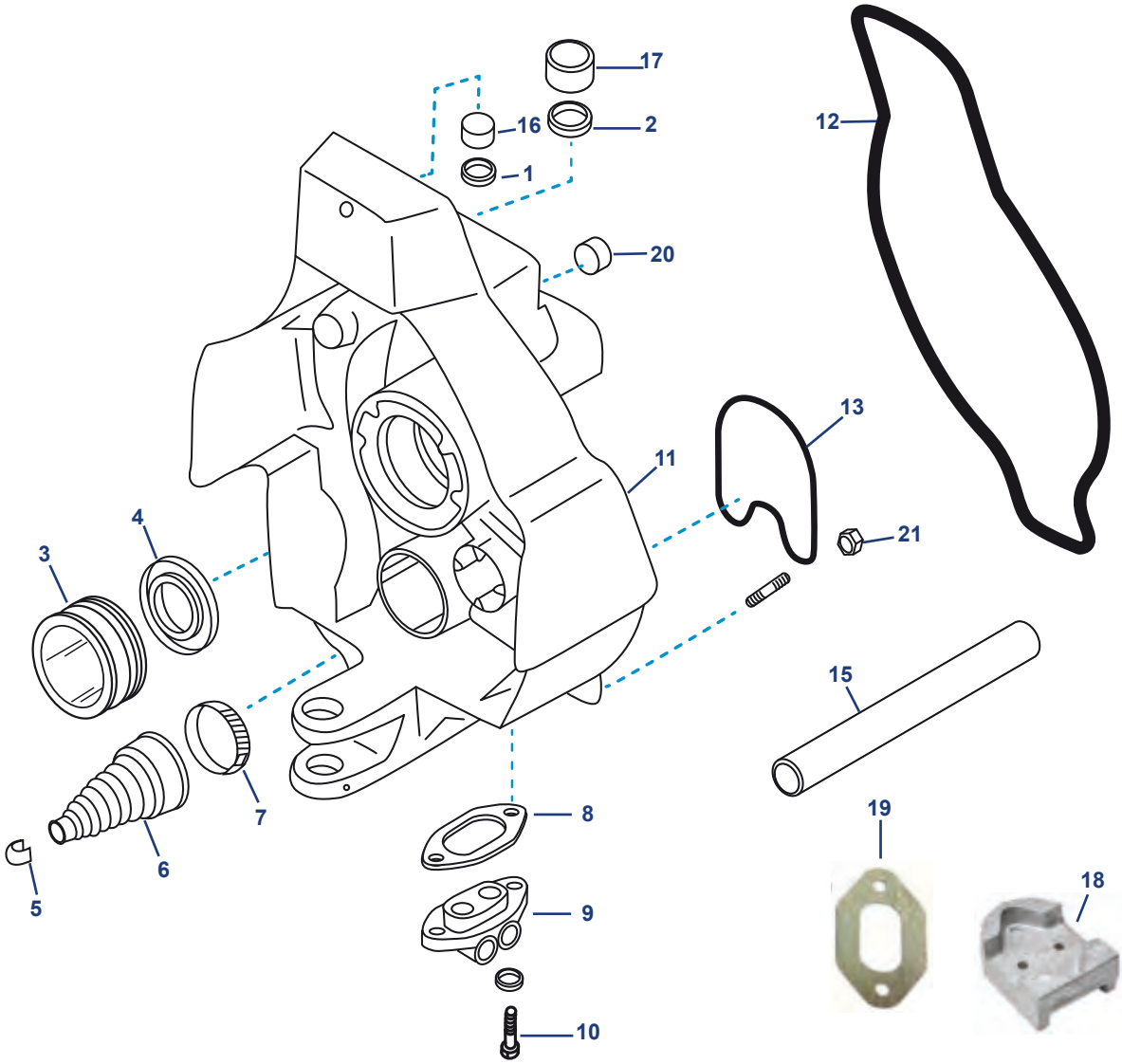

Ref.	R.O. OEM
REC22-88847A1	22-88847A1

Kit tuerca y tapones
Plug kit
Kit dado tappo

Ref.	R.O. OEM
REC27-47644-1	27-47644-1

CONECTOR HIDRÁULICO
HYDRAULIC CONNECTOR
CONNETORE IDRÁULICO

MOTORES / ENGINES / MOTORI
ALPHA ONE S (1986-89)
SSM II / III / IV / V (1982-95)
Para conector / for connector / per connetore: 47347

Ref.	R.O. OEM
REC30-879194A01	30-879194A01

Cojinete para todos los transom Alpha One Gen I - Gen II
Gimbal Bearing assy. for all transom Alpha One Gen I - Gen II
Cuscinetto per tutti i transom Alpha One Gen I - Gen II

Ref.	R.O. OEM
REC8M0080805	8M0080805

Kit conector Trim
Trim connector kit
Kit connettore Trim

Ref.	R.O. OEM	
CM55989	55989Q9	
CM55989A		Al
REC55989Q9		Kit Al

Ánodo TRANSOM
Transom anode
Anodo transom

Nº	Ref.	R.O. OEM	Descripción	Description	Descrizione
1	**REC26-54925**	26-54925	RETÉN (Alpha one)	SEAL (Alpha one)	PARAOLIO (Alpha one)
2	**REC26-55682**	26-55682	RETÉN (Alpha one)	SEAL (Alpha one)	PARAOLIO (Alpha one)
2	**REC26-8M2005029**	26-416071	RETÉN (Alpha one II Gen)	SEAL (Alpha one II Gen)	PARAOLIO (Alpha one II Gen)
3	**REC30-879194A01**	30-879194A01	COJINETE TRANSOM ALPHA ONE GEN I - GEN II	GIMBAL BEARING FOR ALL TRANSOM ALPHA ONE GEN I - GEN II	CUSCINETTO TRANSOM ALPHA ONE GEN I - GEN II
4	**REC26-88416**	26-88416	RETÉN	SEAL	PARAOLIO
5	**REC54-38863**	54-38863	ABRAZADERA	CLAMP	FASCETTA
6	**REC74639Q02**	74639Q02	FUELLE CABLE CAMBIO	SHIFT BELLOW	CAVO CAMBIO A SOFFIETTO
7	**REC54-815504320**	54-815504320	ABRAZADERA	CLAMP	FASCETTTA
8	**REC27-988231**	27-988231	JUNTA	GASKET	GUARNIZIONE
9	**REC8M0080805**	8M0080805	KIT CONECTOR	TRIM CONNECTOR KIT	KIT CONNETTORE TRIM,
10	**REC10-28668**	10-28636	TORNILLO	SCREW	VITE
11	**RM94989A6**	94989A6	TRANSOM GEN I (EJE CUADRADO / ESTRIADO)	GEN I TRANSOM (SQUARED FIXATION SHAFT)	TRANSOM GEN I (ASSE QUADRATO
11	**RM42260A6**	42260A6	TRANSOM GEN I (EJE CUADRADO / CUADRADO)	GEN I TRANSOM (SQUARED FIXATION SHAFT)	TRANSOM GEN I (ASSE QUADRATO
11	**RM43881A14**	8M0062568	TRANSOM (1991+) GEN II	GIMBAL HOUSING ASSY. (1991+)	TRANSOM (1991+) GEN II
12	**REC43713**	43713	JUNTA TRANSOM GEN II, BRAVO	BLACKHAWK TRANSOM SEAL GEN II, BRAVO	GUARNIZIONE TRANSOM GEN II, BRAVO
12	**REC65533A1**	65533A1	JUNTA TRANSOM MC1/R/ALPHA ONE	TRANSOM SEAL MC1/R/ALPHA ONE	GUARNIZIONE TRANSOM MC1/R/ALPHA ONE
13	**REC41802**	41802	RETÉN TRANSOM	SEAL	TENUTA
15	**REC32-4172533**	32-4172533	TUBO AGUA Ø 3/4"	Ø 3/4" WATER HOSE	Ø 3/4" TUBO ACQUA
15	**REC32-32461**	32-32461	TUBO AGUA Ø 5/8"	Ø 5/8" WATER HOSE	Ø 5/8" TUBO ACQUA
16	**RM23-98356**	23-98356	CASQUILLO SUPERIOR	UPPER BUSHING	BOCCOLA SUPERIORE
17	**RM23-983571**	23-983571	CASQUILLO INFERIOR	LOWER BUSHING	BOCCOLA INFERIORE
18	**CM821631**	821631Q1	ÁNODO ZINC	ZINC ANODE	ANODO ZINCO
18	**CM821631A**	821631Q1	ÁNODO ALUMINIO	ALUMINIUM ANODE	ANODO ALLUMINIO
19	**REC27-995061**	27-995061	JUNTA	GASKET	GUARNIZIONE
20	**REC22-73379**	22-73379	TAPÓN (.250-18)	CAP (.250-18)	TAPPO (.250-18)
21	**REC11-34933**	11-34933	TUERCA	NUT	DADO

TRANSON COMPLETO
TRANSOM ASSEMBLY
TRANSOM COMPLETO

ALPHA ONE GEN I

Ref.	R.O. OEM
TRANSONALPHAI	6-6010000CP

ALPHA ONE GEN II

Ref.	R.O. OEM
TRANSONALPHA2G	6-6111002LP

CAMPANA TRANSOM, CABLE CAMBIO Y BOMBA DIRECCIÓN
TRANSOM PLATE, SHIFT CABLE & PUMP ASSY. POWER STEERING
CAMPANA TRANSOM, CAVO CAMBIO E POMPA STERZO

Ref.	R.O. OEM
REC87-814281A5	87-814281A5

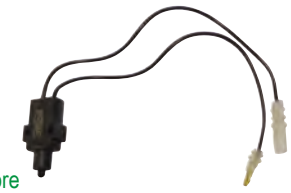

Microrruptor
Shift plate kit
Microinteruttore
3.0L, LX, 4.3L, LXL, 5.0L & 5.7, LX (1996+)

Ref.	R.O. OEM
RM8M0052936	87-8M0052936 87-808009A1 87-808009A3

Microrruptor
Shift plate kit
Microinterruttore
4.3MPI, 5.0LMPI, 350MAG MPI, MX, 6.2L MPI , 4.3, 5.0,5.7L EFI, LX

Ref.	R.O. OEM
REC87-808009A2	87-808009A2 87-8M0052935

Microrruptor
Shift plate kit
Microinterruttore
4.3MPI, 5.0LMPI, 350MAG MPI, MX, 6.2L MPI

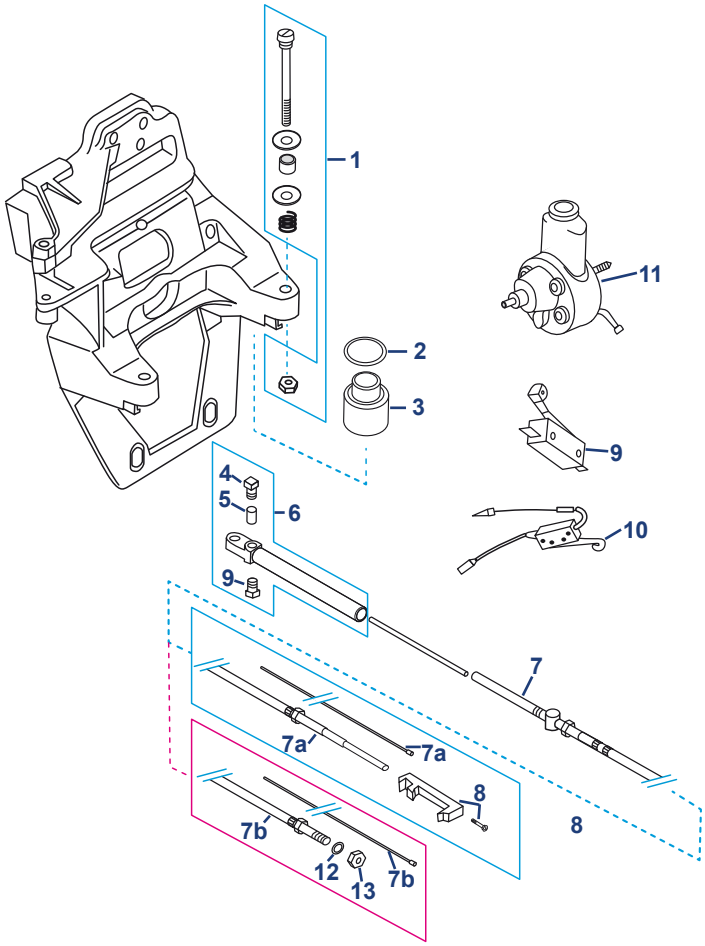

Ref.	R.O. OEM
REC10-31700	10-31700

Tornillo
Screw
Vite

Ref.	R.O. OEM
REC73873A1	73873A1

Polea "V" bomba servo
P/S Pump Pulley
Puleggia "V"

Ref.	R.O. OEM
REC861578	861578

Polea Serpentín
P/S Pump Pulley
Puleggia serpentina

Nº	Ref.	R.O. OEM	Descripción	Description	Descrizione
1	REC10-97934A1	10-97934A1	KIT MONTAJE SILENTBLOCK CAMPANA	MOTOR MOUNT BOLT KIT	KIT SILENTBLOCK CAMPANA
2	REC23-99322	23-99322	ESPACIADOR SILENTBLOCK	SILENTBLOCK SPACER	SILENTBLOCK DISTANZIALE
3	REC865329A02	865329A02	SILENTBLOCK MOTOR	MOTOR MOUNT SILENTBLOCK	SILENTBLOCK MOTORE
4	REC10-20518	10-20518	TORNILLO	BOLT	VITE
5	REC43436	43436	ANCLAJE	ANCHOR	SEDE
6	REC02644	43433 + 43436 + 10-20518	GUÍA CABLE CAMBIO	GUIDE	GUIDA CAVO CAMBIO
7A	REC865436A02	865436A02	CABLE CAMBIO R/MR/ALPHA ONE GEN II	R/MR/ALPHA ONE GEN II SHIFT CABLE	CAVO CAMBIO R/MR/ALPHA ONE GEN II
7A	RM19543A10	865436A02	CABLE CAMBIO ORIGINAL R/MR/ALPHA ONE GEN II	R/MR/ALPHA ONE GEN II SHIFT CABLE ORIGINAL	CAVO CAMBIO ORIGINAL R/MR/ALPHA ONE GEN II
7B	REC865437A02	865437A02	CABLE CAMBIO BRAVO	BRAVO SHIFT CABLE	CAVO CAMBIO BRAVO
8	REC8507522	8507522 + 10-31700	KIT ACOPLE CABLE CAMBIO	SHIFT CABLE SLIDE	KIT ACCOPIAMENTO CAVO CAMBIO
9	RM864363A1	864363A1	MICRORRUPTOR	SHIFT PLATE KIT	MICROINTERRUTTORE
10	RM864364A1	864364A1	MICRORRUPTOR	SHIFT PLATE KIT	MICROINTERRUTTORE
11	REC16792A39	16792A39	BOMBA DIRECCIÓN	PUMP ASS. POWER STEERING	POMPA DI STERZO
12	REC12-815472	12-815472	ARANDELA BRAVO	WASHER BRAVO	RONDELLA BRAVO
13	RM11-49910	11-49910	TUERCA BRAVO	NUT BRAVO	DADO BRAVO

SOPORTE TRANSOM
GIMBAL HOUSING RING ASSEMBLY
SUPPORTO TRANSOM
ALPHA ONE GEN II

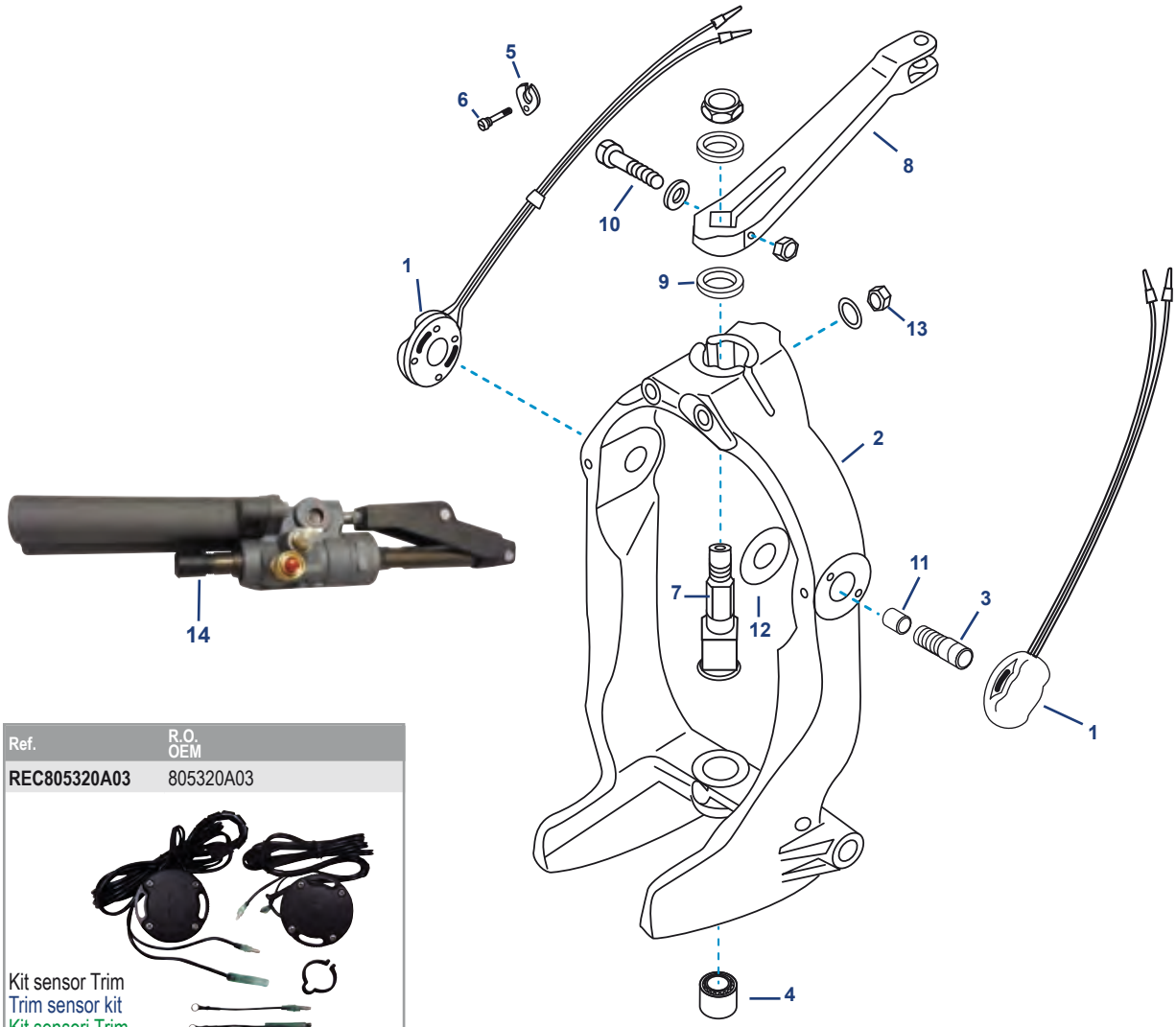

Ref.	R.O. OEM
REC805320A03	805320A03

Kit sensor Trim
Trim sensor kit
Kit sensori Trim

Nº	Ref.	R.O. OEM	Descripción	Description	Descrizione
1	**REC805320A03**	805320A03	KIT SENSORES TRIM	TRIM SENSOR KIT	KIT SENSORI TRIM
2	**RM865328A01**	865328A01	SOPORTE TRANSOM Design II (0M815639+)	GIMBAL RING ASSEMBLY Design II (0M815639+)	SUPPORTI TRANSOM Design II (0M815639+)
3	**REC77123**	77123	TORNILLO ALPHA (-1998) (-0M815638)	ALPHA SCREW (-1998) (-0M815638)	VITE ALPHA (-1998) (-0M815638)
3	**REC10-86801**	10-86801	TORNILLO ALPHA (1998+) (0M85639+)	ALPHA SCREW (1998+) (0M85639+)	VITE ALPHA (1998+) (0M85639+)
4	**RM23-99352**	23-99352	COJINETE	BEARING	CUSCINETTO
5	**RM54-12078**	54-12078	ABRAZADERA	CLAMP	FASCETTA
6	**RM10-28635**	10-28635	TORNILLO SUJECCIÓN	SCREW	VITE
7	**REC98230A1**	98230A1	EJE	SHAFT	ASSE
8	**RM866322A01**	866322A01	BIELA DIRECCIÓN	LEVER ASSY	BIELLA STERZO
9	**RM12-98548**	12-98548	ARANDELA	WASHER	RONDELLA
10	**RM10-807204**	10-807204	TORNILLO	SCREW	VITE
11	**REC23-847637**	23-847637	CASQUILLO	BUSING	BOCCOLA
12	**RM12-41721**	12-41721	ARANDELA	WASHER	RONDELLA
13	**REC11-862903**	11-134371	TUERCA	NUT	DADO
14	**REC806034A1**	866200A01	PISTÓN DIRECCIÓN MODERNA (1991+) PLÁSTICO	NEWER POWER STEERING PISTON (1991+) PLASTIC	PISTONE IDRAULICO MODERNO (1991+) PLASTICA
14	**RM806034A2**	806034A2	PISTÓN DIRECCIÓN ANTIGUA (-1991) METÁLICA	OLDER POWER STEERING PISTON (-1991) METALIC	PISTONE IDRAULICO VECCHIO (-1991) METALLO

CABEZAL COLA
BELL HOUSING
PARTE SUPERIORE TRANSOM
MC - MR1 - ALPHA ONE - ALPHA ONE GEN II

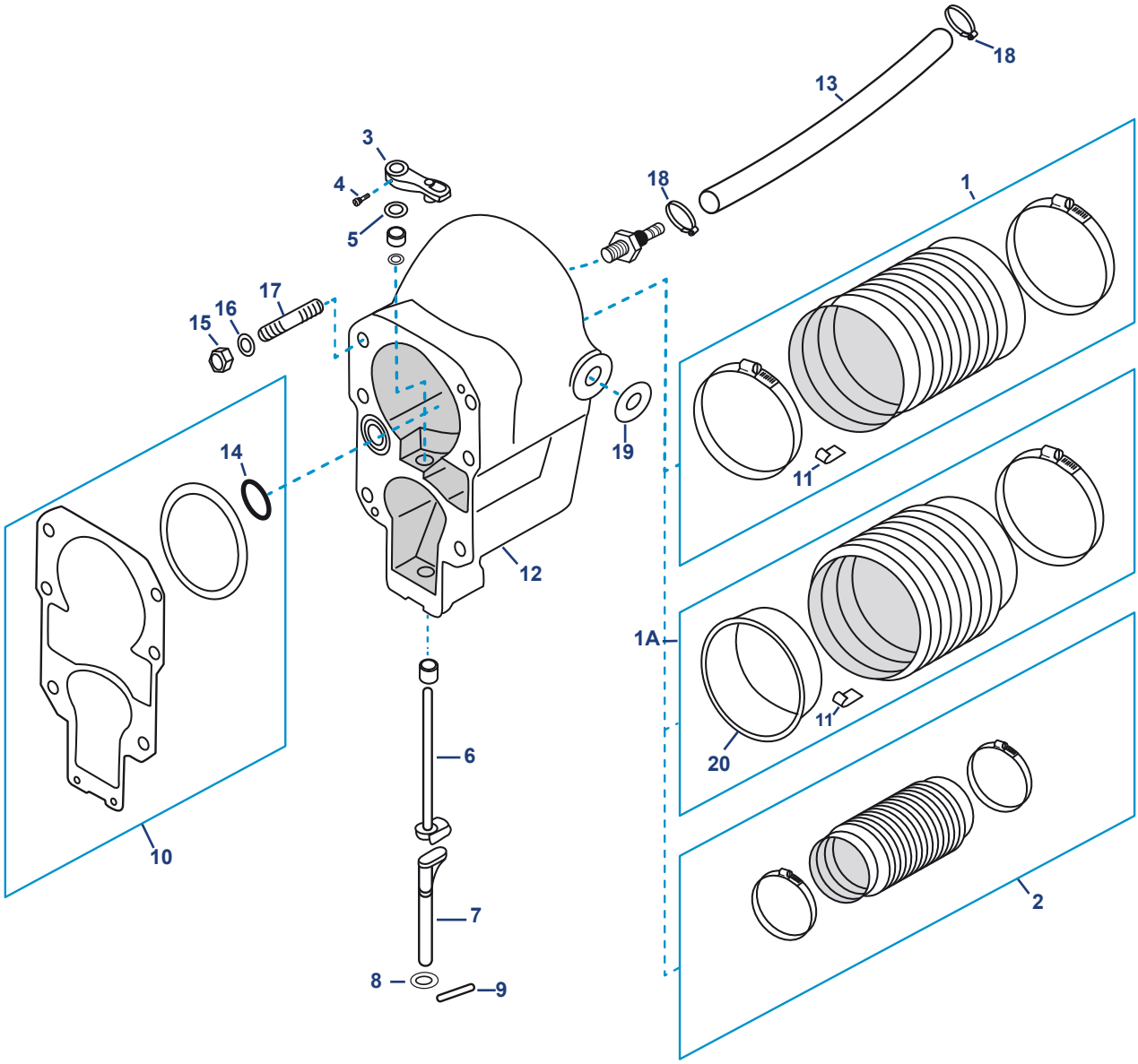

Ref.	R.O. OEM
REC816607	816607

Casquillo fuelle
Bellow Flange Ring
Anello

Ref.	R.O. OEM
REC23-806036A1	23-806036A1

Kit retenes
Shift shaft busing
Kit tenute
Alpha Gen II, (F094775+)

Ref.	R.O. OEM
REC23-805041A2	23-805041A2

Kit retenes
Shift shaft busing
Kit tenute
R/MR, Alpha Gen II,
(-F094774)

Ref.	R.O. OEM
REC45518T1	45518T1

Kit cambio
Shift lever kit
Kit cambio

Nº	Ref.	R.O. OEM	Descripción	Description	Descrizione
1	**REC60932A4**	60932A4	KIT FUELLE (3469428+) R/MR/ALPHA ONE	U-JOINT BELLOW (3469428+) KIT R/MR/ALPHA ONE	KIT CUFFIA (3469428+) R/MR/ALPHA ONE
1A	**REC816431A1**	816431A1	KIT FUELLE ALPHA ONE GEN II	U-JOINT BELLOW KIT ALPHA ONE GEN II	KIT CUFFIA ALPHA ONE GEN II
2	**REC18654A1**	18654A1	KIT FUELLE ESCAPE	U-JOINT BELLOW KIT	KIT CUFFIA DI SCARICO
3	**REC45518A3**	45518A3	PASADOR	SHIFT ARM	CHIAVISTELLO
4	**REC10-45590**	10-45590	TORNILLO CIERRE	SET SCREW	VITE
5	**REC12-39116**	12-39116	JUNTA	GASKET	GUARNIZIONE
6	**REC816685**	816685	EJE CABLE CAMBIO ALPHA ONE GEN II	UPPER SHIFT SHAFT ALPHA ONE GEN II	ASSE CAMBIO ALPHA ONE GEN II
6	**REC45589A3**	45589A3	EJE CABLE CAMBIO ALPHA ONE GEN I	UPPER SHIFT SHAFT ALPHA ONE GEN I	ASSE CAMBIO ALPHA ONE GEN I
7	**REC621041**	621041	EJE INTERMEDIO	INTERMEDIATE SHIFT SHAFT	ASSE INTERMEDIO
8	**REC12-32666**	12-32666	ARANDELA	WASHER	RONDELLA
9	**REC18-32665**	18-32665	PASADOR	COTTER PIN	CHIAVISTELLO
10	**REC27-94996Q2**	27-94996Q2	KIT JUNTAS TRANSOM ALPHA ONE & GEN II	GASKET KIT ALPHA ONE & GEN II	KIT GUARNIZIONI TRANSOM ALPHA ONE & GEN II
10	**REC27-64818Q4**	27-64818Q4	KIT JUNTAS TRANSOM MC1	GASKET KIT MC1	KIT GUARNIZIONI TRANSOM MC1
11	**REC54-86049**	54-86049	CLIP FUELLE	GROUNDING CLIP	CLIP CUFFIA
12	**RM42815A6**	42815A6	CAMPANA TRANSOM ALPHA ONE (1983-90)	ALPHA ONE BELL HOUSING (1983-90)	CAMPANA TRANSOM ALPHA ONE (1983-90)
12	**RM806031A2**	806031A2	CAMPANA TRANSOM GEN II (1991+)	GEN II BELL HOUSING (1991+)	CAMPANA TRANSOM GEN II (1991+)
13	**REC32-4172533**	32-4172533	TUBO AGUA Ø 3/4 13$^{7/8}$"L	WATER HOSE Ø 3/4 13$^{7/8}$"L	TUBO ACQUA Ø 3/4" 13$^{7/8}$"L
13	**REC32-32461**	32-32461	TUBO AGUA Ø 5/8 13$^{7/8}$"L	WATER HOSE Ø 5/8 13$^{7/8}$"L	TUBO ACQUA Ø 5/8" 13$^{7/8}$"L
14	**REC0307239**	25-33504	ARO TÓRICO	O-RING	ANELLO
15	**REC11-34933**	11-134391	TUERCA (.4375-20)	NUT (.4375-20)	DADO (.4375-20)
16	**REC12-45176**	12-35935	ARANDELA (.435 x .875 x .105)	WASHER (.435 x .875 x .105)	RONDELLA (.435 x .875 x .105)
17	**REC16-59579**	16-59579	TORNILLO	SCREW	VITE
18	**REC54-815504412**	54-815504412	ABRAZADERA	CLAMP	FASCETTA
19	**REC12-72498**	12-72498	ARANDELA	WASHER	RONDELLA
20	**REC816607**	816607	CASQUILLO FUELLE	BELLOW FLANGE RING	ANELLO

Ref.	R.O. OEM
RM53-87843	53-87843

Circlip
Circlip
Clip

Ref.	R.O. OEM
REC22-861150T02	22-861150A1

Racor aceite
Oil racord
Racordo olio

Ref.	R.O. OEM
RM22-861163	22-861163

Racor aceite
Oil racord
Racordo olio

TRANSOM
GIMBAL HOUSING
TRANSOM
BRAVO

Ref.	R.O. OEM
REC22-88847A1	22-88847A1

Kit tuerca y tapones
Plug kit
Kit dado tappo

Ref.	R.O. OEM
REC8M0080805	8M0080805

Kit conector Trim
Trim connector kit
Kit connettore Trim

Ref.	R.O. OEM	
CM821631	821631Q	
CM821631A		Al

Ref.	R.O. OEM
REC30-879194A01	30-879194A01

Cojinete
Bearing
Cuscinetto

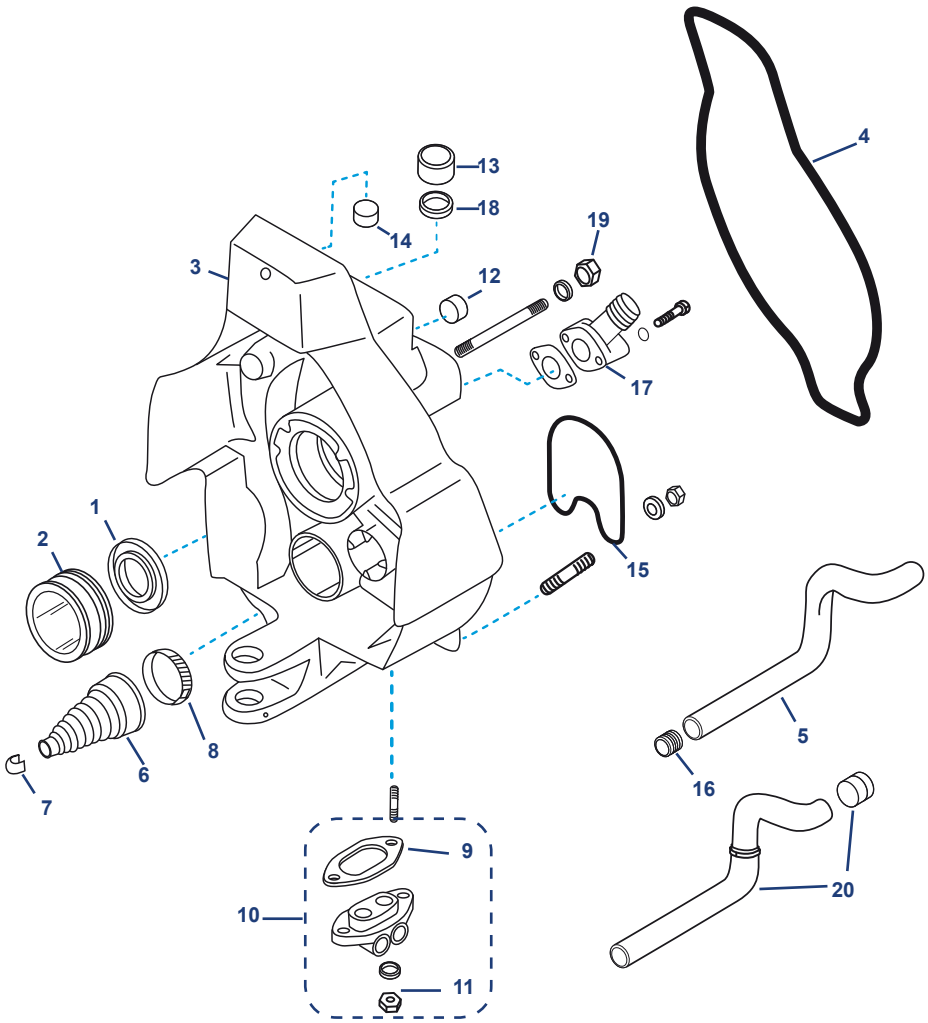

Nº	Ref.	R.O. OEM	Descripción	Description	Descrizione
1	REC26-88416	26-88416	RETÉN ACEITE	OIL SEAL	PARAOLIO
2	REC30-879194A01	879194A01 & A02	COJINETE	GIMBAL BEARING	CUSCINETTO
3	RM43881A17	43881A17	CARCASA	GIMBAL HOUSING ASSY.	CARCASSA
4	REC43713	43713	JUNTA TRANSON	TRANSOM SEAL	GUARNIZIONE TRANSOM
5	REC32-43437	32-43437	TUBO AGUA DESIGN I	WATER HOSE DESIGN I	TUBO ACQUA DESIGN I
6	REC74639Q02	74639Q02	FUELLE CABLE CAMBIO	SHIFT CABLE BELLOW	CUFFIA CAMBIO
7	REC54-38863	54-38863	ABRAZADERA	CLAMP	FASCETTA
8	REC54-815504320	54-815504320	ABRAZADERA	CLAMP	FASCETTA
9	REC27-988231	27-988231	JUNTA	GASKET	GUARNIZIONE
10	REC8M0080805	8M0080805	KIT CONECTOR	CONNECTOR KIT	CONNETTORE
11	REC11-8267089	11-8267089	TUERCA	NUT	DADO
12	REC22-428611	22-428611	TAPÓN	PLUG	TAPPO
13	RM23-983571	23-983571	CASQUILLO INFERIOR	BUSHING - LOWER	BOCCOLA INFERIORE
14	RM23-98356	23-98356	CASQUILLO SUPERIOR	BUSHING - UPPER	BOCCOLA SUPERIORE
15	REC41802	41802	RETÉN	SEAL	TENUTA
16	REC41674T	41674T	CASQUILLO	INSERT	BOCCOLA
17	RM22-43828	22-43828T	CONECTOR (-OW099999	CONNECTOR (-OW099999)	PIPETTA (-OW099999)
17	RM865470	865470	CONECTOR (OW100000+)	CONNECTOR (OW100000+)	PIPETTA (OW100000+)
18	REC26-8M2005029	26-416071	RETÉN	OIL SEAL	PARAOLIO
19	REC11-34933	11-34933	TUERCA	NUT	DADO
20	REC8M0062102	32-8M0062102	TUBO DE AGUA DESIGN II	WATER HOSE DESIGN II	TUBO ACQUA DESIGN II

CABEZAL COLA
BELL HOUSING
PARTE SUPERIORE PIEDE
BRAVO

Ref.	R.O. OEM
RM53-87843	53-87843

Circlip
Circlip
Clip

Ref.	R.O. OEM
RM22-861163	22-861163

Racord 90º paso aceite
Oil racor 90º
Racordo 90º passo olio

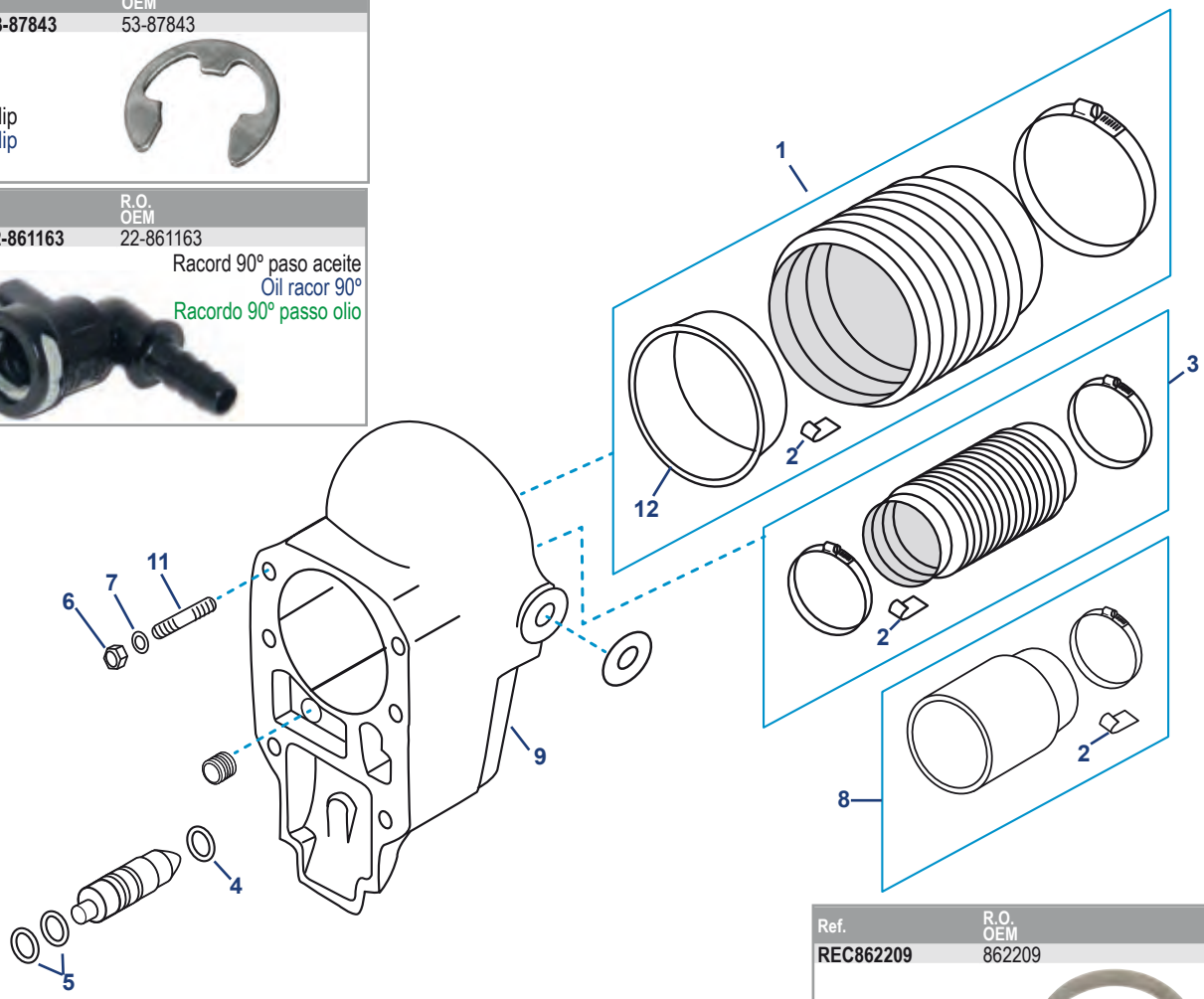

Ref.	R.O. OEM
REC862209	862209

Casquillo fuelle
Bellow Flange Ring
Anello

Ref.	R.O. OEM
REC16755Q1	16755Q1

Kit de juntas
Gasket set
Kit guarnizione

Bravo & Blackhawk

Ref.	R.O. OEM
REC23-861209A1	23-861209A1

Kit retenes
Shift shaft busing
Kit tenute

Ref.	R.O. OEM
REC22-861150T02	22-861150A1

Racor aceite
Oil racord
Racordo olio

Nº	Ref.	R.O. OEM	Descripción	Description	Descrizione
1	REC86840A05	86840A05	FUELLE TRANSON	U-JOINT BELLOW	CUFFIA TRANSON
2	REC54-86049	54-86049	CLIP	CLIP	CLIP
3	REC18654A1	18654A1	FUELLE ESCAPE	EXHAUST BELLOW	CUFFIA SCARICO
4	REC25-62705	25-62705	ARO	O-RING	ANELLO
5	REC25-48171	25-48171	ARO	O-RING	ANELLO
6	REC11-34933	11-859116	CIERRE	LOCKNUT	CHIUSURA
7	REC12-45176	12-35935	ARANDELA	WASHER	RONDELLA
8	REC78458A1	78458A1	TUBO ESCAPE	EXHAUST TUBE	TUBO DI SCARICO
9	RM41646A9	41646A9	CAMPANA BRAVOI, II, III	BRAVO I, II, III BELL HOUSING	CAMPANA BRAVO I, II, III
11	REC16-59579	16-59579	TORNILLO	SCREW	VITE
12	REC862209	862209	CASQUILLO FUELLE	BELLOW FLANGE RING	ANELLO

SOPORTE TRANSOM
GIMBAL HOUSING RING ASSEMBLY
SUPPORTO TRANSOM
BRAVO ONE (I, II, III)

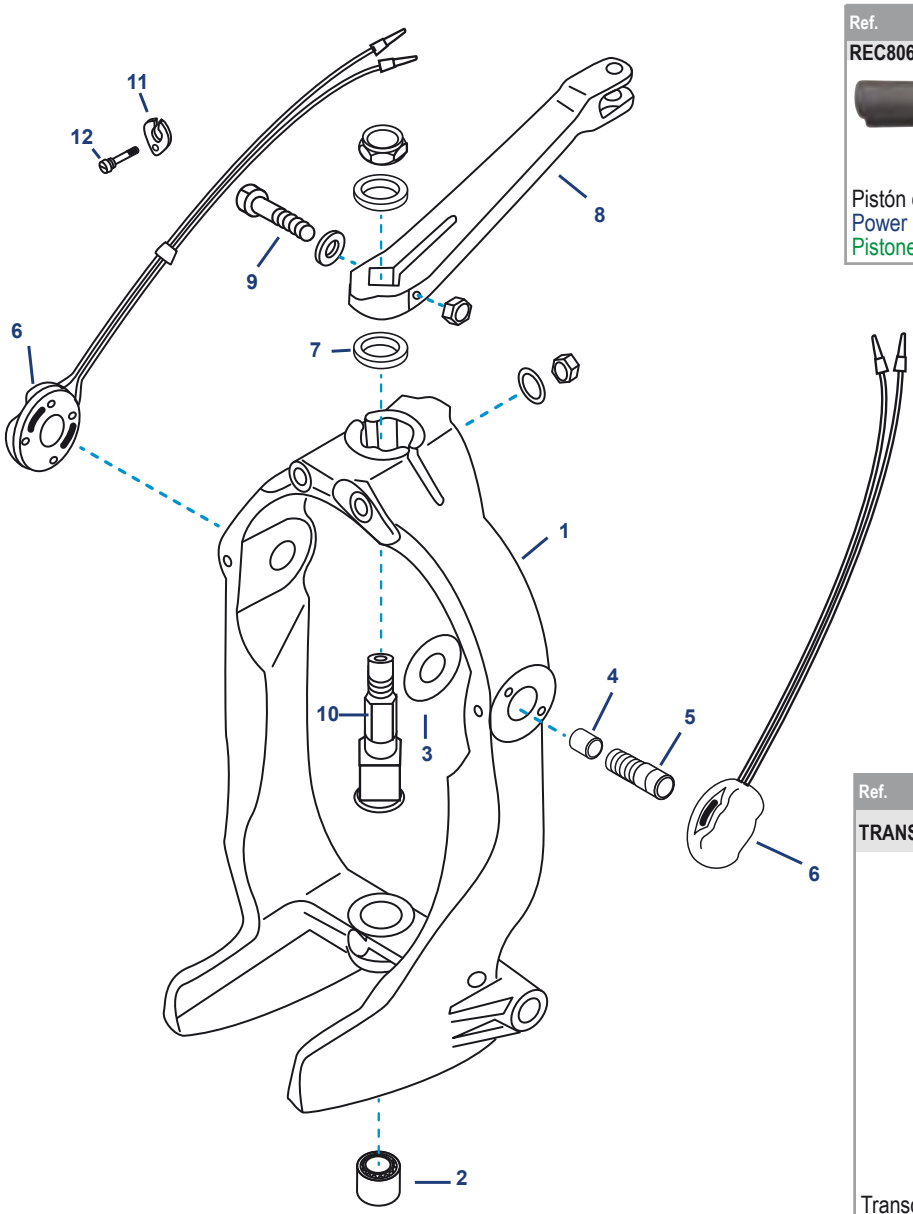

Ref.	R.O. OEM
REC806034A1	866200A01

Pistón dirección moderna (1991+)
Power steering piston (1991+)
Pistone sterzo moderno (1991+)

Ref.	R.O. OEM
TRANSONBRAVO	6-6211002NZ 6-6311002NZ

Transom Completo
Transom Assembly
Transom Completo

Nº	Ref.	R.O. OEM	Descripción	Description	Descrizione
1	RM8M0062440	8M0062440	SOPORTE TRANSOM	GIMBAL RING ASSEMBLY	SUPPORTO TRANSOM
2	RM23-847638	23-847638	COJINETE MAGNUM	BEARING MAGNUM	CUSCINETTO MAGNUM
2	RM23-99352	23-99352	COJINETE ESTÁNDAR	BEARING STANDARD	CUSCINETTO STANDARD
3	RM12-41721	12-41721	ARANDELA	WASHER	RONDELLA
4	REC23-847637	23-847637	CASQUILLO	BUSHING	BOCCOLA
5	REC10-86801	10-86801	TORNILLO (1998+)	SCREW (1998+)	VITE (1998+)
6	REC805320A03	805320A03	KIT SENSORES TRIM	TRIM SENSOR KIT	KIT SENSORI TRIM
7	RM12-98548	98548	ARANDELA	WASHER	RONDELLA
8	RM866322A01	866322A01	BIELA DIRECCIÓN	LEVER ASSY	BIELLA STERZO
9	RM10-807204	10-807204	TORNILLO	SCREW	VITE
10	REC98230A1	98230A1	EJE	SHAFT	ASSE
11	RM54-12078	54-12078	ABRAZADERA	CLAMP	FASCETTA
12	RM10-28635	10-28635	TORNILLO	SCREW	VITE

KITS DE JUNTAS
GASKETS SETS
KIT GUARNIZIONI

Ref.	R.O. OEM
REC27-54014Q1	27-54014Q1

MOTORES / ENGINES / MOTORI
TR/TRS

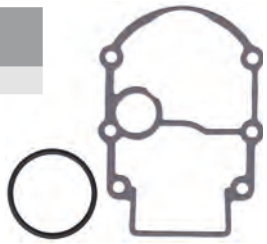

Ref.	R.O. OEM
REC87580	

MOTORES / ENGINES / MOTORI
TR/TRS

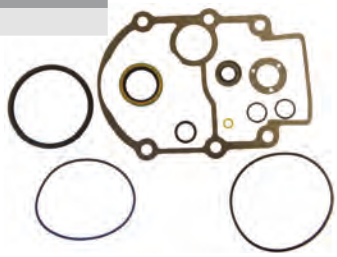

Ref.	R.O. OEM
REC16755Q1	16755Q1

MOTORES / ENGINES / MOTORI
Bravo

Ref.	R.O. OEM
REC27-64818Q4	27-64818Q4

MOTORES / ENGINES / MOTORI
MC1/120 - 260

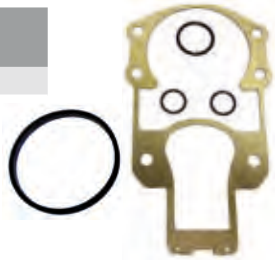

Ref.	R.O. OEM
REC27-94996Q2	27-94996Q2

MOTORES / ENGINES / MOTORI
MC1/R/MR/Alpha One/Gene II

CABLE CAMBIO
SHIFT CABLE ASSY
CAVO CAMBIO

Ref.	R.O. OEM
REC21470	

MOTORES / ENGINES / MOTORI
MCM
Modelos modernos
Newer models
Modello moderno

Ref.	R.O. OEM
REC865436A02	865436A02
RM19543A10	ORIGINAL

MOTORES / ENGINES / MOTORI
MCM
Modelos modernos
Newer models
Modello moderno

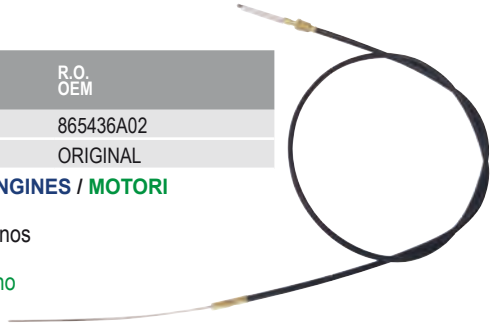

Ref.	R.O. OEM
REC865437A02	865437A02

MOTORES / ENGINES / MOTORI
Bravo I, II, III

KIT CABLE CAMBIO
SHIFT CABLE ASSY KIT
KIT CAVO CAMBIO

Ref.	R.O. OEM
REC865436A03	

MOTORES / ENGINES / MOTORI
MC1/R/MR/Alpha One/Gene II

Ref.	R.O. OEM
REC815471T1	815471T1

MOTORES / ENGINES / MOTORI
Bravo I, II, III

SOPORTE MOTOR
ENGINE MOUNT SCREW
SUPPORTI MOTORE

Ref.	R.O. OEM	TORNILLO SCREW VITE
GS38105	814263A1	19 mm = 3/4"
GS38122	35852	16 mm = 5/8"

ACOPLAMIENTOS MOTOR
ENGINE COUPLER ASSEMBLIES
ACCOPPIAMENTO MOTORE

Ref.	R.O. OEM
REC76850A2	76850A2

Se usa en todos los Chevys antiguos en los que el retén trasero del cigüeñal es de dos piezas.
Used on all older Chevy engines with 2 piece rear main seals.
Si usa in tutti i Chevy con paraolio posteriore in Si usa in tutti i Chevy vecchio con paraolio posteriore in 2 pz. 4 cil V6 e V8.

GM MR / ALPHA / BRAVO

Ref.	R.O. OEM
REC69354A2	69354A2

MOTORES / ENGINES / MOTORI
470, 485
Serie 42208730-6218036 (1976-82)

Ref.	R.O. OEM
REC97432A2	97432A2

MOTORES / ENGINES / MOTORI
165, 170, 470,180, 190, 488, 3.7LX ,3.7L
Serie 6170297+
(1983-89)

Ref.	R.O. OEM
REC18643A7	18643A7

MOTORES / ENGINES / MOTORI
V6 & V8
Con volante grande 14”
For engines with 14” flywheel
Con volano grande 14”

Ref.	R.O. OEM
REC12632A7	12632A7

MOTORES / ENGINES / MOTORI
4L

Con volante pequeño 12 3/4”
For engines with 12 3/4” flywheel
Con volano piccolo 12 3/4”

Ref.	R.O. OEM
REC861523A9	861523A9

MOTORES / ENGINES / MOTORI
5.7, 7.4, 454 Magnum & 502
Con colas Bravo
Engines with Bravo drives
Piedi Bravo

Ref.	R.O. OEM
REC59826A3	59826A3

MOTORES / ENGINES / MOTORI
Ford

Ref.	R.O. OEM
REC14505A2	14505A2

MOTORES / ENGINES / MOTORI
Utilizado al reemplazar V6 o V8, 2 piezas de retén trasero con perno de cigüeñal de 3 1/2”, retén trasero de 1 pieza con perno de 3”.
Used when replacing V6 or V8, 2 pieces rear main seal with 3 1/2” crankshaft bolt pattern to a newer 1 piece rear main seal engine with 3” bolt pattern.
Utilizzato per sostituire V6 o V8, paraolio posteriore in 2 pezzi con perno dell’albero motore con 3 1/2”, perno posteriore de 1 pezzo da 3”.

KITS MONTAJE
ENGINE MOUNT KIT
KIT RIPARAZIONE ACCOPPIAMENTO

Ref.	R.O. OEM
REC10-97934A1	10-97934A1

Ref.	R.O. OEM
REC21811	

KITS SILEMBLOCKS

Ref.	R.O. OEM
REC865329A02	865329A02

COMPONENTES SILEMBLOCK
SILEMBLOCK COMPONENTS
COMPONENTI SILEMBLOCK

Ref.	R.O. OEM			
REC23-99322	23-99322	ESPACIADOR	SPACER	DISTANZIALE
REC23-99299	23-99299	ESPACIADOR	SPACER	DISTANZIALE
REC12-32834	12-32834	ARANDELA FIBRA	FIBRE WASHER	RONDELLA FIBRA
REC12-35777	12-35777	ARANDELA	WASHER	RONDELLA
REC10-97934	10-97934	TORNILLO	SCREW	VITE
REC11-863332	11-863332	CIERRE	LOCK	CHIUSSURA
REC13-33734	13-33734	MUELLE	SPRING	MOLLA

REC23-99322

REC23-99299

REC12-32834

REC12-35777

REC11-863332

REC13-33734

REC10-97934

KIT FUELLE TRANSOM
TRANSOM U-JOINT BELLOWS KIT
KIT CUFFIE TRANSOM

Ref.	R.O. OEM
REC60932A4	60932A4
CEF500516K	60932A1

MOTORES / ENGINES / MOTORI
1/R/Alpha One (3469428+)

Ref.	R.O. OEM
REC36223A2	36223A2
CEF500522K	36223 36223A1

MOTORES / ENGINES / MOTORI
Colas antiguas
Old styles drives
Piedi vecchio
(-3443920)

Ref.	R.O. OEM
REC86840A05	8M0062406
CEF500509K	86840A3 86840A05

MOTORES / ENGINES / MOTORI
Bravo & Blackhawk

Ref.	R.O. OEM
REC816431A1	816431A1
CEF500515K	

MOTORES / ENGINES / MOTORI
Alpha One Gen II

KIT FUELLE CABLE CAMBIO
SHIFT CABLE BELLOW SET
KIT CUFFIA CAMBIO

Ref.	R.O. OEM
REC74639Q02	74639Q02
CEF500513K	

MOTORES / ENGINES / MOTORI
Alpha & Bravo

CLIP FUELLE
BELLOW CLIP
CLIP CUFFIE

Ref.	R.O. OEM
REC54-86049	54-86049

ABRAZADERA FUELLE CAMBIO
SHIFT CABLE BELLOW CLAMP
FASCETTA CUFFIE CAMBIO

Ref.	R.O. OEM	FUELLE BELLOW CUFFIA
REC54-38863	54-38863	REC74639Q02

Ref.	R.O. OEM	FUELLE BELLOW CUFFIA
REC54-815504320	54-815504320	REC74639Q02

MANGUITO DE ESCAPE
EXHAUST TUBE
TUBO DI SCARICO

Ref.	R.O. OEM
REC78458A1	78458A1
CEF500520K	78458

MOTORES / ENGINES / MOTORI
Bravo I, II & III

Ref.	R.O. OEM
REC18654A1	18654A1
CEF500512K	32734 32734A3

MOTORES / ENGINES / MOTORI
Alpha & Bravo

PROTECTORES SALIDA ESCAPE
EXHAUST PROTECTOR VALVES
PROTEZIONE SCARICO

Ref.	R.O. OEM	Ø
REC34765A2	34765A2	76 mm = 3”
REC12644A1	12644A1	101 mm = 4”
REC89260		127 mm = 5” 152 mm = 6”

REC34765A2

REC12644A1

REC89260

COMPONENTES CAMBIO
SHIFT COMPONENTS
COMPONENTI CAMBIO

EJE CABLE CAMBIO SUPERIOR
UPPER SHIFT SHAFT
ALBERINO SUPERIORE CAMBIO

Ref.	R.O. OEM
REC45589A3	45589A3

MOTORES / ENGINES / MOTORI
MC-1/R/MR/Alpha One

Ref.	R.O. OEM
REC816685	816685

MOTORES / ENGINES / MOTORI
Alpha One Gen II

EJE CABLE CAMBIO INTERMEDIO
INTERMEDIATE SHIFT SHAFT
ASSE INTERMEDIO CAMBIO

Ref.	R.O. OEM
REC621041	621041

MOTORES / ENGINES / MOTORI
MC-1/R/MR/Alpha One

EJE YOKE
YOKE SHAFT
ASSE YOKE

Ref.	R.O. OEM
REC12711	12711

MOTORES / ENGINES / MOTORI
Bravo I, II & III

TORNILLO
SCREW
VITE

Ref.	R.O. OEM
REC10-45590	10-45590
REC10-31700	10-31700

MOTORES / ENGINES / MOTORI
MC-1 / R / MR / Alpha One / Alpha One Gen II

REC10-45590

REC10-31700

PASADOR
PIN
SPINOTTO

Ref.	R.O. OEM
REC45518A3	45518A3

MOTORES / ENGINES / MOTORI
MC-1 / R / MR / Alpha One / Alpha One Gen II

KIT CAMBIO
SHIFT LEVER KIT
KIT CAMBIO

Ref.	R.O. OEM
REC45518T1	45518T1

MOTORES / ENGINES / MOTORI
MC-1/R/MR/Alpha One / Alpha One Gen II

KIT RETÉN
SEAL KIT
KIT TENUTE

Ref.	R.O. OEM
REC23-806036A1	23-806036A1

MOTORES / ENGINES / MOTORI
Alpha One Gen II (F094775+)

Ref.	R.O. OEM
REC23-805041A2	23-805041A2

MOTORES / ENGINES / MOTORI
MC-1 / R/ MR/ Alpha One / Alpha One Gen II

Ref.	R.O. OEM
REC23-861209A1	23-861209A1

MOTORES / ENGINES / MOTORI
Bravo I, II & III

ACOPLE CABLE
CABLE SLIDE
ACCOPIAMENTO CAVO

Ref.	R.O. OEM
REC8507522	8507522

MOTORES / ENGINES / MOTORI
MC-1 / R / MR / Alpha One / Alpha One Gen II

GUÍA CABLE
CABLE GUIDE
GUIDA CAVO

Ref.	R.O. OEM
REC02644	

ANCLAJE CABLE
CABLE ANCHOR
FERMA CAVO

Ref.	R.O. OEM
REC43436	43436

Se instala en guía de cable REC02644
Installed in cable guide REC02644
Viene installato nei passacavi REC02644

TORNILLO PARA ANCLAJE REC43436
SCREW FOR REC43436
VITE PER REC43436

Ref.	R.O. OEM
REC10-20518	10-20518

BRAZOS POWER TRIM Y MANGUERAS HIDRÁULICAS
MODELS POWER TRIM ARMS & POWER STEERING HOSES
PISTONI POWER TRIM E TUBI IDRAULICI

120-140-165-228-250-260-470-485-888-898

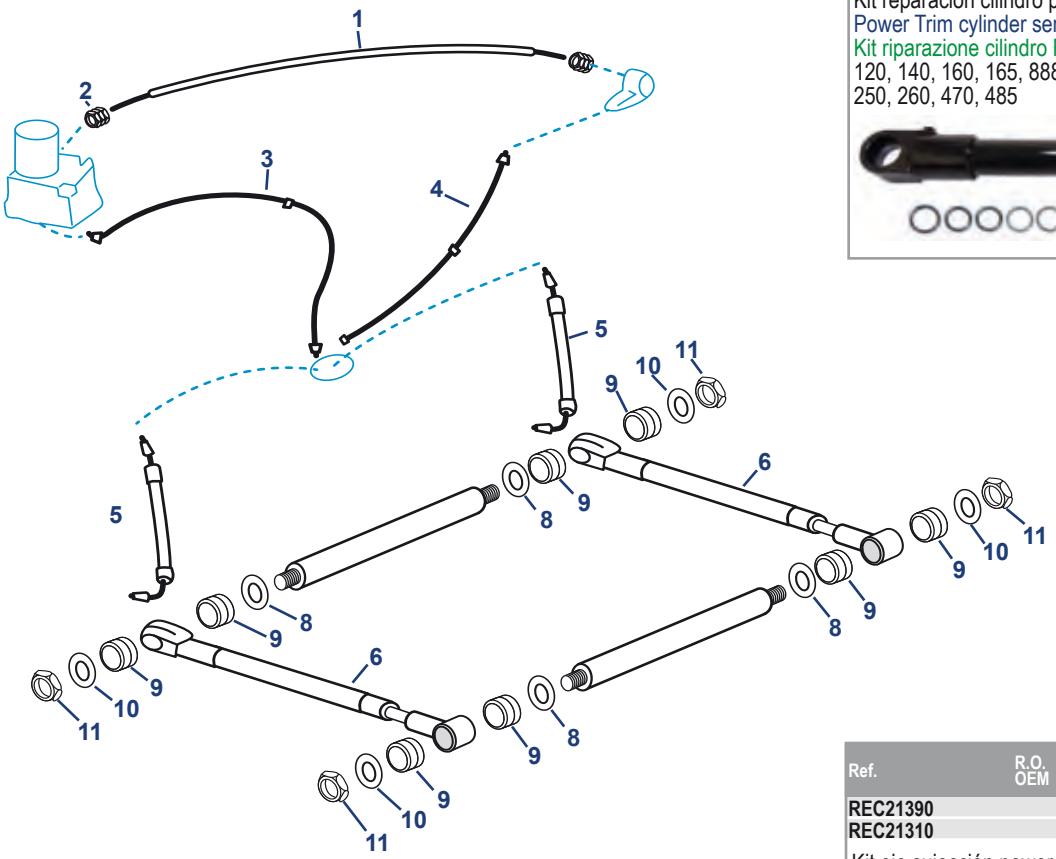

Ref.	R.O. OEM
REC21990	

Kit reparación cilindro power Trim
Power Trim cylinder service kit
Kit riparazione cilindro Power Trim
120, 140, 160, 165, 888, 898, 228, 225-S, 233, 250, 260, 470, 485

Ref.	R.O. OEM	EJE RAM ASSE
REC21390		19 cm
REC21310		26 cm

Kit eje sujección power trim Para colas antiguas con gruesos pequeños en el eje de sujección delantero.
Power trim ram bushing kit for front anchor pin on early Mercruisers with small rubber bushings.
Kit Power trim. Per vecchie piedi con piccoli spessori sull'asse di fissaggio anteriore
MC1 120-260

Ref.	R.O. OEM
REC25-60342A2	25-60342A2

Kit de aros y tubo
O-ring kit & tube
Kit anelli e tubi

Ref.	R.O. OEM
REC77442A1	77442A1

Cuerpo cilindro power trim
Power trim cylinder housing kit
Corpo cilindro Power Trim
MC1 (1970-80)

Nº	Ref.	R.O. OEM	Descripción	Description	Descrizione
1	REC32-58432A2	32-58432A2	LATIGUILLO TRIM (V8)	TRIM HOSE ASSEMBLY (V8)	TUBO TRIM (V8)
2	RM22-49718	22-49718	TUERCA TUBO	NUT HOSE	DADO TUBO
3	REC32-55816	33-55816	LATIGUILLO TRIM (INLINE)	TRIM HOSE (INLINE)	TUBO TRIM (INLINE)
3	REC32-59841	32-59841	LATIGUILLO TRIM (Conector a bomba) V-8	TRIM HOSE (Connector to pump) V-8	TUBO TRIM (Connettore a pompa) V8
4	REC32-59842	32-59842	LATIGUILLO TRIM	TRIM HOSE	TUBO TRIM
5	REC32-86036	32-86036	LATIGUILLO TRIM	TRIM HOSE	TUBO TRIM
6	REC45706A14	45706A14	BRAZO TRIM	TRIM CYLINDER	BRACCIO TRIM
8		12-45737	ARANDELA	WASHER	RONDELLA
9	REC23-89574	23-89574	ADAPTADOR GOMA	POWER TRIM RAM BUSHING	ADATTATORE IN GOMMA
10	REC12-46765	12-46765	ARANDELA	WASHER	RONDELLA
11	REC11-862903	82671013	TUERCA ACERO INOX	LOCK NUT	DADO ACCIAIO INOX

R/MR/ALPHA ONE (1983-90)

Ref.	R.O. OEM
REC8M0080805	8M0080805

Kit conector Trim
Trim connector kit
Kit connettore Trim

Ref.	R.O. OEM
REC87399A2	87399A2

Kit reparación Trim
Power trim cylinder overhaul kit
Kit riparazione cilindro
ALPHA ONE Gen I

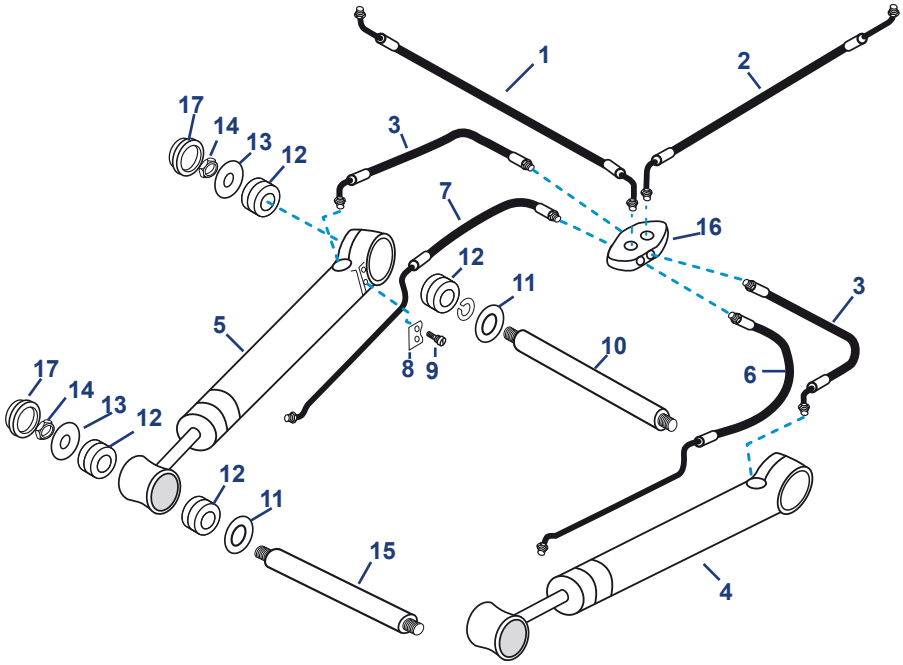

Ref.	R.O. OEM
REC88035	88035

Tapón cilindro Power Trim
Power trim ram end cap
Tappo cilindro Power Trim
Ø 52,8 mm (ext)

Ref.	R.O. OEM	EJE RAM ASSE
REC21380	17-14872A1	23 cm
REC21370	17-14873A1	30 cm

KIT EJE SUJECCIÓN POWER TRIM
Para colas con gruesos grandes en los ejes de sujección
POWER TRIM RAM BUSHING KIT
For rear anchor pin on late Mercruisers with large rubber bushings
KIT ASSE POWER TRIM
Per code con grandi spessori sugli alberi

Nº	Ref.	R.O. OEM	Descripción	Description	Descrizione
1	REC32-861127	32-861127	LATIGUILLO TRIM (-OW099999)	TRIM HOSE (-OW099999)	TUBO TRIM (-OW099999)
2	REC32-861128	32-861128	LATIGUILLO TRIM (-OW099999)	TRIM HOSE (-OW099999)	TUBO TRIM (-OW099999)
3	REC32-99904	32-99904Q	LATIGUILLO TRIM	TRIM HOSE	TUBO TRIM
4	REC98704A3	98704A3	BRAZO TRIM ESTRIBOR (395 mm)	TRIM CYLINDER STBD (395 mm)	PISTONE TRIM TRIBORDO (395 mm)
4	REC14034A3	14034A3	BRAZO TRIM ESTRIBOR (411 mm) Negro	TRIM CYLINDER STBD (411 mm) Black	PISTONE TRIM TRIBORDO (411 mm) Nero
5	REC98703A3	98703A3	BRAZO TRIM BABOR (395 mm)	TRIM CYLINDER PORT (395 mm)	PISTONE TRIM BABORDO (395 mm)
5	REC14035A3	14035A3	BRAZO TRIM BABOR (411 mm) Negro	TRIM CYLINDER PORT (411 mm) Black	PISTONE TRIM BABORDO (411 mm) Nero
6	REC32-864589	32-864589	LATIGUILLO TRIM PARA REC98704A3	TRIM HOSE FOR REC98704A3	TUBO TRIM PER REC98704A3
6	REC32-864960	32-864960	LATIGUILLO TRIM PARA REC14034A3	TRIM HOSE FOR REC14034A3	TUBO TRIM PER REC14034A3
7	REC32-864588	32-864588	LATIGUILLO TRIM PARA REC98703A3	TRIM HOSE FOR REC98703A3	TUBO TRIM PER REC98703A3
7	REC32-864959	32-864959	LATIGUILLO TRIM PARA REC14035A3	TRIM HOSE FOR REC14035A3	TUBO TRIM PER REC14035A3
8	REC85060	85060	SUJECCIÓN TUBO	PLATE	SUPPORTO TUBO
9	REC10-85486	10-85486	TORNILLO	SCREW	VITE
10	REC17-14873A1	17-14873A1	EJE SUJECCIÓN (30 cm)	ANCHOR PIN	ASSE DA 30 cm
11	REC12-85058	12-85058	ARANDELA	WASHER	RONDELLA
12	REC23-99291	23-99291T	ADAPTADOR GOMA POWER	BALL GEAR NUT	ADATTATORE IN GOMMA POWER
13	REC12-44163	12-44163	ARANDELA	WASHER	RONDELLA
14	REC11-34933	11-859116	TUERCA ACERO INOX	LOCK NUT	DADO ACCIAIO INOX
15	REC17-14872A1	17-14872A1	EJE SUJECCIÓN (23 cm)	ANCHOR PIN	ASSE SUPPORTO (23 cm)
16	REC8M0080805	8M0080805	KIT CONECTOR	TRIM CONNECTOR KIT	CONNETTORE
17	REC19-14842	19-14842	TAPA PLÁSTICO	CAP	COPERCHIO IN PLASTICA

Para saber la referencia del pistón debemos revisar el nº grabado en el brazo
Number on cylinder must be checked in order to know piston reference
Per sapere il codice del pistone bisogna verificare il nº stampigliato.

ALPHA ONE GEN II (1991+)

Ref.	R.O. OEM
REC8M0080805	8M0080805

Kit conector Trim
Trim connector kit
Kit connettore Trim

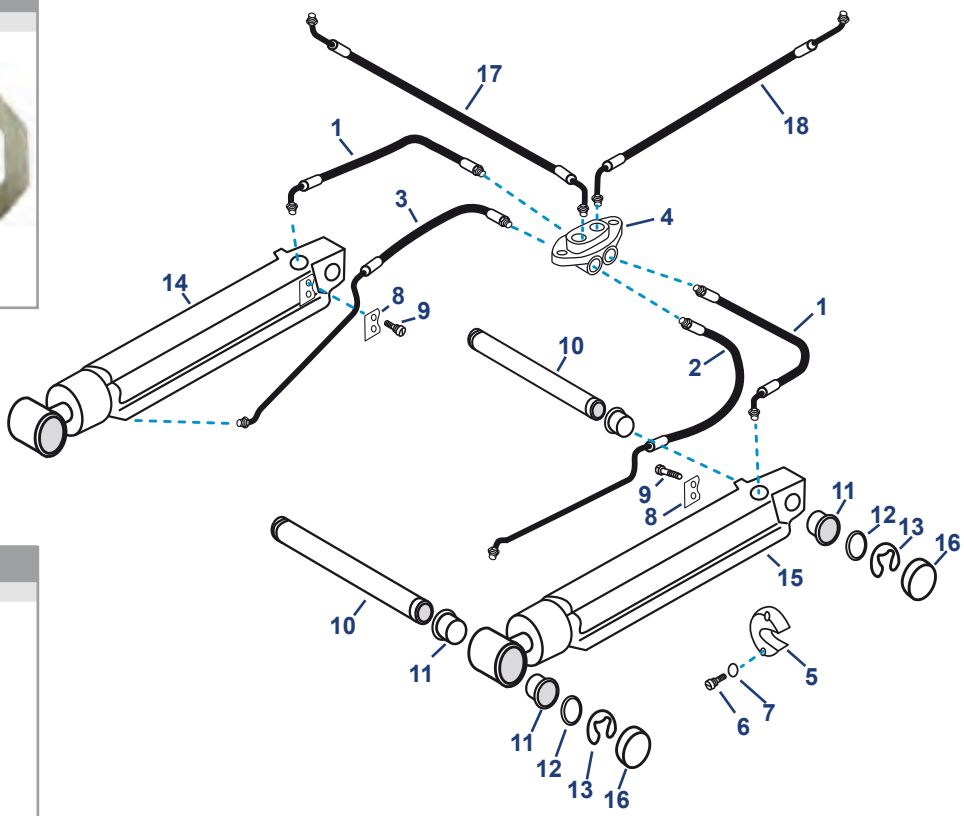

Ref.	R.O. OEM
REC806191T	806191T

Tapón cilindro Power Trim
Power trim ram end cap
Tappo cilindro Power Trim
Ø 48 mm (ext)

Ref.	R.O. OEM
REC87399A3	87399A3

Kit reparación trim
Power trim cylinder overhaul kit
Kit riparazione Trim

Ref.	R.O. OEM
REC25-87400A2	25-87400A2

Kit retenes
Power trim seal kit
Kit tenute

Ref.	R.O. OEM
REC17-8M0065070	

Kit eje sujección
Power trim ram bushing kit
Kit supporto

Nº	Ref.	R.O. OEM	Descripción	Description	Descrizione
1	REC32-99904	32-99904Q	LATIGUILLO TRIM	TRIM HOSE	TUBO TRIM
2	REC32-864960	32-864960	LATIGUILLO TRIM	TRIM HOSE	TUBO TRIM
3	REC32-864959	32-864959	LATIGUILLO TRIM	TRIM HOSE	TUBO TRIM
4	REC8M0080805	8M0080805	KIT CONECTOR	TRIM CONNECTOR KIT	KIT CONNETTORE TRIM
5	CM806189	806189Q1	ÁNODO ZINC	ZINC ANODE	ANODO ZINCO
5	CM806189A	806189Q1	ÁNODO ALUMINIO	ALUMINUM ANODE	ANODO ALLUMINIO
6	REC10-806290	10-806290	TORNILLO	SCREW	VITE
7	REC304454	13-69432	ARANDELA	WASHER	RONDELLA
8	REC85060	85060	SUJECCIÓN TUBO	PLATE	SUPPORTO TUBO
9	REC10-85486	10-85486	TORNILLO (.250 -20x.380)	SCREW (.250 -20x.380)	VITE (.250 -20x.380)
10	REC17-815953A01	17-815953A01	EJE	UPPER SHIFT SHAFT	ASSE
11	REC23-8159501	23-8159501	CASQUILLO	POWER TRIM RAM BUSHING	BOCCOLA
12	REC12-815952	12-815952	ARANDELA	WASHER	RONDELLA
13	REC53-815949	53-815949	CIERRE METÁLICO	E-RING	CHIUSURA METALLICA
14	REC815935A7	815935A7	CILINDRO TRIM BABOR	TRIM CYLINDER PORT	CILINDRO TRIM SINISTRO
15	REC815954A7	815954A7	CILINDRO TRIM ESTRIBOR	TRIM CYLINDER STBD	CILINDRO TRIM DESTRO
16	REC19-815951	19-815951	TAPA PLÁSTICO	PLASTIC CAP	COPERCHIO IN PLASTICA
17	REC32-861127	32-861127	LATIGUILLO TRIM (-OW099999) Negro	TRIM HOSE (-OW099999) Black	TUBO TRIM (-OW099999) Nero
18	REC32-861128	32-861128	LATIGUILLO TRIM (-OW099999) gris	TRIM HOSE (-OW099999) Grey	TUBO TRIM (-OW099999) Grigio

BRAVO

Ref.	R.O. OEM
REC8M0080805	8M0080805

Kit conector Trim
Trim connector kit
Kit connettore Trim

Ref.	R.O. OEM
REC806191T	806191T

Tapón cilindro Power Trim
Power trim ram end cap
Tappo cilindro Power Trim
Ø 48 mm (ext)

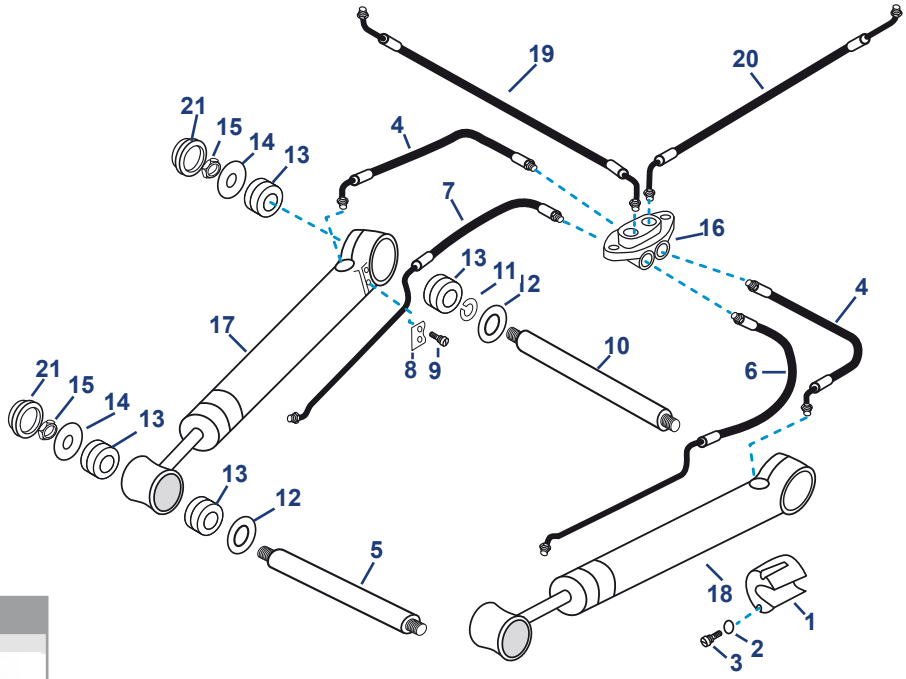

Ref.	R.O. OEM
REC87399A2	87399A2

Kit reparación trim
Power trim cylinder overhaul kit
Kit riparazione Trim

Ref.	R.O. OEM
REC25-87400A2	25-87400A2

Kit retenes
Power trim seal kit
Kit tenute

Ref.	R.O. OEM
REC14-44166T1	17-44166T1

KIT eje sujección trasero
Power trim ram bushing kit (rear)
Kit asse posteriore

Ref.	R.O. OEM
REC21920	

KIT eje sujección delantero
Power trim ram bushing kit (front)
Kit asse anteriore

Nº	Ref.	R.O. OEM	Descripción	Description	Descrizione
1	CM806190	806190A1	ÁNODO ZINC	ZINC ANODE	ANODO ZINCO
1	CM806190A	806190A1	ÁNODO ALUMINIO	ALUMINUM ANODE	ANODO ALLUMINIO
2	REC304454	13-69432	ARANDELA	WASHER	ANODO ALLUMINIO
3	REC10-806290	10-806290	TORNILLO	SCREW	VITE
4	REC32-99904	32-99904Q	LATIGUILLO TRIM	TRIM HOSE	TUBO TRIM
5	REC17-44166	17-44166	EJE SUJECCIÓN TRIM	ANCHOR PIN	ASSE TRIM
6	REC32-864589	32-864589	LATIGUILLO TRIM	TRIM HOSE	TUBO TRIM
7	REC32-864588	32-864588	LATIGUILLO TRIM	TRIM HOSE	TUBO TRIM
8	REC85060	85060	SUJECCIÓN TUBO	PLATE	SUPPORTO TUBO
9	REC10-85486	10-85486	TORNILLO	SCREW	VITE
10	REC17-44167A1	17-44167A1	EJE SUJECCIÓN TRIM	ANCHOR PIN	ASSE SUPPORTO TUBO
11	REC53-805272	53-805272	ARO RETENEDOR	RETAINING RING	ANELLO BLOCCANTE
12	REC12-44164	12-44164	ARANDELA	WASHER	RONDELLA
13	REC23-807073	23-807073	ADAPTADOR GOMA P.T.	P.T. RAM BUSHING	ADATTATORE GOMMA
14	REC12-44163	12-44163	ARANDELA	WASHER	RONDELLA
15	REC11-34933	11-859116	TUERCA INOX	LOCK NUT	DADO INOX
16	REC8M0080805	8M0080805	KIT CONECTOR	TRIM CONNECTOR KIT	CONNETTORE
17	REC98703A26	98703A26	PISTÓN TRIM BABOR	TRIM CYLINDER PORT	PISTONE TRIM SINISTRO
18	REC98704A26	98704A26	PISTÓN TRIM ESTRIBOR	TRIM CYLINDER STBD	PISTONE TRIM DESTRO
19	REC32-861127	32-861127	LATIGUILLO TRIM NEGRO (-OW099999)	TRIM HOSE BLACK (-OW099999)	TUBO TRIM NERO (-OW099999)
20	REC32-861128	32-861128	LATIGUILLO TRIM GRIS (-OW099999)	TRIM HOSE GRAY (-OW099999)	TUBO TRIM GRIGIO (-OW099999)
21	REC19-14842	19-14842	TAPA PLÁSTICO	PLASTIC CAP	COPERCHIO IN PLASTICA

LATIGUILLOS POWER TRIM
POWER TRIM HOSES
TUBI POWER TRIM

REF.	R.O. OEM	CONECTOR FITTING CONNETTORI	LARGO LONG LUNGHEZZA
REC32-864960	32-99902-1 32-864960	1/8"	11 1/2" + 14"
REC32-864589	32-99902 32-864589	1/8"	11 1/2" + 14"

MOTORES / ENGINES / MOTORI
MCM 120-260 & BRAVO

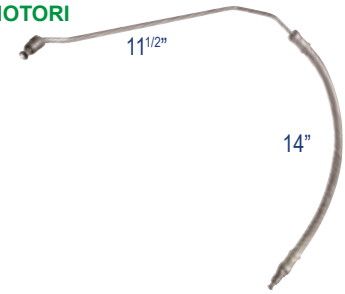

REF.	R.O. OEM	CONECTOR FITTING CONNETORI	LARGO LONG LUNGO
REC32-864959	32-99903-1 32-864959	1/8"	11 1/2" + 14"
REC32-864588	32-99903 32-864588	1/8"	11 1/2" + 14"

MOTORES / ENGINES / MOTORI
MCM 120-260 & BRAVO
1/8"

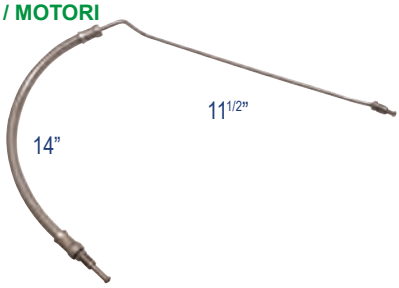

REF.	R.O. OEM	CONECTOR FITTING CONNETORI	LARGO LONG LUNGO
REC32-87234	32-87234	1/8"	11 1/2" + 14"

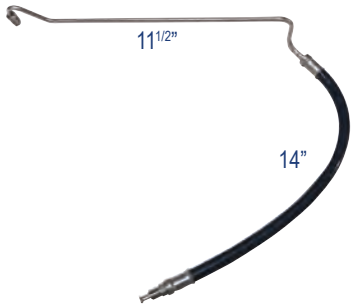

REF.	R.O. OEM	CONECTOR FITTING CONNETORI	LARGO LONG LUNGO
REC32-87235	32-87235	1/8"	11 1/2" + 14"

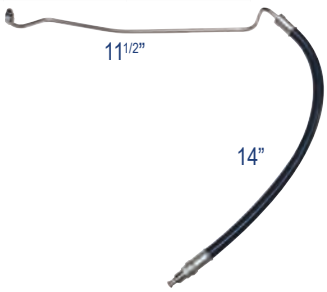

REF.	R.O. OEM	CONECTOR FITTING CONNETORI	LARGO LONG LUNGO
REC32-86036	32-86036 32-86036Q	1/8"	14"

REF.	R.O. OEM		CONECTOR FITTING CONNETORI	LARGO LONG LUNGO
REC32-861127	32-861127 32-95858	■	1/8"	46"
REC32-861128	32-861128 32-95859	■	1/8"	51"

MOTORES / ENGINES / MOTORI
R / MR / ALPHA GEN II / BRAVO I, II, III / BRAVO X, XR, XZ
(-0W099999)
sin conectores rápidos
without quick connect fittings
senza connettori rapidi

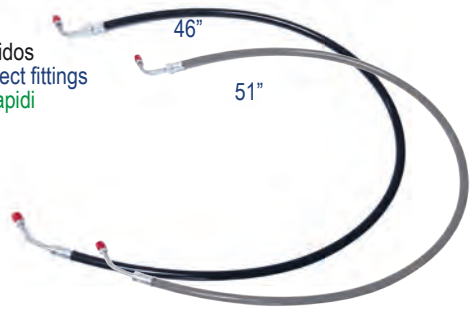

REF.	R.O. OEM	CONECTOR FITTING CONNETORI	LARGO LONG LUNGO
REC32-99904	32-99904	1/8"	15"

REF.	R.O. OEM	CONECTOR FITTING CONNETORI	LARGO LONG LUNGO
REC32-55816	32-55816	1/8"	21"

REF.	R.O. OEM	CONECTOR FITTING CONNETORI	LARGO LONG LUNGO
REC32-59841	32-59841	1/8"	51"

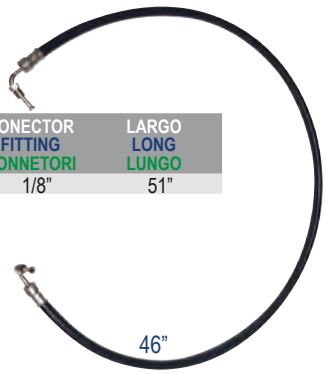

REF.	R.O. OEM	CONECTOR FITTING CONNETORI	LARGO LONG LUNGO
REC32-59842	32-59842	1/8"	32"

REF.	R.O. OEM	CONECTOR FITTING CONNETORI
REC32-58432A2	32-58432A2	

CARBURADORES
CARBURETORS
CARBURATORI

CARBURADORES REMANUFACTURADOS
REBUILT CARBURETORS
CARBURATORI RIGENERATI

ROCHESTER

Ref.	R.O. OEM	CUERPOS BBL CORPI
REC3304-9354A2	3304-9354A2 1347-804623R1 1347-804623R02	4

ROCHESTER

Ref.	R.O. OEM	CUERPOS BBL CORPI
REC1347-9661A3	1347-9661A3 1347-8296A4 1347-7361A1 1347-7364A1	4

ROCHESTER

Ref.	R.O. OEM	CUERPOS BBL CORPI
REC804626R02	1347-8288A1 1347-804626R1 804626R02 1347-6493A1 1347-8291A3 1347-7363A1 1347-7366A	4

ROCHESTER

Ref.	R.O. OEM	CUERPOS BBL CORPI
REC982217	1347-818620 1347-818620R02 1351-7355A1 1347-8186201 1351-4032A1 1351-5203A1	2

ROCHESTER

Ref.	R.O. OEM	CUERPOS BBL CORPI
REC1348-818621R02	1348-818621 1348-818621R02 1347-8186211 1347-818621R02 1351-8480A2	2

ROCHESTER

Ref.	R.O. OEM	CUERPOS BBL CORPI
REC1376-818622R02	1376-818622R02 1347-818622 1376-5659A1 1347-8186221 1376-5744A1 1376-6152A1	2

NEW

ROCHESTER

Ref.	R.O. OEM	CUERPOS BBL CORPI
REC1347-818619R02	1347-818619 1347-818619R02 1347-8186191 1351-4263A1 1351-7354A1 1336-3594A1 1351-4263A2 1351-4263A3 1351-5202A1 1351-6065A2	2

ROCHESTER

Ref.	R.O. OEM	CUERPOS BBL CORPI
REC3310-807312A1	3310-807312A1 3310-807312R02 1389-9670A2	2

WEBER (CARTER)

Ref.	R.O. OEM	CUERPOS BBL CORPI
REC807262R02	3310-806969A1 807262R02 3310-8M0047212 3310-806969R01	4

CARBURADORES NUEVOS
NEW CARBURETORS
CARBURATORI NUOVI

HOLLEY

Ref.	R.O. OEM	CUERPOS BBL CORPI
MP426422		2

MOTORES / ENGINES / MOTORI
4.3L
500 CFM

HOLLEY

Ref.	R.O. OEM	CUERPOS BBL CORPI
MP426574		4

MOTORES / ENGINES / MOTORI
5.7 L
600 CFM

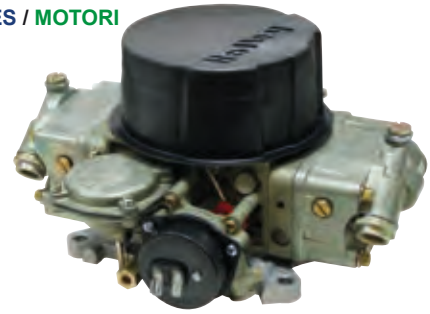

HOLLEY

Ref.	R.O. OEM	CUERPOS BBL CORPI
MP426434		4

MOTORES / ENGINES / MOTORI
4.3 L
600 CFM

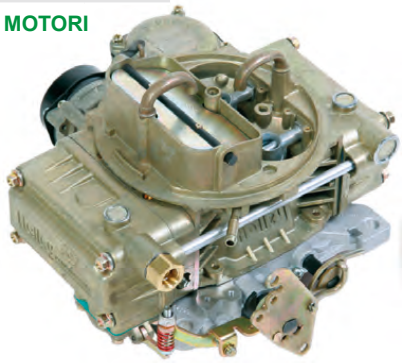

HOLLEY

Ref.	R.O. OEM	CUERPOS BBL CORPI
MP426766		4

MOTORES / ENGINES / MOTORI
7.4 L
750 CFM

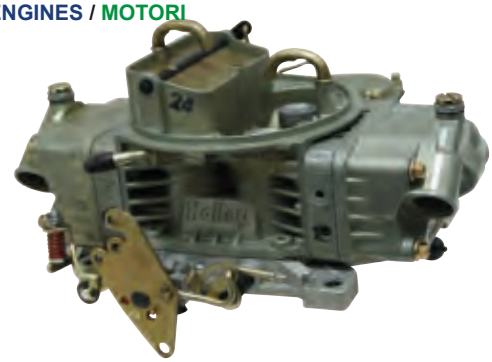

WEBER, EDELBROCK, CARTER AFB

Ref.	R.O. OEM	CUERPOS BBL CORPI
REC9-34081		4

MOTORES / ENGINES / MOTORI
V8 750 CFM
Reemplaza la mayoría de carburadores.
Replaces most carburetors.
Sostituisce la maggior
parte dei carburatori.

TKS

Ref.	R.O. OEM	CUERPOS BBL CORPI
REC3310-866143A03	3310-866143A03	2

NEW

MOTORES / ENGINES / MOTORI
5.7L
0M600000 - 0W300009
0W300010+

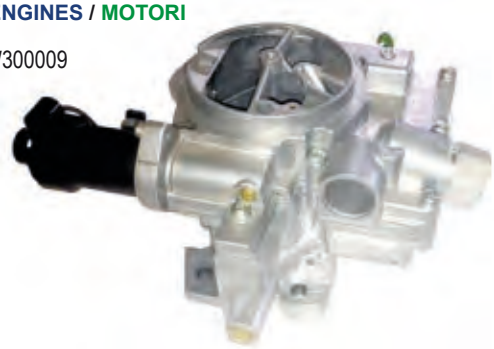

TKS

Ref.	R.O. OEM	CUERPOS BBL CORPI
REC3310-866142A04	3310-866142A04	2

NEW

MOTORES / ENGINES / MOTORI
5.0L
0M600000 - 0W300009
0W300010+

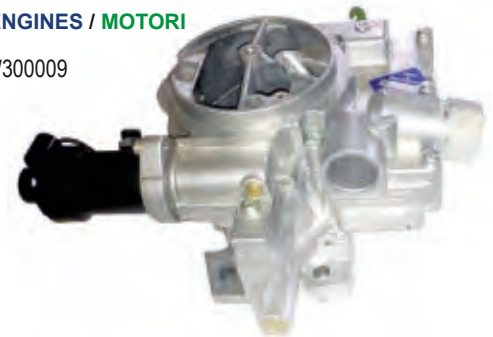

Q-JET

Ref.	R.O. OEM	CUERPOS BBL CORPI
REC1347-816373A4	1347-816373A4 1347-804624R02 3310-804624R1 1347-6492A1 1347-7362A1 1347-8292A4 1347-9662A4 1347-9415T	4

NEW

MOTORES / ENGINES / MOTORI
MCM 260, 350 MAG, 5.0L, 5.0LX,
5,7. (1982 - 95)

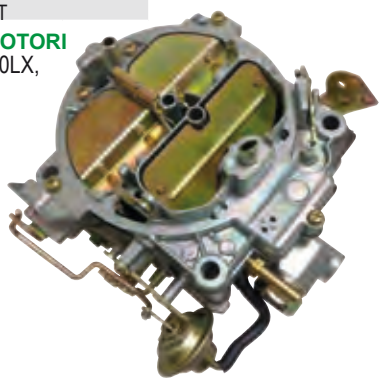

MERCARB

Ref.	R.O. OEM	CUERPOS BBL CORPI
REC3310-864941A01	3310-864941A01	2

NEW

MOTORES / ENGINES / MOTORI
4.3L (2002-04)
(OM615000-OW300012)

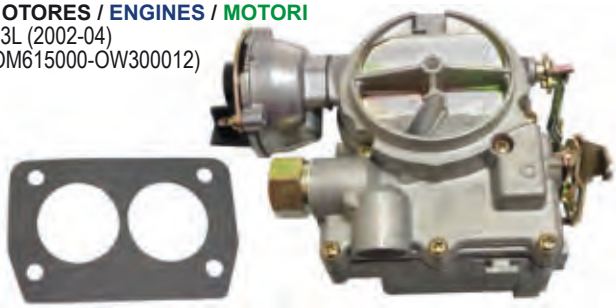

MERCARB

Ref.	R.O. OEM	CUERPOS BBL CORPI
REC3310-864943A01	3310-864943A01 3310-861245A1	2

NEW

MOTORES / ENGINES / MOTORI
5.7 GM350 V8 (1998-01)
5.7 CARB ALPHA BRAVO
5.7 CARB MIE
5.7 CARB SKY
5.7 COMPETITION SKI (GEN+) GM 350 V8 (1998)
5.7L
1998+

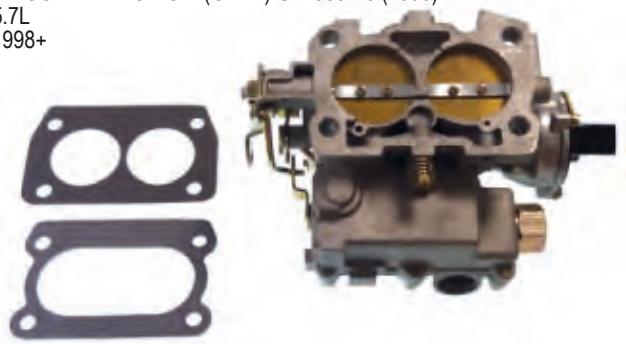

MERCARB

Ref.	R.O. OEM	CUERPOS BBL CORPI
REC3310-864942A01	3310-864942A01 3310-861448A1	2

NEW

MOTORES / ENGINES / MOTORI
5.0L ALPHA/BRAVO (-0M623982)
5.0L ALPHA/BRAVO (0M623983+)
5.0L (1998-04)

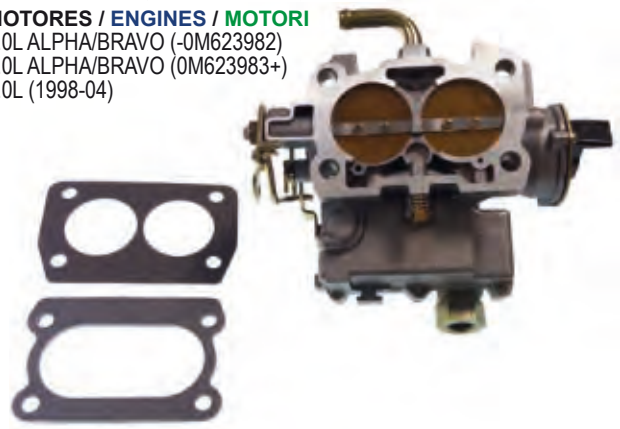

KITS ADAPTADORES CARBURADOR
CARBURETOR ADAPTER KITS
KIT ADATTATORE CARBURATORI

KIT ADAPTADOR CARBURADOR HOLLEY
HOLLEY CARBURETOR ADAPTER KIT
KIT ADATTATORE CARBURATORE HOLLEY

Ref.	R.O. OEM
RECHOL17-6	

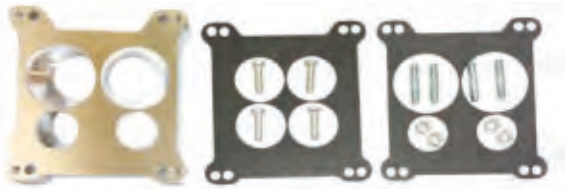

KIT ADAPTADOR CABLE MCM A HOLLEY
MCM TO HOLLEY ADAPTER CABLE KIT
KIT ADATTATORE CAVI MCM A HOLLEY

Ref.	R.O. OEM
RECHOL717-7	

TUBO COMBUSTIBLE BOMBA A CARBURADOR
FUEL TUBE FROM PUMP TO CARBURETOR
TUBO DA COMBUSTIBILE A POMPA CARBURATORI

Ref.	R.O. OEM	ROSCA THREAD PASSO
REC18-8115		3/8" x 25 - 5/8"
REC18-8114		3/8" x 31" - 5/8"

KITS TORNILLOS CARBURADOR
CARBURETORS SCREW KITS
KITS VITI CARBURATORI

Ref.	R.O. OEM	ROSCA THREAD PASSO
REC9-35176		1 3/8" - 5/16"

BOYAS
FLOATS
GALLEGGIANTI

ROCHESTER

Ref.	R.O. OEM	CUERPOS BBL CORPI
REC1397-2060	1397-2060	2

ROCHESTER

Ref.	R.O. OEM	CUERPOS BBL CORPI
REC1397-3327	1397-3327 1397-8546 1397-8959	4

ROCHESTER & MERCAB

Ref.	R.O. OEM	CUERPOS BBL CORPI
REC3302-9031	1397-5837 3302-9031	2

WEBER

Ref.	R.O. OEM	CUERPOS BBL CORPI
REC811536T	811536T 811536	4

WEBER

Ref.	R.O. OEM	CUERPOS BBL CORPI
REC1397-2610	1397-2610	

KIT AGUJAS
INLET NEEDLE KIT
KIT AGHI

WEBER

Ref.	R.O. OEM
REC823727	823727

MOTORES / ENGINES / MOTORI
V6

WEBER

Ref.	R.O. OEM
REC811534	811534

MOTORES / ENGINES / MOTORI
V8

MERCAB

Ref.	R.O. OEM
REC3302-804689	3302-804689

MOTORES / ENGINES / MOTORI
Moderno
New style
Modello moderno

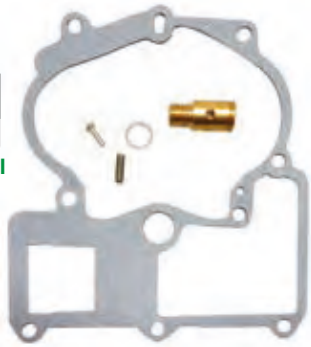

Ref.	R.O. OEM
REC3302-9407	3302-9407

MOTORES / ENGINES / MOTORI
Antiguo
Old style
Modello vecchio

JUNTAS CARBURADOR
CARBURETORS GASKETS
GUARNIZIONE CARBURATORI

Ref.	R.O. OEM
REC27-48399	27-48399

Ref.	R.O. OEM
REC27-805396	27-805396

MOTORES / ENGINES / MOTORI
5.7L & 7.4L MPI

HOLLEY

Ref.	R.O. OEM	CUERPOS BBL CORPI
REC27-65577	27-65577	4
REC27-12732	27-12732	4
REC27-41609	27-41609	4
REC27-70142	27-70142	2
REC27-60715	27-60715	2

REC27-41609

REC27-65577

REC27-12732

REC27-70142

REC27-60715

ROCHESTER

Ref.	R.O. OEM	CUERPOS BBL CORPI
REC27-64692	27-64692	4
REC27-58764	27-58764	2

REC27-58764

REC27-64692

ROCHESTER & WEBER

Ref.	R.O. OEM	CUERPOS BBL CORPI
REC27-524572	27-524572	4
REC27-8079821	8079821	2

REC27-524572

REC27-8079821

KITS CARBURADORES
CARBURETORS KITS
KIT CARBURATORI

Ref.	R.O. OEM
REC823427A1	823427A1 1397-8873 1397-8872 1397-7547 1397-7542 1397-3459 1397-2634 1397-2067

Ref.	R.O. OEM
REC1397-6367A1	1397-6367A1

Ref.	R.O. OEM
REC1397-8760	1397-8760 1397-5830 1397-7099

Ref.	R.O. OEM
REC1398-3089	1398-3089 1346-2770

Ref.	R.O. OEM
REC1397-3458	1397-3458

Ref.	R.O. OEM
REC1396-4656	1396-4656

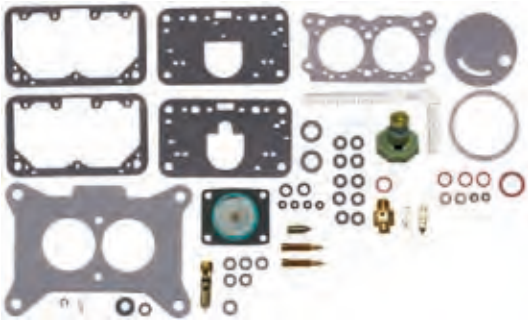

Ref.	R.O. OEM
REC13220	13220

MOTORES / ENGINES / MOTORI

GM420 V8 (87-89)
GM425 V8 454 (90-93)
GM425 Gen- V V8 454 (92-93)
GM440 TRS 454 (83-86)
GM450 V8 454 (95-96)
GM460 TRS V8 482 (83-86)
GM465 V8 502 (90-92)
GM465 Gen-V 502 V8 (92-94)
500 Gen+ GM502 V8 (1999)
500 Gen V 502 V8 (94-98)
500 Buldog 540 V8 (90-01)

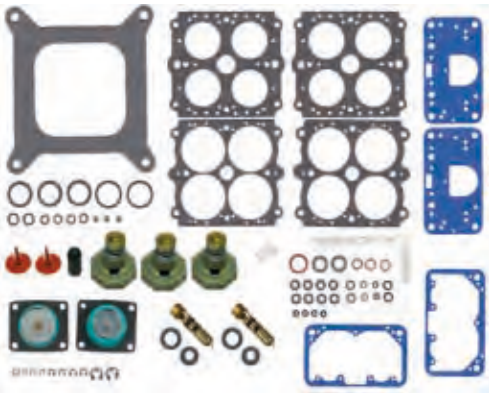

WEBER

Ref.	R.O. OEM	CUERPOS BBL CORPI
REC809064	809064	4
REC809065	809065 835076 823728	4

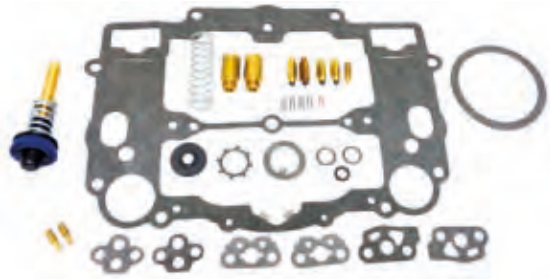

MERCAB

Ref.	R.O. OEM
REC3302-804845	3302-9437 3302-804845

Ref.	R.O. OEM
REC3302-804844002	3302-804844002

FORD

Ref.	R.O. OEM
REC1396-5238	1396-5238 1396-5222

MOTORES / ENGINES / MOTORI

FORD 351, (1970-74)

FORD + ROCHESTER

Ref.	R.O. OEM
REC1397-5831	1397-5831

MOTORES / ENGINES / MOTORI

(1970-77)

ROCHESTER

Ref.	R.O. OEM	CUERPOS BBL CORPI
REC823426A1	823426A1	4

MOTORES / ENGINES / MOTORI

FORD 351, (1970-74)

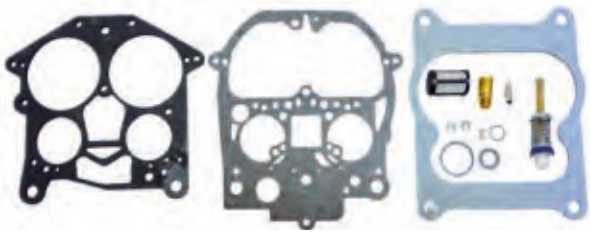

GUIA CARBURADORES
CARBURETORS GUIDE
GUIDA CARBURATORI

MODELO MODEL MODELLO	CUERPOS BBL CORPI	AÑOS YEAR ANNI	SERIE SERIAL SERIE	CARB. COMPLETO CARB. ASSY CARB. COMPLETO	CARB. KIT CARB. KIT CARB. KIT	JUNTA BASE BASE GASKET GUARNIZIONE BASE	KIT AGUJA NEEDLE KIT KIT AGHI	BOYA FLOAT GALLEGGIANTE
ROCHESTER								
90/ L4	2	1970-72	2851424-3226957	REC1347-818619R02	REC823427A1	REC27-64692		REC1397-2060
110/ L4	2	1963-66	1357370-2044033	REC1347-818619R02	REC823427A1	REC27-64692		REC1397-2060
120/ L4	2	1972-82	3377341-6229717	REC1347-818619R02	REC823427A1	REC27-64692		REC1397-2060
120/2.5L L4	2	1983-89	6229718-0C853255	REC1347-818619R02	REC823427A1	REC27-64692		REC1397-2060
120 (GM153) L4	2	1983-86	6229718-0B531853	REC1348-818621R02	REC823427A1	REC27-64692		N/A
140 (GM181) L4	2	1982-86	6229718-0B450800	REC1348-818621R02	REC823427A1	REC27-64692		N/A
140 (GM181) L4	2	1968-78	02816417-09999999	REC982217	REC823427A1	REC27-64692		REC1397-2060
140 (GM181) L4	2	1979-82	5157669-6229717	REC982217	REC823427A1	REC27-64692		REC1397-2060
2.5L (GM153) L4	2	1987-89	0B531854-0C856558	REC1348-818621R02	REC823427A1	REC27-64692		N/A
3.0L (GM181) L4	2	1987-89	0B450801-0C856558	REC1348-818621R02	REC823427A1	REC27-64692		N/A
205 (4.3L/LX)	4	1987	0B527955-0B775129	REC3304-9354A2	REC823426A1	REC27-524572		REC1397-3327
205 (4.3L)	4	1985-87	0A331455-0B527954	REC3304-9354A2	REC823426A1	REC27-524572		REC1397-3327
4.3L /LX	4	1988-92	0B775130-0D714106	REC3304-9354A2	REC823426A1	REC27-524572		REC1397-3327
898/200/5.0L	2	1987-95	0B525982-0F600999	REC3310-807312A1	REC3302-804845	REC27-8079821		REC3302-9031
228 (GM305)	4	1977-84	4765100-0B525981	REC1347-9661A3	REC823426A1	REC27-524572		REC1397-3327
228 MIE (GM305)	4	1977-80	4765100-5907057	REC1347-9661A3	REC823426A1	REC27-524572		REC1397-3327
230 MIE (GM305)	4	1987-95	0B522506-0B788151	REC1347-9661A3	REC823426A1	REC27-524572		REC1397-3327
230 (GM305)	4	1985-87	6218462-0B773799	REC1347-9661A3	REC823426A1	REC27-524572		REC1397-3327
5.0LX (GM305)	4	1988-95	0B773740-0F600999	REC1347-9661A3	REC823426A1	REC27-524572		REC1397-3327
233 (351) FORD	2	1975-77	00000000-09999999	REC1376-818622R02	REC1397-8760	REC27-70142		REC3302-9031
233 MIE (351) FORD	2	1975-76	00000000-09999999	REC1376-818622R02	REC1397-8760	REC27-70142		REC3302-9031
888 (302) FORD	2	1971-77	3108723 +	REC1376-818622R02	REC1397-8760	REC27-70142		REC3302-9031
5.7L (2BBL)	2	1996-97	F601000-K999999	REC3310-807312A1	REC3302-804845	REC27-8079821		REC3302-9031
5.7L SKI(2BBL)	2	1996-97	0F775200-0K999999	REC3310-807312A1	REC3302-804845	REC27-8079821		REC3302-9031
260/5.7MIE	4	1987-93	0B522506-0F024999	REC1347-816373A4	REC823426A1	REC27-524572		REC1397-3327
260	4	1978-86	4908850-0B525981	REC1347-816373A4	REC823426A1	REC27-524572		REC1397-3327
260/5.7L ALPHA	4	1987-93	0B525982-0F000454	REC1347-816373A4	REC823426A1	REC27-524572		REC1397-3327
5.7L BRAVO (w/o High Rise Intake)	4	1987-91	0B525982-0D617327	REC1347-816373A4	REC823426A1	REC27-524572		REC1397-3327
5.7L SKI	4	1985-93	0A338533-0F025099	REC1347-816373A4	REC823426A1	REC27-524572		REC1397-3327
300MR/TRS	4	1985-86	6668677-0B430367	REC1347-816373A4	REC823426A1	REC27-524572		REC1397-3327
330 MCM	4	1977-87	4623115-0B816540	REC804626R02	REC823426A1	REC27-524572		REC1397-3327
330 MIE	4	1977-80	4623115-5889913	REC804626R02	REC823426A1	REC27-524572		REC1397-3327
340/7.4L MIE	4	1981-92	5889914-0D715493	REC804626R02	REC823426A1	REC27-524572		REC1397-3327
7.4L BRAVO I/II	4	1988-91	0B771113-0D603117	REC804626R02	REC823426A1	REC27-524572		REC1397-3327
454 MAG ALPHA	4	1986-88	0A631894-0B785148	REC804626R02	REC823426A1	REC27-524572		REC1397-3327
MERCAB & WEBER								
4.3LH (GEN+)	4	1998	0L010044-0M614999		REC809065	REC27-524572	REC823727	REC811536T
4.3L CARB ALPHA/BRAVO	2		0M615000-0W300012	REC3310-864941A01	REC3302-9031	REC27-8079821	REC3302-804689	REC3302-9031
5.0L CARB ALPHA/BRAVO	2		0M600000 +	REC3310-864942A01	REC3302-804844002	REC27-8079821	REC3302-804689	REC3302-9031
5.0L (2BBL) GM305 V-8	2	1998 +	0L015751-0M599999	REC3310-864942A01	REC3302-804844002	REC27-8079821	REC3302-804689	REC3302-9031
5.7 CARB ALPHA/BRAVO	2		0M600000 +	REC3310-864943A01	REC3302-804844002	REC27-8079821	REC3302-804689	REC3302-9031
5.7L CARB MIE	2		0L002003-0W090899	REC3310-864943A01	REC3302-804844002	REC27-8079821	REC3302-804689	REC3302-9031
5.7L CARB SKY	2		0M317000-0W090899	REC3310-864943A01	REC3302-804844002	REC27-8079821	REC3302-804689	REC3302-9031
5.7L(2BBL)GM350V-8	2	1998-01	0L010037-0M599999	REC3310-864943A01	REC3302-804844002	REC27-8079821	REC3302-804689	REC3302-9031
5.7L COMPETITON SKY(GEN+)	2	1998	0L002005-0M316999	REC3310-864943A01	REC3302-804844002	REC27-8079821	REC3302-804689	REC3302-9031
7.4L MIE	4	1995-97	0F350000-0K999999	REC807262R02	REC809064	REC27-41609	REC811534	REC811536T
7.4L BRAVO I/II	4	1995-97	0F352000-0K999999	REC807262R02	REC809064	REC27-41609	REC811534	REC811536T
7.4L BRAVO III	4	1996-97	0F800700-0K999999	REC807262R02	REC809064	REC27-41609	REC811534	REC811536T
TKS								
5.0L CARB ALPHA/BRAVO	2		0M600000-0W300009	REC3310-866142A04	REC3302-804844002	REC27-8079821	REC3302-804689	REC3302-9031
5.0L CARB ALPHA/BRAVO	2		0W300010 +	REC3310-866142A04	REC3302-804844002	REC27-8079821	REC3302-804689	REC3302-9031
5.7L CARB ALPHA/BRAVO	2		0M600000-0W300009	REC3310-866143A03	REC3302-804844002	REC27-8079821	REC3302-804689	REC3302-9031
5.7L CARB ALPHA/BRAVO	2		0W300010 +	REC3310-866143A03	REC3302-804844002	REC27-8079821	REC3302-804689	REC3302-9031
5.7 CARB MIE	2		0M317000-0W689999	REC3310-866143A03	REC3302-804844002	REC27-8079821	REC3302-804689	REC3302-9031
5.7 CARB MIE	2		0W690000 +	REC3310-866143A03	REC3302-804844002	REC27-8079821	REC3302-804689	REC3302-9031
5.7 CARB SKY	2		0M317000-0W689999	REC3310-866143A03	REC3302-804844002	REC27-8079821	REC3302-804689	REC3302-9031
5.7 CARB SKY	2		0W694844 +	REC3310-866143A03	REC3302-804844002	REC27-8079821	REC3302-804689	REC3302-9031

GUÍA KITS CARBURADOR Y BOYAS
CARBURETOR REPAIR KITS & FLOATS APPLICATION
GUIDA KIT CARBURATORI E GALLEGGIANTI

MODELO MODEL MODELLO	SERIE SERIAL SERIE	R.O. MCM OEM MCM R.O. MCM	CARBURADOR CARBURETOR CARBURETORE	KIT	BOYA FLOAT GALLEGGIANTE	JUNTA BASE GASKET MOUNTING GUARNIZIONE BASE	KIT AGUJAS NEEDLE KIT KIT AGHI
MCM 120/2.5L	2520425-3377340	1336-3594A1	R2/2GC	N.D.	REC1397-2060	REC27-64692	
	337341-3770649	1351-4263A3	R2/2GC	REC823427A1	REC1397-2060	REC27-64692	
	3770650-4469865	1351-5202A1	R2/2GC	REC823427A1	REC1397-2060	REC27-64692	
	4469866-5192048	1351-6065A2	R2/2GC	REC823427A1	REC1397-2060	REC27-64692	
	5192049-6229717	1351-7354A1	R2/2GC	REC823427A1	REC1397-2060	REC27-64692	
	6229718-OC853255	1351-8480A2	R2/2GC	REC823427A1		REC27-64692	
	6229718-OC853255	1389-8490A2	M2/Mercarb	REC3302-804844002	REC3302-9031	REC27-8079821	REC3302-9407
	6229718-OC853255	1389-9350A2	M2/Mercarb	REC3302-804844002	REC3302-9031	REC27-8079821	REC3302-9407
	6229718-OC853255	1389-9562A1	M2/Mercarb	REC3302-804844002	REC3302-9031	REC27-8079821	REC3302-9407
MCM 140/3.0L/3.0LX (4 Cil.)	2816417-2911439	1351-4032A1	R2/2GC	REC823427A1	REC1397-2060	REC27-64692	
	2911440-3771644	1351-4293A1	R2/2GC	REC823427A1	REC1397-2060	REC27-64692	
	3771645-5157668	1351-5203A1	R2/2GC	REC823427A1	REC1397-2060	REC27-64692	
	5157669-6229717	1351-7355A1	R2/2GC	REC823427A1	REC1397-2060	REC27-64692	
	6229718-0C856556	1351-8480A2	R2/2GC	REC823427A1		REC27-64692	
	6229718-0C856556	1389-8490A2	M2/Mercarb	REC3302-804844002	REC3302-9031	REC27-8079821	REC3302-9407
	6229718-0C856556	1389-9350A2	M2/Mercarb	REC3302-804844002	REC3302-9031	REC27-8079821	REC3302-9407
	6229718-0C856556	1389-9562A1	M2/Mercarb	REC3302-804844002	REC3302-9031	REC27-8079821	REC3302-9407
	0C856559-0D447414	1389-815396A2	M2/Mercarb				
	0D447415-0D836075	1389-9562A1	M2/Mercarb	REC3302-804844002	REC3302-9031	REC27-8079821	REC3302-9407
	0D836076-0F603999	1389-815396A2	M2/Mercarb				
	LX 0C856559+	1389-815397A2	M2/Mercarb				
MCM 165/170/3.7L (4 Cil.)	6916779+	1389-9564A1	M2/Mercarb	REC3302-804844002	REC3302-9031	REC27-8079821	REC3302-9407
MCM470	4208730-6916778	1376-5990A1	R2/2GC	REC823427A1	REC3302-9031	REC27-8079821	
	6218037-6916778	1389-8489A5	M2/Mercab	REC3302-804844002	REC3302-9031	REC27-8079821	REC3302-804689
MCM185 (229CID)	6330183-6919655	3300-8886A 2	R4/4ME	REC823426A1	REC1397-2060	REC27-524572	
MCM485	5688394-6218036	1376-5990A1	R2/2GC	REC823427A1	REC3302-9031	REC27-64692	
MCM180/190/3.7LX	6916779+	1347-9142A2	R4/4ME	REC823426A1	REC1397-3327	REC27-524572	
MCM488	6170297-6916778	1347-8460A3	R4/4ME	REC823426A1	REC1397-3327	REC27-524572	
MCM 175/185/4.3L V6	0A221455-0B527954	3304-9353A2	M2/Mercarb	REC3302-804845	REC3302-9031	REC27-8079821	REC3302-9407
	0A221455-0D714106	3304-9565A1	M2/Mercarb	REC3302-804844002	REC3302-9031	REC27-8079821	REC3302-9407
	0F000878+	3310-80776A1	M2/Mercarb	REC3302-804844002	REC3302-9031	REC27-8079821	REC3302-804689
MCM205/ 4.3LX/ 4.3LXH/LHV6	0A331455-0D714369	3304-9354A2	R4/4MV	REC823426A1	REC1397-3327	REC27-524572	
	0D714370-OF802999	3310-807826A1	Weber	REC809064	REC811536T	REC27-524572	REC823727
MCM198MIE/898-V8	4762210-0B525981	1376-8295A3	R2/2GC	REC1397-5831	REC3302-9031	REC27-8079821	
MCM898/200 V8	6218462-0B525981	1389-9563A1	M2/Mercarb	REC3302-804844002	REC3302-9031	REC27-8079821	REC3302-9407
MCM200/5.0L V8	0B525982-0F600999	1389-9670A2	M2/Mercarb	REC3302-804844002	REC3302-9031	REC27-8079821	REC3302-804689
MCM5.0L (GENE+) V8	0L157751+	3310-861448A1	M2/Mercarb		REC3302-9031	REC27-8079821	REC3302-804689
MCM888 V8	3108723-4887829	1356-4642	H2/2300	REC1396-4656	REC3302-9031	REC27-60715	
	3108723-4887829	1376-5659A1	R2/2GC	REC1397-5831		REC27-8079821	
MCM228/TR/MIE V8	4765100-5069430	1347-6427A1	R4/4MV	REC823426A1	REC1397-3327	REC27-524572	
	4765100-5069430	1347-6438A1	R4/4MV	REC823426A1	REC1397-3327	REC27-524572	
MCM228V8	5069431-6021783	1347-7361A1	R4/4MV	REC823426A1	REC1397-3327	REC27-524572	
	6021784-6218461	1347-8296A4	R4/4MV	REC823426A1	REC1397-3327	REC27-524572	
MCM228/230/5.0LX	6218462-0F600999	1347-9661A3	R4/4MV	REC823426A1	REC1397-3327	REC27-524572	
MCM228MIE V8	5069431-6040745	1347-7364A1	R4/4MV	REC823426A1	REC1397-3327	REC27-524572	
MCM230MIE V8	6040746-0B788151	1347-8290A1	R4/4MV	REC823426A1	REC1397-3327	REC27-524572	
MCM233/MIE V8	4173000-4465029	1346-57744A1	R2/2GC	REC1397-5831	REC3302-9031	REC27-8079821	
	4465030-4902304	1346-6152A2	R2/2GC	REC1397-5831	REC3302-9031	REC27-8079821	
MCM250 (350CID) V8	4768000-4908849	1347-3353	R4/4MV	REC823426A1	REC1397-3327	REC27-48399	
	4768000-4908849	1347-3237A3	R4/4MV	REC823426A1	REC1397-3327	REC27-48399	
MCM255/MIE (Ford)	3258728-4175499	1356-5169	H4/4160	REC17-8M0065070		REC17-14872A1	
MCM255/MIE V8	4175500-4924564	1347-5732A1	R4/4MV	REC823426A1	REC1397-3327	REC27-524572	
	4924565-5195908	1347-7062A1	R4/4MV	REC823426A1	REC1397-3327	REC27-524572	
	5195909-5907057	1347-7365A1	R4/4MV	REC823426A1	REC1397-3327	REC27-524572	
MCM260MIE V8	5907058-0B522505	1347-8289A1	R4/4MV	REC823426A1	REC1397-3327	REC27-524572	
MCM260MIE/ 5.7MIE	0B522506-0F024999	1347-9662A4	R4/4MV	REC823426A1	REC1397-3327	REC27-524572	
MCM5.7MIE V8	0F025000-0F349299	3310-806761A1	Weber		REC811536T	REC27-524572	REC811534
	0F025000-0F349299	3310-806761A2	Weber		REC811536T	REC27-524572	REC811534
	0F349300-0F622099	3310-806761A3	Weber		REC811536T	REC27-524572	REC811534
	0F622100-0K999999	3310-806762A2	Weber		REC811536T	REC27-524572	REC811534
MCM5.7MIE (2BBL)	0L002003+	3310-861245A1	Mercarb		REC3302-9031	REC27-8079821	REC3302-804689
255 V8	4175500-4767999	1347-5732A 1	R4/4MV	REC823426A1	REC1397-3327	REC27-524572	
260 V8	4908850-5060805	1347-6492A 1	R4/4MV	REC823426A1	REC1397-3327	REC27-524572	
	5060806-6024393	1347-7362A 1	R4/4MV	REC823426A1	REC1397-3327	REC27-524572	
	6024393-0B525981	1347-8292A 1	R4/4MV	REC823426A1	REC1397-3327	REC27-524572	
260 V8/5.7L Alpha	0B525982-0F000454	1347-9662A 4	R4/4MV	REC823426A1	REC1397-3327	REC27-524572	
5.7L Alpha V8	0F000455-0F273497	3310-806761A 1	Weber			REC27-524572	REC811534
	0F273498-0F600999	3310-806761A 3	Weber			REC27-524572	REC811534
5.7L (2BBL) V8	0F601000-0K999999	3310-807312A 1	Mercarb			REC27-8079821	REC3302-804689
5.7L (Gen+) (2BBL)	0L010037+	3310-861245A1	Mercarb			REC27-8079821	REC3302-804689
5.7LX (4BBL) V8	0F601000-0K999999	3310-807262A 2	Weber			REC27-524572	REC811534

MODELO MODEL MODELLO	SERIE SERIAL SERIE	R.O. MCM OEM MCM R.O. MCM	CARBURADOR CARBURETOR CARBURETORE	KIT	BOYA FLOAT GALLEGGIANTE	JUNTA BASE GASKET MOUNTING GUARNIZIONE BASE	KIT AGUJAS NEEDLE KIT KIT AGHI
5.7L Bravo V8	0B525982-0D617327	1347-9662A 4	R4/4MV	REC823426A1	REC1397-3327	REC27-524572	
	0B525982-0D617327	1347-8289A 1	R4/4MV	REC823426A1	REC1397-3327	REC27-524572	
	0B525982-0D617327	3310-806970A 1	Weber		REC811536T	REC27-524572	REC811534
350 Magnum Alpha	0A635178-0D617327	1347-8289A 1	R4/4MV	REC823426A1	REC1397-3327	REC27-524572	
	0D617328-0F600999	3310-806970A 1	Weber		REC811536T	REC27-524572	REC811534
	0F601000-0K999999	3310-807262A 2	Weber		REC811536T	REC27-524572	REC811534
5.7L Ski V8	0A338533-0F025099	1347-9415T	R4/4MV	REC823426A1	REC1397-3327	REC27-524572	
	0F025100-0F449999	3310-806761A 2	Weber		REC811536T	REC27-524572	REC811534
	0F450000-0F775199	3310-806761A 3	Weber		REC811536T	REC27-524572	REC811534
5.7L Ski (2BBL) V8	0F775200-0K999999	3310-807312A 1	Mercarb		REC3302-9031	REC27-8079821	REC3302-804689
5.7L Ski (Gen+)(2BBL) V8	0L002005+	3310-861245A 1	Mercarb		REC3302-9031	REC27-8079821	REC3302-804689
350 MAG Ski V8	0D505450-0K999999	3310-807262A 2	Weber		REC811536T	REC27-524572	REC811534
	0K040400-0K999999	3310-860371A 1	Weber		REC811536T	REC27-524572	REC811534
270 MCM/MIE V8	2851074-3385720	1347-4180A 1	R4/4MV	REC823426A1	REC1397-3327	REC27-524572	
280 TRS V8	4176250-4176468	1347-4179A 2	R4/4MV	REC823426A1	REC1397-3327	REC27-524572	
	4176469-4770199	1347-5981A 1	R4/4MV	REC823426A1	REC1397-3327	REC27-524572	
300 MR/TRS V8	6668677-0B430367	1347-7498A 7	R4/4MV	REC823426A1	REC1397-3327	REC27-524572	
325 MCM/MIE V8	2278747-3042730	1347-3342	R4/4MV	REC823426A1	REC1397-3327	REC27-524572	
	3042731-3780449	1347-4533A 1	R4/4MV	REC823426A1	REC1397-3327	REC27-524572	
	2278747-3080449	1347-3689A 1	R4/4MV	REC823426A1	REC1397-3327	REC27-524572	
330 MCM V8	4623115-5027230	1347-6493A 1	R4/4MV	REC823426A1	REC1397-3327	REC27-524572	
	5027231-6083144	1347-7363A 1	R4/4MV	REC823426A1	REC1397-3327	REC27-524572	
	6083145-0B816540	1347-8291A 3	R4/4MV	REC823426A1	REC1397-3327	REC27-524572	
330 MIE V8	4623115-5226384	1347-6493A 1	R4/4MV	REC823426A1	REC1397-3327	REC27-524572	
	5226385-5889913	1347-7366A 1	R4/4MV	REC823426A1	REC1397-3327	REC27-524572	
340/7.4L MIE V8	5889914-0D715493	1347-8288A 1	R4/4MV	REC823426A1	REC1397-3327	REC27-524572	
7.4L c/ Hurth V8	0D715494-0F349999	3310-80969A 2	Weber		REC811536T	REC27-524572	REC811534
7.4L c/BORG WARNER V8	0D715494-0F349999	3310-80969A 3	Weber		REC811536T	REC27-524572	REC811534
7.4L MIE V8	0F350000-0K999999	3310-86969A 1	Weber		REC811536T	REC27-524572	REC811534
7.4L BRAVO I/II V8	0B771113-0D603117	1347-8291A 3	R4/4MV	REC823426A1	REC1397-3327	REC27-524572	
	0D603118-0F351999	3310-86969A 2	Weber		REC811536T	REC27-524572	REC811534
	0F352000-0K999999	3310-86969A 1	Weber		REC811536T	REC27-524572	REC811534
7.4L BRAVO III V8	0D838819-0F800699	3310-806755A 2	Weber		REC811536T	REC27-524572	REC811534
	0F800700-0K999999	3310-806969A 1	Weber		REC811536T	REC27-524572	REC811534
370 V8	4179554-0B714586	1347-7498A 2	R4/4MV	REC823426A1	REC1397-3327	REC27-524572	
400 V8	TODOS - All	1347-7498A 2	R4/4MV	REC823426A1	REC1397-3327	REC27-524572	
420/425 V8	0A398941-0D937011	13549A 4	H4	REC13220			
440/460 V8	4179554-0B485220	1393-8862A 1	H4	REC13220			
450 V8	0F347100-0F347277	13549A 4	H4	REC13220			
454 MAG Alpha V8	0A631894-0B785148	1347-8291A 3	R4/4MV	REC823426A1	REC1397-3327	REC27-524572	
	0A631894-0B785148	1347-8291A 3	R4/4MV	REC823426A1	REC1397-3327	REC27-524572	
454 MAG Bravo V8	0B721206-0D808068	1347-7498A 2	R4/4MV	REC823426A1	REC1397-3327	REC27-524572	
	0D808069-0F304999	3310-806755A 1	Weber		REC811536T	REC27-524572	REC811534
	0F305000-0K999999	3310-806755A 2	Weber		REC811536T	REC27-524572	REC811534
465 V8	0C849992-0F213244	N/D	H4	REC13220			
500 (502 CID) V8	0F213293-0F615766	13549A12	H4	REC13220			
	0F615767+	13549T21	H4	REC13220			
500 Bulldog (540 CID) V8	0C577254-0F348987	13549A10	H4	REC13220			
	0F615767+	13549A23	H4	REC13220			
502 MAG V8	0C878221-0D824588	1347-814623A 2	R4/4MV	REC823426A1	REC1397-3327	REC27-524572	
	0D824589-0F114528	3310-806971A 1	Weber		REC811536T	REC27-524572	REC811534
8.2L MIE V8	0C878221-0D857199	1347-814623A 2	R4/4MV	REC823426A1	REC1397-3327	REC27-524572	
	0D878221-0F819619	3310-806971A 1	Weber		REC811536T	REC27-524572	REC811534

CHOKE

Ref.	R.O. OEM	
REC1396-4148	1396-4148	HOLLEY
REC809066	809066	WEBER 4v Carb (electric choke)
REC70125A02	70125A02 70125A1 70125	ROCHESTER & MERCAB

REC1396-4148

REC70125A02

REC809066

DEPRESOR
CHOKE PULL-OFF
DEPRESSORE

Ref.	R.O. OEM
REC1397-8582	1397-8582

MOTORES / ENGINES / MOTORI
Rochester, 4v carb.

TERMOSTATO
THERMOSTAT
TERMOSTATO

Ref.	R.O. OEM
REC71464A01	71464 71464A01 72625

MOTORES / ENGINES / MOTORI
Rochester, (divorced Choke)

APAGALLAMAS
FLAME ARRESTORS
PARAFIAMMA

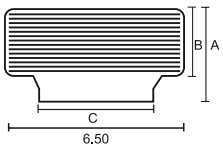

Ref.	R.O. OEM	A	B	C	MOTOR ENGINE MOTORE
REC806637A1	806637A1	7.62	5.71	12.82	
REC861259	861259	6.04	3.94	9.40	
REC805016A1	805016A1	6.20	4.00	7.80	4 & 6 Cyl.
REC85785A2	85785A2	5.71	3.73	12.83	V8
REC85784A1	85784A1	5.48	2.76	7.93	4 & 6 Cyl.
REC805298A1	85785T 85785-2 805298A1	5.71	3.73	12.83	V8

REC806637A1

REC805016A1

REC861259

REC85784A1

REC805298A1

REC85785A2

INYECTORES
INJECTORS
INIETTORI

Ref.	R.O. OEM
REC802632T	802632T 802632

MOTORES / ENGINES / MOTORI
MCM/MIE 7.4L
MPI (L29)

Ref.	R.O. OEM
REC881693002	881693002

MOTORES / ENGINES / MOTORI
MCM 496 Mag &
HO, MIE 8.1S & HO

Ref.	R.O. OEM
REC885176	885176

MOTORES / ENGINES / MOTORI
MCM/MIE 4.3L MPI,
5.0L MPI, 350 Mag MPI,
MX 6.2L MPI engines
w/ECM555

Ref.	R.O. OEM
REC8M0051200	8M0051200

MOTORES / ENGINES / MOTORI
MCM 500 EFI

Ref.	R.O. OEM
REC3858941	852956A1

MOTORES / ENGINES / MOTORI
MCM GM V6 & V8 (305 & 350 cid) TBI

KIT RETENES INYECTOR
FUEL INJECTOR SEAL KIT
KIT PARAOLI INIETTORI

Ref.	R.O. OEM
REC9-33306	881693 881693002

MOTORES / ENGINES / MOTORI
881693 on MCM 496 Mag
& HO, MIE 8.1S & HO

Ref.	R.O. OEM
REC9-33304	802632T 849896

MOTORES / ENGINES / MOTORI
802632T & 849896
MCM/MIE 7.4L
MPI (L29)

Ref.	R.O. OEM
REC9-33301	885176

MOTORES / ENGINES / MOTORI
885176 MCM/MIE
4.3L, 5.OL, 350 Mag MPI,
MX 6.2L w/ECM 555

Ref.	R.O. OEM
REC9-33300	806807A1

MOTORES / ENGINES / MOTORI
806807A1
Ski 350 Mag MPI & Blk Scorpion Ski
(OF350583-OK040000)

Ref.	R.O. OEM
REC853998A1	853998A1 851956A1 853998T 853998

MOTORES / ENGINES / MOTORI
852956A1
MCM GM
V-6 & V-8 (305 & 350) TBI

Ref.	R.O. OEM
REC9-33302	861260T 861260

MOTORES / ENGINES / MOTORI
861260T 350 Mag MPI (1998+)
MX 6.2L MPI,
7.4L/502 Mag MPI (1999+) 8.2L MPI

Ref.	R.O. OEM
REC9-33303	805225A1

MOTORES / ENGINES / MOTORI
805225A1 MCM/MIE Ski
GM V-8 350, 377, 454, 502 MPI

SENSORES
SENDERS
SENSORI

SENSOR MAP
MAP SENSOR
SENSORE MAP

Ref.	R.O. OEM
REC8M0054726	881731 8M0054726

MOTORES / ENGINES / MOTORI
V6 & V8 MPI con / with / con 555 ECM

Ref.	R.O. OEM
REC854445	854445

MOTORES / ENGINES / MOTORI
MCM 525 EFI

Ref.	R.O. OEM
REC3850396	864856A1 805217A1

MOTORES / ENGINES / MOTORI
MCM/MIE GM V-6 & 350, 377, MX 6.2L
MPI, 7,4L MPI, 454, 502 EFI

Ref.	R.O. OEM
REC861249A1	861249A1 861249

MOTORES / ENGINES / MOTORI
MCM/MIE GM V-6 & 305, 350, MX 6.2L
MPI, 7,4L MPI (1998+)
5.0L, 5.7L EFI (1998)

Ref.	R.O. OEM
REC879150150	879150150 849934

MOTORES / ENGINES / MOTORI
MCM 575SCI

SENSOR MAT / MAP
MAT / MAP SENSOR
SENSORE MAT / MAP

Ref.	R.O. OEM
REC8M0087834	885165 8M0087834

NEW

MOTORES / ENGINES / MOTORI
350MAG MPI
377MAG MPI
383MAG STROKER
4.3L MPI
5.0L MPI
5.7L MPI
6.2L MPI

SENSOR "PICK UP"
PICK UP SENSOR
SENSORE "PICK UP"

Ref.	R.O. OEM
REC3854001	811639 811639T

NEW

MOTORES / ENGINES / MOTORI
V4 / V6 / V8
Delco Voyager

SENSOR DE TEMPERATURA AIRE
AIR TEMPERATURE SENSOR
SENSORE TEMPERATURA ARIA

Ref.	R.O. OEM
REC805223T	805223T 805223

MOTORES / ENGINES / MOTORI
V6 & V8 (350, 454, 496 & 502 CID)
EFI / MPI
500, 520, 525, 540,
575 (Race sterndrive)

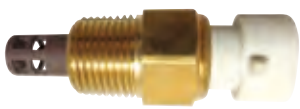

SENSOR DE PICADO
KNOCK SENSOR
SENSORE DI CADUTA

Ref.	R.O. OEM
REC8M0077616	805544T 8M0077616

MOTORES / ENGINES / MOTORI
454, 502, 540, 572
7.4L, 454 MAGNUM 8.2L
500, 525, 575, 600, 800 (Race sterndrive)

Ref.	R.O. OEM
REC806612T	806612T

MOTORES / ENGINES / MOTORI
MCM/MIE 305, 350, 377 GM V8 CID

SENSOR POSICION DE GAS
THROTTLE POSITION SENSOR
SENSORE POSIZIONE FARFALLA

Ref.	R.O. OEM
REC853678T	853678T 853678

MOTORES / ENGINES / MOTORI
MCM/MIE 4.3L,
5.0L, MX 6,2L w/ECM555,
350 Mag MPI, Blk Scorpion
Ski, 7,4L MPI (L29), MCM
496 Mag & HO, 8.1S & HO

Ref.	R.O. OEM
REC803148	803148

MOTORES / ENGINES / MOTORI
MCM/MIE 350 Mag, Blk
Scorpion Ski
(0L005900 & +)

Ref.	R.O. OEM
REC805226A1	805226A1

MOTORES / ENGINES / MOTORI
MCM/MIE V-6 & 305,
350, 454, 502 EFI

SENSOR POSICION ARBOL DE LEVAS
CAMSHAFT SENSOR
SENSORE POSIZIONE ASSE A CAMME

Ref.	R.O. OEM
REC3863130	898141

MOTORES / ENGINES / MOTORI
3.0, 4.3, 5.0, 5.7, 6.2L
Se instala en distribuidor
Is installed in distributor
Viene installato nello spinterogeno

SENSOR CAUDAL AGUA
WATER SENSOR
SENSORE ACQUA

Ref.	R.O. OEM
REC8M6000623	8M6000623 881879010 8818793

MOTORES / ENGINES / MOTORI
V6 & V8
4.5L MPI

SENSOR POSICION CIGÜEÑAL
CRANKSHAFT POSITION SENSOR
SENSORE POSIZIONE ALBERO MOTORE

Ref.	R.O. OEM
REC892617	892617

MOTORES / ENGINES / MOTORI
8.1L
496 Mag, H.O. BRAVO

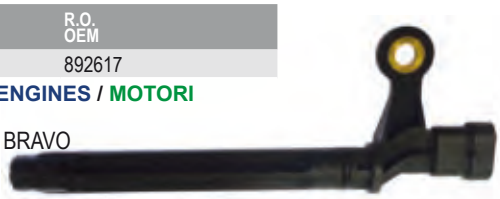

Ref.	R.O. OEM
REC892615002	892615002 892615001 892615

MOTORES / ENGINES / MOTORI
MCM 496 Mag, 8.1 Inboard

Ref.	R.O. OEM
REC864297T01	864297T01 864297 864297001

MOTORES / ENGINES / MOTORI
350 Magnum, 377 Magnum MPI,
5.0L MPI, 5.7L MPI, 6.2L MPI,
8.2L MPI
4.3L CARB / MPI
525, 600, 662, 700 (Race sterndrive)

SENSOR TEMPERATURA ENFRIADOR
COOLANT TEMPERATURE SENDER
SENSORE TEMPERATURA SCAMBIATORE

Ref.	R.O. OEM
REC3850397	805218T 805218

MOTORES / ENGINES / MOTORI
350 MAG ,PI
383 MAG
4.3L MPI, 5.0L MPI, 3.0L MPI
6.2L MPI
357, 377
4.3 CARB, EFI
454, 496 MAG, EFI
5.7L CARB, EFI
8.1, 8.2L MIE

SENSOR TEMPERATURA AGUA
WATER TEMPERATURE SENDER
SENSORE TEMPERATURA ACQUA

Ref.	R.O. OEM	
REC97258A1	97258A1 97258 34625 FI6900198 FI6900152	1/2" - 14 NPT

Ref.	R.O. OEM	
REC806490T	806490T 97257A1 97-257 806490 811091 36525	3/8" - 18 NPT

Ref.	R.O. OEM
REC48952	48952

KIT TEMPERATURA Y PRESIÓN DE ACEITE CON ALARMA
COMPLETE TEMPERATURE & OIL PRESSURE WARNING KIT
KIT TEMPERATURA PRESSIONE DELL'OLIO CON ALLARME

Ref.	R.O. OEM
REC41400	

SENSOR ACEITE PARA BOMBA COMBUSTIBLE
ELECTRIC FUEL PUMP SWITCH SENSOR
SENSORE OLIO PER POMPA COMBUSTIBILE

Ref.	R.O. OEM
REC87-864252	87-864252

MOTORES / ENGINES / MOTORI
4.3, 5.0, 5.7
Motores modernos
Later engines
Motori moderno

Ref.	R.O. OEM
REC87-864252A01	87-864252A01

MOTORES / ENGINES / MOTORI
4.3, 5.0, 5.7
Motores antiguos
Old engines
Motori vecchio

SENSOR IAC
IAC SENDER
SENSORE IAC

Ref.	R.O. OEM
REC3855194	805224A1

MOTORES / ENGINES / MOTORI
MCM/MIE GM V-6 & 305,
350, 454, 502 EFI
500, 575 (Race sterndrive)

Ref.	R.O. OEM
REC803149	803149

MOTORES / ENGINES / MOTORI
MCM/MIE 350 Mag MPI
Black Scorpion Ski, 377 Scorpion,
MCM & Ski MX
6.2L MPI, 7.4L MPI
(L29), 575SCi

VALVULA DE AIRE, IAC
AIR VALVE, IDLE
VALVOLA ARIA

Ref.	R.O. OEM
REC862998	862998

MOTORES / ENGINES / MOTORI
3.0LMPI, 4.3 MPI, 5.0L MPI,
350 MAG MPI,
MX6.2 MPI,
8.1L
600, 662, 700 (Race sterndrive)

SENSOR PRESIÓN DE ACEITE
OIL PRESSURE SENDER
SENSORE PRESIONE OLIO

Ref.	R.O. OEM	HILO THREAD FILO	TERMINAL
REC8M0068784	87-815425T 8M0068784 90806 815425 34623	1/8 - 27	10 - 31

Ref.	R.O. OEM
REC87-805605A1	87-805605A1

MOTORES / ENGINES / MOTORI
3.0L (1990-95)
4.3L (1993-98)
5.0L (1988-01)
5.7L (1988-01)
7.4L (1991-00)

REGULADORES PRESIÓN DE COMBUSTIBLE
FUEL PRESSURE REGULATORS
REGOLATORI PRESSIONE CARBURANTE

Ref.	R.O. OEM
REC802630T01	802630T01 802630001 802630T 802630 8M0069803

MOTORES / ENGINES / MOTORI
MCM/MIE 7.4L MPI (L29) 496 Mag, 8.1L
Se monta en la linea de enfriador de combustible.
Mounts on fuel rail
Si monta nello scambiatore di calore.

Ref.	R.O. OEM
REC849899	849899

MOTORES / ENGINES / MOTORI
MCM 500 EFI (Race sterndrive)
Se instala en el "fuel rail"
Mounts on fuel rail
E 'installato nel "fuel rail"

Ref.	R.O. OEM
REC807952A1	807952A1

MOTORES / ENGINES / MOTORI
MCM/MIE GM V-6, V-8 305, 350, 377 EFI/MPI, MCM 575SCi
Se monta en la linea de enfriador de combustible. (marca rosa)
Mounts on fuel rail (pink mark)
Si monta nella linea dello scambiatore di calore della benzina. (colore rosa)

Ref.	R.O. OEM
REC892681	892681

MOTORES / ENGINES / MOTORI
5.0L MPI, 5.7L MPI, 350 Magnum, 6.2L MPI, 496 Magnum, 8.1L, 8.2L, 502 Mag MPI, 375HP, 425HP. 520, 540 (Race sterndrive)
Se instala en la tapa del módulo.
Is istalled in module cover.
Viene installato nel coperchio del modulo

Ref.	R.O. OEM
REC861126A1	861126A1

MOTORES / ENGINES / MOTORI
MCM 4.3 MPI, 5.0 MPI, 350 Magnum, 8.1 L, 6.2 MPI, 7.4 MPI.
Seguir la marca de la base del tubo, marron azul/verde. Se instala en el enfriador de combustible.
Mounts on fuel cooler. Brown & blue/green mark on base of tube
Da montare su motori con tubo con colore marrone blu/verde. Si monta nella linea dello scambiatore di calore di benzina

Ref.	R.O. OEM
REC885174	885174

MOTORES / ENGINES / MOTORI
4.3L, 5.0L, 5.7L & 6.2L MPI
Con 555 ECM en linea combustible. Se instala en el "fuel rail"
With 555 ECM in fuel rail. Mounts on fuel rail
Con 555 ECM in lineadel carburante
E 'installato nel "fuel rail"

Ref.	R.O. OEM
REC860349A1	860349A1

MOTORES / ENGINES / MOTORI
MCM/MIE 7.4L/LX MPI, 454 Mag MPI, 502 Mag MPI, MIE 8.2L MPI
Se monta en el enfriador de combustible (sin marca de color)
Mounts on fuel cooler (no color mark)
Si monta nella linea dello scambiatore di calore della benzina. (senza codice colore)

Ref.	R.O. OEM
REC805227A1	805227A1

MOTORES / ENGINES / MOTORI
MCM/MIE 7.4L/LX MPI, 454 & 502 Mag MPI, 8.2L MPI
Se instala en el "fuel rail"
Mounts on fuel rail
E 'installato nel "fuel rail"

GUÍA DE SENSORES
SENSOR APPLICATION
GUIDA SENSORI GUIDA SENSORI

MODELO MODEL MODELLO	CID / CYL	YEAR AÑO ANNO	SERIE SERIAL SERIE	INYECTOR INJECTOR INNIETORE	KIT INYECTOR INJECTOR KIT KIT INNIETORE	IAC VÁLVULA IAC VALVE IAC VALVOLA	TPS	REGULADOR PRESIÓN RAIL REGULATOR PRESSURE RAIL REGOLATORE PRESSIONE RAIL	REGULADOR PRESIÓN COOLER REGULATOR PRESSURE COOLER REGOLATORE PRESSIONE COOLER	MAP	PICADO KNOCK BATTITO	TEMP. AIRE AIR TEMP. IAT MAT TEMP. ARIA
262 MAG EFI	262/V6	96-97	OF803800-OK999999		REC3858941	REC3855194	REC805226A1		REC807952A1	REC3850396		
4.3L EFI	262/V6	98-01	OL012009-OM299999		REC3858941	REC3855194	REC805226A1		REC807952A1	REC861249A1		REC805223T
4.3L MPI	262/V6	02/07	OM300000+	REC885176	REC9-33301	REC862998	REC853678T	REC885174	REC807952A1			REC3850397
5.0L EFI	305/V8	98-01	OL012052-OM299999		REC853998A1	REC3855194	REC805226A1		REC807952A1	REC861249A1		REC805223T
5.0L MPI	305/V8	02-07	OM300000+	REC885176	REC9-33301	REC862998	REC853678T	REC885174	REC861126A1			
5.0L MPI DTS	305/V8	05-07	OW310000+	REC885176	REC9-33301			REC885174				
320 EFI	350/V8	87-89	OA543604-OC622418			REC862998						
350 Mag Alpha EFI(gen+)	350/V8	96-97	OF800300-OK999999		REC853998A1	REC3855194	REC805226A1		REC807952A1	REC3850396	REC806612T	
350 Mag Bravo MPI	350/V8	95-96	OF415189-OK001500			REC3855194	REC805226A1	REC806808A2		REC3850396	REC806612T	
350 Mag Bravo MPI (gen+)	350/V8	97	OK001501-OK999999		REC9-33303	REC3855194	REC805226A1		REC807952A1	REC3850396	REC806612T	
350 Mag EFI Ski	350/V8	94-96	OF215561-OF820706		REC853998A1	REC3855194	REC805226A1			REC3850396	REC806612T	
350 Mag EFI Ski	350/V8	1996	OF820707-OK040005		REC853998A1	REC3855194	REC805226A1		REC807952A1	REC3850396	REC806612T	
350 Mag EFI Ski	350/V8	1997	OK040006-OK999999		REC853998A1	REC3855194	REC805226A1		REC807952A1	REC3850396	REC806612T	
350 Mag MPI	350/V8	1998	OL010019-OL331598		REC9-33302	REC803149	REC853678T		REC807952A1	REC861249A1	REC806612T	
350 Mag MPI	350/V8	1998	OL336000-OL346999		REC9-33302	REC803149	REC853678T		REC807952A1	REC861249A1	REC806612T	
350 Mag MPI	350/V8	1999	OL331599-OL-335999		REC9-33302	REC803149	REC803148		REC807952A1	REC861249A1	REC806612T	REC805223T
350 Mag MPI	350/V8	99-01	OL340000-OM299999		REC9-33302	REC803149	REC803148		REC807952A1	REC861249A1	REC806612T	REC805223T
350 Mag MPI	350/V8	02-07	OM300000+	REC885176	REC9-33301	REC862998	REC853678T	REC885174	REC861126A1			
350 Mag MPI DTS	350/V8	05-07	OW310000+	REC885176	REC9-33301			REC885174				
350 Mag MPI Horizon	350/V8	02-07	OM300000+	REC885176	REC9-33301	REC862998	REC853678T	REC885174	REC861126A1			
350 Mag MPI Horizon DTS	350/V8	05-07	OW310000+	REC885176	REC9-33301			REC885174				
350 Mag MPI Horizon MIE	350/V8	99-01	OL304700-OM299999		REC9-33302	REC803149	REC803148		REC807952A1	REC861249A1	REC806612T	
350 Mag MPI Horizon MIE	350/V8	02-04	OM300000-OM398371	REC885176	REC9-33301	REC862998	REC853678T		REC861126A1			

MODELO MODEL MODELLO	CID / CYL	YEAR AÑO ANNO	SERIE SERIAL SERIE	INYECTOR INJECTOR INNIETORE	KIT INYECTOR INJECTOR KIT KIT INNIETORE	IAC VÁLVULA IAC VALVE IAC VALVOLA	TPS	REGULADOR PRESIÓN RAIL REGULATOR PRESSURE RAIL REGOLATORE PRESSIONE RAIL	REGULADOR PRESIÓN COOLER REGULATOR PRESSURE COOLER REGOLATORE PRESSIONE COOLER	MAP	PICADO KNOCK BATTITO	TEMP. AIRE AIR TEMP. IAT MAT TEMP. ARIA
350 Mag MPI Horizon MIE	350/V8	04-07	OM398372+	REC885176	REC9-33301	REC862998	REC853678T	REC885174				
350 Mag MPI Horizon MIE DTS	350/V8	05-07	OW310000+	REC885176	REC9-33301			REC885174				
350 Mag MPI MIE	350/V8	1998	OL002008-OL304999		REC9-33302	REC803149	REC853678T		REC807952A1	REC861249A1	REC806612T	
350 Mag MPI MIE	350/V8	02-04	OM300000-OM398371	REC885176	REC9-33301	REC862998	REC853678T	REC885174	REC861126A1			
350 Mag MPI MIE	350/V8	04-07	OM398372+	REC885176	REC9-33301	REC862998	REC853678T	REC885174				
350 Mag MPI MIE DTS	350/V8	05-07	OW310000+	REC885176	REC9-33301			REC885174				
350 Mag EFI Ski	350/V8	94-96	OF215561-OF820706		REC853998A1	REC3855194	REC805226A1			REC3850396	REC806612T	
350 Mag MPI Ski	350/V8	1998	OL002600-OL304599		REC9-33302	REC803149	REC853678T		REC807952A1	REC861249A1	REC806612T	
350 Mag MPI Ski	350/V8	99-01	OL304600-OM299999		REC9-33302	REC803149	REC803148		REC807952A1	REC861249A1	REC806612T	
350 Mag MPI Ski	350/V8	02-07	OM300000+	REC885176	REC9-33301	REC862998	REC853678T	REC885174	REC861126A1			
5.7L EFI	350/V8	95-97	OF225560-OK999999		REC853998A1	REC3855194	REC805226A1		REC807952A1	REC3850396	REC806612T	
5.7L EFI (Gen+)	350/V8	98-01	OL010035-OM299999		REC853998A1	REC3855194	REC805226A1		REC807952A1	REC861249A1	REC806612T	REC805223T
5.7L EFI (Gen+)	350/V8	1997	OK040300-OK999999		REC853998A1	REC3855194	REC805226A1		REC807952A1	REC3850396	REC806612T	
5.7LX Bravo EFI (Gen+)	350/V8	96-97	OF800300-OK999999		REC853998A1	REC3855194	REC805226A1		REC807952A1	REC3850396	REC806612T	
5.7LX EFI	350/V8	95-97	OF225560-OK999999		REC853998A1	REC3855194	REC805226A1		REC807952A1	REC3850396	REC806612T	
Black Scorpion Ski	350/V8	1996	OF350583-OK040000			REC803149	REC853678T	REC885174		REC3850396	REC806612T	
Black Scorpion Ski	350/V8	1997	OK040001-OL002699		REC9-33303	REC803149	REC853678T		REC807952A1	REC3850396	REC806612T	
Black Scorpion Ski	350/V8	1998	OL002700-OL005600		REC9-33303	REC803149	REC853678T		REC807952A1		REC806612T	
Black Scorpion Ski	350/V8	98-05	OL005601-OM391599		REC9-33303	REC803149	REC803148		REC807952A1		REC806612T	
Black Scorpion Ski	350/V8	03-07	OM391600+		REC9-33303	REC862998	REC803148		REC807952A1			
377 Scorpion MCM	377/V8	99-05	OL416146-OM907201		REC9-33303	REC803149	REC803148		REC807952A1	REC3850396	REC806612T	
377 Scorpion Ski	377/V8	97-98	OK000656-OL600314		REC9-33303	REC803149	REC853678T		REC807952A1	REC3850396	REC806612T	
MX 6.2L MPI	377/V8	00-01	OL68003-OM299999		REC9-33302	REC803149	REC803148		REC807952A1	REC861249A1	REC806612T	REC805223T
MX 6.2L MPI	377/V8	02-04	OM300000-OW059999	REC885176	REC9-33301	REC862998	REC853678T	REC885174	REC861126A1			
MX 6.2L MPI	377/V8	04-07	OW060000+	REC885176	REC9-33301	REC862998	REC853678T	REC885174				
MX 6.2 MPI DTS	377/V8	05-07	OW310000+	REC885176	REC9-33301			REC885174				
MX 6.2L MPI Horizon	377/V8	02-04	OM300000-OW059999	REC885176	REC9-33301	REC862998	REC853678T	REC885174	REC861126A1			
MX 6.2L MPI Horizon	377/V8	04-07	OW060000+	REC885176	REC9-33301	REC862998	REC853678T	REC885174				
MX 6.2L MPI Horizon DTS	377/V8	05-07	OW310000+	REC885176	REC9-33301	REC862998		REC885174				
MX 6.2L MPI Horizon MIE	377/V8	02-04	OM300000-OM398394	REC885176	REC9-33301	REC862998	REC853678T	REC885174	REC861126A1			
MX 6.2L MPI Horizon MIE	377/V8	04-07	OM398395+	REC885176	REC9-33301	REC862998	REC853678T	REC885174				
MX 6.2L MPI Horizon MIE DTS	377/V8	05-07	OW390000+	REC885176	REC9-33301			REC885174				
MX 6.2L MPI MIE	377/V8	02-04	OM300000-OM398394	REC885176	REC9-33301	REC862998	REC853678T	REC885174	REC861126A1			
MX 6.2L MPI MIE	377/V8	04-07	OM398395+	REC885176	REC9-33301	REC862998	REC853678T	REC885174				
MX 6.2L MPI MIE DTS	377/V8	05-07	OW390000+	REC885176	REC9-33301	REC862998		REC885174				
MX 6.2L MPI Ski	377/V8	02-07	OM317000+	REC885176	REC9-33301	REC862998	REC853678T	REC885174	REC861126A1			
MX 6.2L Black Scorpion Ski	377/V8	01-03	OL005601-OM391599		REC9-33303	REC803149	REC803148		REC807952A1		REC806612T	
MX 6.2L Black Scorpion Ski	377/V8	03-07	OK391750+		REC9-33303	REC862998	REC803148		REC807952A1			
454 Mag EFI	454/V8	94-96	OF115700-OF802349		REC9-33303	REC3855194	REC805226A1	REC805227A1		REC3850396	REC8M0077616	REC805223T
454 Mag EFI Ski	454/V8	94-96	OF215800-OF820099		REC9-33303	REC3855194	REC805226A1	REC805227A1		REC3850396	REC8M0077616	REC805223T
454 Mag EFI Ski	454/V8	96-97	OF820099-OK999999		REC9-33303	REC3855194	REC805226A1	REC805227A1		REC3850396	REC8M0077616	
454 Mag MPI	454/V8	96-97	OF802350-OK147349		REC9-33303	REC3855194	REC805226A1	REC805227A1		REC3850396	REC8M0077616	REC805223T
454 Mag MPI	454/V8	96-97	OK147350-OL085399		REC9-33303	REC3855194	REC805226A1	REC805227A1	REC860349A1	REC3850396	REC8M0077616	
454 Mag MPI	454/V8	97-98	OL085400-OM024999		REC9-33302	REC3855194	REC805226A1		REC861126A1	REC3850396	REC8M0077616	
454 Mag MPI Horizon MIE	454/V8	99-01	OL002200-OL086049		REC9-33303	REC3855194	REC805226A1	REC805227A1	REC860349A1	REC3850396	REC8M0077616	
454 Mag MPI Horizon MIE	454/V8	1998	OL086050-OL674000		REC9-33302	REC3855194	REC805226A1		REC861126A1	REC3850396	REC8M0077616	
74.L MPI (L29)	454/V8	99-01	OL010003-OM024330	REC802632T	REC9-33304	REC803149	REC853678T	REC802630T01	REC861126A1	REC861249A1	REC8M0077616	REC805223T
7.4L MPI MIE	454/V8	98-01	OF503052-OK147349		REC9-33303	REC3855194	REC805226A1	REC805227A1		REC3850396	REC8M0077616	REC805223T
7.4L MPI MIE	454/V8	95-96	OK147350-OK999999		REC9-33303	REC3855194	REC805226A1	REC805227A1	REC860349A1	REC3850396	REC8M0077616	
7.4L MPI MIE (L29)	454/V8	1997	OL010003-OL674613	REC802632T	REC9-33304	REC803149	REC805226A1	REC802630T01	REC861126A1	REC861249A1	REC8M0077616	REC805223T

MODELO MODEL MODELLO	CID / CYL	YEAR AÑO ANNO	SERIE SERIAL SERIE	INYECTOR INJECTOR INNIETORE	KIT INYECTOR INJECTOR KIT KIT INNIETORE	IAC VÁLVULA IAC VALVE IAC VALVOLA	TPS	REGULADOR PRESIÓN RAIL REGULATOR PRESSURE RAIL REGOLATORE PRESSIONE RAIL	REGULADOR PRESIÓN COOLER REGULATOR PRESSURE COOLER REGOLATORE PRESSIONE COOLER	MAP	PICADO KNOCK BATTITO	TEMP. AIRE AIR TEMP. IAT MAT TEMP. ARIA
7.4LX TBI	454/V8	98-01	OF820000-OK999999			REC3855194	REC805226A1		REC807952A1	REC3850396	REC8M0077616	
7:4LX MPI	454/V8	96-97	OF602010-OK147349		REC9-33303	REC3855194	REC805226A1	REC805227A1		REC3850396	REC8M0077616	REC805223T
7.4Lx MPI	454/V8	1996	OK147350-OK999999		REC9-33303	REC3855194	REC805226A1	REC805227A1	REC860349A1	REC3850396	REC8M0077616	REC805223T
496 Mag	496/V8	1997	OM025000-OW059999	REC881693002	REC9-33306	REC862998	REC853678T	REC802630T01	REC861126A1			
496 Mag	496/V8	01-04	OW060000+	REC881693002	REC9-33306	REC862998	REC853678T	N.S.S.	REC892681	REC8M0054726		
496 Mag DTS	496/V8	04-07	OM025000-OW059999	REC881693002	REC9-33306			REC802630T01	REC861126A1			
496 Mag DTS	496/V8	01-04	OW060000+	REC881693002	REC9-33306			N.S.S.		REC8M0054726		
496 Mag HO	496/V8	04-07	OM025000-OW059999	REC881693002	REC9-33306	REC862998	REC853678T	REC802630T01	REC861126A1			REC805223T
496 Mag HO	496/V8	01-04	OW060000+	REC881693002	REC9-33306	REC862998	REC853678T	N.S.S.		REC8M0054726		REC805223T
496 Mag HO DTS	496/V8	04-07	OM025000-OW059999	REC881693002	REC9-33306			REC802630T01	REC861126A1			REC805223T
496 Mag HO DTS	496/V8	01-04	OW060000+	REC881693002	REC9-33306			N.S.S.		REC8M0054726		REC805223T
8.1L MIE	496/V8	04-07	OM026000-OW059999	REC881693002	REC9-33306	REC862998	REC853678T	REC802630T01	REC861126A1			REC805223T
8.1L MIE	496/V8	01-04	OW090000+	REC881693002	REC9-33306	REC862998	REC853678T	N.S.S.	REC892681	REC8M0054726		REC805223T
8.1L HO MIE	496/V8	04-07	OM026000-OW089999	REC881693002	REC9-33306	REC862998	REC853678T	REC802630T01	REC861126A1			REC805223T
8.1L HO MIE	496/V8	01-04	OW090000+	REC881693002	REC9-33306	REC862998	REC853678T	N.S.S.	REC892681	REC8M0054726		REC805223T
500 EFI	502/V8	04-07	OL001477+	REC8M0051200	REC9-33304	REC3855194		REC849899	REC861126A1	REC3850396	REC8M0077616	
502 Mag MPI	502/V8	99-05	OD840650-OK147349		REC9-33303	REC3855194	REC805226A1	REC805227A1		REC3850396	REC8M0077616	
502 Mag MPI	502/V8	93-96	OK147350-OL085432		REC9-33303	REC3855194	REC805226A1	REC805227A1	REC860349A1	REC3850396	REC8M0077616	REC805223T
502 Mag MPI	502/V8	97-98	OL085432-OM024999		REC9-33302	REC3855194	REC805226A1		REC861126A1	REC3850396	REC8M0077616	REC805223T
525 EFI	502/V8	99-01	OM900146+		REC9-33303		REC805226A1		REC861126A1	REC854445		
575 Sci	502/V8	03-07	OL306696-OM950526			REC3855194	REC805226A1		REC807952A1	REC879150150	REC8M0077616	REC805223T
8.2 MPI MIE	502/V8	00-05	OF819620-OK147349		REC9-33303	REC3855194	REC805226A1	REC805227A1		REC3850396	REC8M0077616	
8.2 MPI MIE	502/V8	1996	OK127350-OL086012		REC9-33303	REC3855194	REC805226A1	REC805227A1	REC860349A1	REC3850396	REC8M0077616	
8.2 MPI MIE	502/V8	97-98	OL086013-OL674200		REC9-33303	REC3855194	REC805226A1		REC861126A1	REC3850396	REC8M0077616	

BOMBAS COMBUSTIBLE ELÉCTRICAS
ELECTRIC FUEL PUMPS & KIT
POMPE BENZINA ELETTRICHE

Ref.	R.O. OEM
REC861155A6	861155A6 861155A5 805656A6 805656A2 805656A5 805025A2

MOTORES / ENGINES / MOTORI
4.3L V-6.
Sustituye modelos antiguos.
Replaces old models.
Sostituzione vecchi modelli.

Ref.	R.O. OEM
REC861155A3	861155A3 861155A2

MOTORES / ENGINES / MOTORI
4.3, 5.0 / 5.7, 8.1L V6 & V8

Ref.	R.O. OEM
REC866170A01	866170A01

MOTORES / ENGINES / MOTORI
305, 350, 377 & 496 CID
GM V-8 con módulo de baja presión Gen III.
GM V-8 with Gen III cool fuel module low pressure.
Con modulo di bassa pressione Gen III.

Ref.	R.O. OEM
REC866169T01	866169T01 866169A01

MOTORES / ENGINES / MOTORI
305, 350, 377, 496
5.0, 5.7, 6.2, 8.1, 8.2, 6.2L
Con regulador. GM V-8 con módulo de alta presión Gen III.
With regulator for GM V-8 with Gen III cool fuel module high pressure.
Con regolatore. Con modulo ad alta pressione Gen III.

KIT BOMBA COMBUSTIBLE
FUEL PUMP KIT
KIT POMPA BENZINA

NEW

Ref.	R.O. OEM
REC827682T	827682T 827682

MOTORES / ENGINES / MOTORI

262 MAG (TBI) (GEN+)	OF803800 - OK999999
350 MAG EFI SKY (TBI) GM350 V-8 1994-1996	OF215561 - OF820706
350MAG MPI SKY GM350 V-8 1995-1996	OF350583 - OF799999
350 MAG ALPHA EFI (GEN+) GM350 V-8 1996	OF800300 - OK001508
350 MAG BRAVO MPI GM350 V-8 1995	OF415189 - OF601999
350 MAG BRAVO MPI (GEN+) GM350 V-8 1996	OF602000 - OK001500
5.7L ALPHA EFI (TBI) GM350 V-8 1995	OF355305 - OF752389
5.7L BRAVO (TBI) GM350 V-8 1995	OF225560 - OF752399
5.7L EFI (2BBL-TBI) GM350 V-8 1996	OF752400 - OK001505
5.7LX BRAVO EFI (GEN+) GM350 V-8 1996	OF800300 - OK001508
5.7LX EFI (4BBL-TBI) GM350 V-8 1996	OF752400 - OK001505

BOMBA DE COMBUSTIBLE ALTA PRESIÓN
HIGH PRESSURE FUEL PUMP
POMPA BENZINA ALTA PRESSIONE

Ref.	R.O. OEM
REC861156A1	861156A1

MOTORES / ENGINES / MOTORI
350 Mag M.P.I. Alpha/Bravo/Horizon/MIE/Ski
4.3L EFI/Gen+ TBI/M.P.I. Alpha/Bravo-454 Mag M.P.I.
Bravo & Horizon
5.0/5.7L EFI/M.P.I. Alpha/Bravo-502 Mag M.P.I.
7.4L M.P.I. Bravo & MIE 8.1L/8.2L MIE M.P.I.
MX6.2L M.P.I. Alpha/Bravo/Horizon & MIE Black Scorpion
Scorpion 377 Stendrive Racing
(Sin rosca) Reemplaza la bomba de combustible fría
(non threaded) Replaces cool fuel pump
(Non filettato) Sostituisce la pompa del carburante fresco

BOMBA DE COMBUSTIBLE BAJA PRESIÓN
LOW PRESSURE FUEL PUMP
POMPA BENZINA BASSA PRESSIONE

Ref.	R.O. OEM
CARP74021	

MOTORES / ENGINES / MOTORI
12 Volt.
4-6PSI /20-30 GPH
Poseen todas las medidas de seguridad exigidas. Puede usarse para trasvase de gasoil.
Listed by Marine Division UL. Used for diesel fuel transfer
Conforme con tutte le misure di sicurezza necessarie. Si può utilizzare per travasi di gasolio.

Ref.	R.O. OEM
REC3858261	805656A2 805656A5 805025A2 861155A5 805656A6 861155A6

MOTORES / ENGINES / MOTORI
V6 - V8
Modelo antiguo
Old Model
Modello vecchio
4.3Fi & Carburated 1992-93
Bomba eléctrica en línea.
Inline electric pump model.
Pompa elettrica in linea.
8 PSI, 25gpm

KIT BOMBA DE COMBUSTIBLE
HIGH PRESSURE FUEL PUMP KIT
KIT POMPA BENZINA ALTA PRESSIONE

NEW

Ref.	R.O. OEM
RECEFP-KT	

KIT JUNTAS SEPARADOR VAPOR
VAPOR SEPARATOR TANK O-RING
KIT GUARNIZIONI SEPARATORE VAPORE

Ref.	R.O. OEM
REC808500	808500

BOMBA COMBUSTIBLE Y KIT ENFRIADOR
ELECTRIC FUEL PUMP & COOLER
POMPA BENZINA E KIT SCAMBIATORE

Ref.	R.O. OEM
REC861156A04	861156A04

MOTORES / ENGINES / MOTORI
(#807950)
MPI, EFI & TB
V6 & V8
(-0K999999)

Ref.	R.O. OEM
REC861156A03	861156A03

MOTORES / ENGINES / MOTORI
(#865356)
4.3 MPI, 5.0 MPI, 350 MAG MPI, MX6.2 MPI
0M300000+

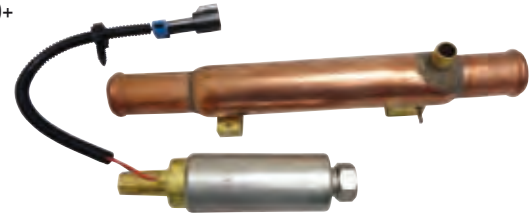

BOMBAS COMBUSTIBLE MECÁNICAS
MECHANIC FUEL PUMPS
POMPA BENZINAMECCANICHE

Ref.	R.O. OEM	FILTRO FILTER FILTRO	JUNTA GASKET GUARNIZIONE
REC862077A1	41141A2 862077A1	REC35-8M0046752	REC27-34213

MOTORES / ENGINES / MOTORI
V6; 231, 262, 229

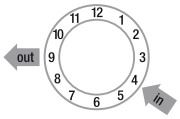

Ref.	R.O. OEM
REC62092T	62092T 62092 54552

MOTORES / ENGINES / MOTORI
Ford V8 302

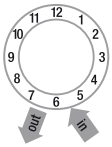

Ref.	R.O. OEM
REC862048A1	812454A1 812454A3 97399A2 862048A1 97399

MOTORES / ENGINES / MOTORI
V8; 305, 350, 454, 330, 420
Inline (4 cyl) 120, 140, 3.0L & 224 CID

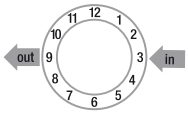

Ref.	R.O. OEM
REC86246T	86246T 86246 86246A1 78485 71646

MOTORES / ENGINES / MOTORI
V8; 305, 350, 400, 228, 250, 255, 260, 280

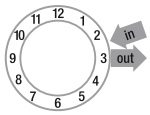

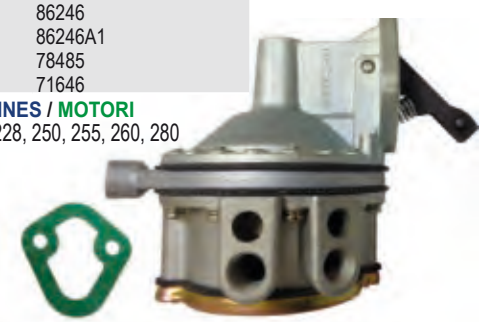

Ref.	R.O. OEM
REC86247T	86247T 86247 86247A2 78820 63196 46860

MOTORES / ENGINES / MOTORI
V8; 454 /330, 325, 350, 390

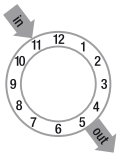

Ref.	R.O. OEM	FILTRO FILTER FILTRO
REC86234A4	86234A4 8623405 86234A3 86234 77594 71327 47585	REC35-49088A2

MOTORES / ENGINES / MOTORI
GM (4 & 6 cyl) 153, 181, 225, 250, 120 / 140 / 160 / 165 / 470 / 185 / 488

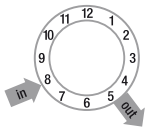

Ref.	R.O. OEM	FILTRO FILTER FILTRO
REC8M0073435	8M0073435 861676T09 861676A1 842725A3	REC35-8M0046752

MOTORES / ENGINES / MOTORI
GM 4 cyl (2.5 / 3.0L) MCM 3.7L
3.0L (SNL097000+)

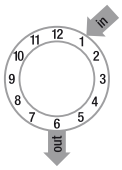

Ref.	R.O. OEM
REC8M0058164	8M0058164 97401

MOTORES / ENGINES / MOTORI
GM V8 305, 350, 228 / 230 / 260 / 898

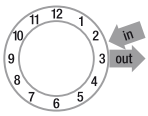

Ref.	R.O. OEM
REC861677T	861677T 818383T

MOTORES / ENGINES / MOTORI
GM V8 (454 & 502)

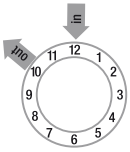

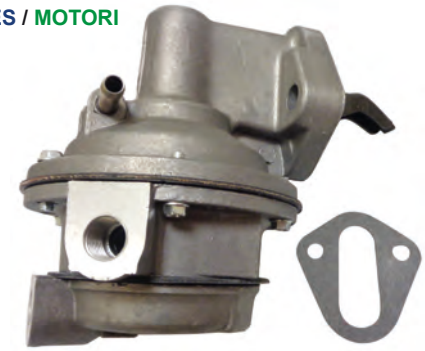

JUNTAS
GASKETS
GUARNIZIONI

Ref.	R.O. OEM
REC27-34213	27-34213
REC27-42457	27-42457
REC27-72805	27-72805
REC27-34898	27-34898

REC27-72805

REC27-34898

REC27-42457

REC27-34213

GUÍA BOMBAS MECÁNICAS
MECHANIC PUMPS APPLICATION
GUIDA POMPE MECCANICHE

MODELO MODEL MODELLO	SERIE SERIAL SERIE	REF
120	1666601- 3377340	REC86234A4
120	-4469866	REC86234A4
120	4469866 - 4952700	REC86234A4
120	4952701+	REC86234A4
120	5192049 - 6229717	REC86234A4
120/2.5L	6229718+	REC86234A4
120/2.5L	6229718+	REC8M0073435
140 (4 Cil.)	2508261 - 3332137	REC86234A4
140	-4460664	REC86234A4
140	4460665-4918569	REC86234A4
140	4918570+	REC86234A4
140 (4 Cil.)	5157669 - 6229717	REC86234A4
140/3.0L	6229718+	REC86234A4
140/3.0L	6229718+	REC8M0073435
3.0L/3.0LX	C856559+	REC8M0073435
160	2048022 - 2770031	REC86234A4
165	4471566 - 4884834	REC86234A4
165	5178959+	REC86234A4
165/3.7-LX (4 Cil.)	6916779+	REC8M0073435
170 (4 Cil.)	6916779+	REC8M0073435
180/3.7-LX (4 Cil.)	6916779+	REC8M0073435
175/4.3L (262 CID)	B527955+	REC862077A1
185 (229 CID)	6330183+	REC862077A1
185 (262 CID)	A331455+	REC862077A1
190 (4 Cil.)	6916779+	REC8M0073435
200	2453769 - 2712072	REC86234A4
200 GM	6218462+	REC8M0058164
200/5.0L GM	B525982+	REC8M0058164
205 (262 CID)	A331455+	REC862077A1
205/4.3L-LX (262 CID)	B527955+	REC862077A1
215 Ford	-3085036	REC62092T
215 Ford	3258182+	REC62092T
225 Ford	3385721+	REC62092T
228 GM	4765100 - 5170008	REC86246T
228 GM	5170009 - 6218461	REC86246T
228 GM	6218462+	REC8M0058164
230 GM Inboard	5907058+	REC8M0058164
230/5.6L-GM (IB)	B522506+	REC8M0058164
230 GM	6218462+	REC8M0058164
230/5.0L-LX GM	B525982+	REC8M0058164
233 Ford	4500860+	REC62092T
255 GM	4768000 - 4908849	REC86246T
255 GM	3258728+	REC62092T
260 GM	4175500 - 5195908	REC86246T
260 GM	5195909+	REC86246T
260/5.7 GM	4908850 - 6218461	REC86246T
260 GM Intraborda	6218461+	REC8M0058164
260/5.7L GM (IB)	B525982+	REC8M0058164
5.7L-GM	5907058+	REC8M0058164
280 GM	5907058+	REC8M0058164
300MR/TRS GM	F025000+	REC8M0058164
325-GM	4176250+	REC86246T
330 GM	6668677+	REC8M0058164

MODELO MODEL MODELLO	SERIE SERIAL SERIE	REF
330 GM/W.B.W.	2278747 - 3640670	REC86247T
340/7.4L-GM (IB)	4623115+	REC86247T
350 GM	6083145+	REC862048A1
350-GM (MAGNUM)	5889914+	REC862048A1
350 (MAG-TOURNEY SKI)	3780450+	REC86247T
370 TRS-GM	A635178+	REC8M0058164
390-GM	D505450+	REC8M0058164
420-GM	6721528+	REC862048A1
425-GM	2781129 - 2825059	REC86247T
454 GM (MAGNUM)	A398941+	REC862048A1
454 MAG. BRAVO GM	A398941+	REC862048A1
470	A631894 +	REC862048A1
470	B840126+	REC862048A1
470	-5097479	REC86234A4

MODELO MODEL MODELLO	SERIE SERIAL SERIE	REF
470	5097480+	REC86234A4
485	5520115 - 6218036	REC86234A4
488	6218037+	REC86234A4
888 Ford	5685394+	REC86234A4
898/198-GM	6170297+	REC86234A4
898 GM	3108723+	REC62092T
5.7 GM (SKI)	4762210 - 6218461	REC86246T
5.7 GM (SKI)	6218462+	REC8M0058164
5.7L BRAVO (GM)350	A338553+	REC8M0058164
7.4L BRAVO GM	B514627+	REC8M0058164
7.4L W/HURTH (IB)	B525982+	REC8M0058164
7.4 BRAVO (Gen V)	B771113+	REC862048A1
7.4 BRAVO (Gen VI)	C391564+	REC862048A1
454 MAG BRAVO MPI (Gen VI) 1996-97		REC861677T

DISTRIBUIDOR
DISTRIBUTOR
SPINTEROGENO

TAPA DISTRIBUIDOR
DISTRIBUTOR CAPS
CALOTTE SPINTEROGENO

Ref.	R.O. OEM
REC33708	33708

MOTORES / ENGINES / MOTORI
Delco V8

Ref.	R.O. OEM
REC33765T	33765T 33765

MOTORES / ENGINES / MOTORI
Delco 6 Cil

Ref.	R.O. OEM
REC982209	391-5075 391-5075Q1 F16900148

MOTORES / ENGINES / MOTORI
MALLORY V8
Tapa alta
High cap
Calotta alta

Ref.	R.O. OEM
REC835702	392-6318 392-6318T FI6900184

MOTORES / ENGINES / MOTORI
Prestolite V8
Con clip
with clip
con clip

Ref.	R.O. OEM
REC392-9086T	392-9086 392-9086T

MOTORES / ENGINES / MOTORI
Prestolite V6

Ref.	R.O. OEM
REC392-9766	392-9766 392-9766Q1 392-9766T FI6900185

MOTORES / ENGINES / MOTORI
Prestolite V8
Con tornillo
with nut
con chiusura a vite

Ref.	R.O. OEM
REC393-4988	393-4988 393-3230 393-4988T 393-4988T2

MOTORES / ENGINES / MOTORI
Autolite 8 Cyl

Ref.	R.O. OEM
REC805759Q01	805759Q01 805759A2 805759A1 90746A1 805759A5 805759T2 805759T1 16457A4 805759T2 43557A1 43557

MOTORES / ENGINES / MOTORI
Merc. V8

Ref.	R.O. OEM	ROTOR ROTOR ROTORE
REC3854260	811635T3	REC3854261

MOTORES / ENGINES / MOTORI
Delco 4 cil & 3.0LX

Ref.	R.O. OEM	ROTOR ROTOR ROTORE
REC3854548	808483T3 808483 804483T 804418	REC3854549

MOTORES / ENGINES / MOTORI
Delco V8 E. elect.

Ref.	R.O. OEM	ROTOR ROTOR ROTORE
REC3854331	850484T2 850484T 850484	REC3854311

MOTORES / ENGINES / MOTORI
Delco V6 E. elect.

Ref.	R.O. OEM
REC393-9459Q1	393-9459Q1 393-3230 393-4988T 393-4988T2

MOTORES / ENGINES / MOTORI
Delco 4 Cil

Ref.	R.O. OEM
REC815407A2	815407A2 13753A2 815407Q02

MOTORES / ENGINES / MOTORI
Merc. V6

Ref.	R.O. OEM
REC985218	

MOTORES / ENGINES / MOTORI
(1987-90)
Ford 2.3L
Con / With / Con: MALLORY DISTRIBUTOR

Ref.	R.O. OEM	ROTOR ROTOR ROTORE
REC898253T23	888731 898253T23	REC898253013

MOTORES / ENGINES / MOTORI
4.3L Vortec V6 MPI

Ref.	R.O. OEM	ROTOR ROTOR ROTORE
REC898253T22	884792 898253T22	REC898253013

MOTORES / ENGINES / MOTOI
Vortec V8 MPI
Modernos / late / moderna

ROTORES
ROTORS
ROTORI

Ref.	R.O. OEM
REC898253013	898253013 884790 8M6001222

MOTORES / ENGINES / MOTORI
Vortec V6 & V8 MPI

Ref.	R.O. OEM
REC8M6001252	898253009 8M6001252

MOTORES / ENGINES / MOTORI
GM V8 HEI-1998 +
(excepto/ except / ecceto MPI 555 ECM)

Ref.	R.O. OEM
REC65864	65864 78016

MOTORES / ENGINES / MOTORI
Autolite V8 Mercury

Ref.	R.O. OEM
REC58217	58217 898253008 58217Q 8M6001251

MOTORES / ENGINES / MOTORI
Delco 4 & 6 Cil

Ref.	R.O. OEM
REC89825302	391-5088 391-7057 898253029 391-7057T 8M6001224 FI6901224

MOTORES / ENGINES / MOTORI
Mallory V8

Ref.	R.O. OEM
REC834975	392-6326 392-6326T FI6900044

MOTORES / ENGINES / MOTORI
Prestolite V8

Ref.	R.O. OEM
REC3853801	392-9089 392-9767 392-9089T 392-9089Q FI6900186 FI6900190

MOTORES / ENGINES / MOTORI
Presolite V6 & V8

Ref.	R.O. OEM
REC3854549	8M6001253 808484 8084841 898253010

MOTORES / ENGINES / MOTORI
Delco V8 E. eléc.

Ref.	R.O. OEM
REC3854311	850485 8504851 898253012 8M0062084 804424

MOTORES / ENGINES / MOTORI
Delco V6

Ref.	R.O. OEM
REC3854261	811636 8M6001254 8116361 898253011

MOTORES / ENGINES / MOTORI
Delco 4 cil.
3.0LX

TRIGGERS (ROTOR + SENSOR)
TRIGGERS (ROTOR + SENSOR WHEEL)
TRIGGER (ROTORI + SENSORE)

Ref.	R.O. OEM
REC13524A6	13524A6 13524Q06 13524A4 19405A4 90576A4

MOTORES / ENGINES / MOTORI
Merc. V6

Ref.	R.O. OEM
REC13524A1	13524A1 13524T1 13524A5

MOTORES / ENGINES / MOTORI
Merc. V8

PLATINOS
POINTS
PUNTINE

Ref.	R.O. OEM
REC8M6001219	392-898253005 392-6325 8M6001219 FI6900031

MOTORES / ENGINES / MOTORI
Prestolite

Ref.	R.O. OEM
REC34235T	34235 34235T

MOTORES / ENGINES / MOTORI
Delco

Ref.	R.O. OEM
REC33700	33700

MOTORES / ENGINES / MOTORI
Delco

Ref.	R.O. OEM
REC58033	58033 898253007

MOTORES / ENGINES / MOTORI
Autolite

Ref.	R.O. OEM
REC71831	87-71831 64850

MOTORES / ENGINES / MOTORI
Mercury

Ref.	R.O. OEM
REC391-5090	391-5090 391-898253004 8M6001250

MOTORES / ENGINES / MOTORI
Mallory

CONDENSADORES
CONDENSERS
CONDENSATORI

Ref.	R.O. OEM
REC8M6001249	392-6324 392-898223002 8M6001249 FI6900023 FI6900032 FI69000083 FI6900189

MOTORES / ENGINES / MOTORI
Prestolite V8

Ref.	R.O. OEM
REC33662	33662 898253003 6325 898253005 33662Q 8M6001218 FI6900031

MOTORES / ENGINES / MOTORI
Delco 4 & 6 Cil.

Ref.	R.O. OEM
REC64851	81-64851 58034

MOTORES / ENGINES / MOTORI
Autolite

Ref.	R.O. OEM
REC8M6001217	391-5092 391-898253001 391-5093 8M6001217 FI6900040

MOTORES / ENGINES / MOTORI
Mallory V8,
Delco 4 & 6 Cil.

Ref.	R.O. OEM
REC33706	33706

MOTORES / ENGINES / MOTORI
Delco V-8

KITS DE ENCENDIDO
TUNE UP KITS
KIT D'ACCENSIONE

Ref.	R.O. OEM
REC3423A1	34235A1 34235Q1

MOTORES / ENGINES / MOTORI
Delco 4 & 6 cil.

Ref.	R.O. OEM
REC391-5090Q1	391-5090A1 391-5090Q1

MOTORES / ENGINES / MOTORI
Mallory V8

Ref.	R.O. OEM
REC801766	801766

MOTORES / ENGINES / MOTORI
Delco V8

Ref.	R.O. OEM
REC801767	801767

MOTORES / ENGINES / MOTORI
Merc. V8

Ref.	R.O. OEM
REC801768	801768

MOTORES / ENGINES / MOTORI
Autolite 8 Cil

Ref.	R.O. OEM
REC392-6324Q1	392-6324A1 392-6324Q1 392-6324T1

MOTORES / ENGINES / MOTORI
Prestolite V6 & V8

Ref.	R.O. OEM
REC392-6325Q1	392-6325A1 392-6325Q1 392-6325T1

MOTORES / ENGINES / MOTORI
Prestolite V8

GUÍA KITS DE ENCENDIDO
IGNITION APPLICATION GUIDE
GUIDA KIT ACCENSIONE

MODELO MODEL MODELLO	CYL	ARRANQUE IGNITION AVVIAMENTO	YEAR AÑO ANNO	SERIE SERIAL SERIE	KIT	PLATINO POINT PUNTINE	CONDENSADOR CONDENSER CONDENSATORE	ROTOR ROTOR ROTORE
110	L-4	Delco	1963-66	1537370-2044033	**REC3423A1**	REC34235T	REC33662	REC1396-5238
120	L-4	Delco	1964-74	1666601-3825578	**REC3423A1**	REC34235T	REC33662	REC1396-5238
120/2.5L	L-4	Delco	1974-89	3825579-0C853255	**REC3423A1**	REC34235T	REC33662	REC1396-5238
140	L-4	Delco	1968-74	2508261-3826282	**REC3423A1**	REC34235T	REC33662	REC1396-5238
140/3.0L	L-4	Delco	1974-89	3826283-0C856558	**REC3423A1**	REC34235T	REC33662	REC1396-5238
3.0L/LX	L-4	Prestolite	1990-95	0C856559-0F603999	**REC392-6324Q1**	REC8M6001219	REC8M6001249	REC3853801
165/3.7L	L-4	Delco	1987-89	0B434940+	**REC3423A1**	REC34235T	REC33662	REC1396-5238
170	L-4	Delco	1985-86	6916779-0B434940	**REC3423A1**	REC34235T	REC33662	REC1396-5238
180/3.7LX	L-4	Delco	1987-89	0B436391+	**REC3423A1**	REC34235T	REC33662	REC1396-5238
180/3.7LX	L-4	Prestolite	1987-89	0B436391+	**REC392-6324Q1**	REC8M6001219	REC8M6001249	REC3853801
190	L-4	Delco	1985-86	6916779-0B436390	**REC3423A1**	REC34235T	REC33662	REC1396-5238
470	L-4	Delco	1976-84	4208730-691778	**REC3423A1**	REC34235T	REC33662	REC1396-5238
485	L-4	Delco	1980-82	5685394-6218036	**REC3423A1**	REC34235T	REC33662	REC1396-5238
488	L-4	Delco	1983-84	6170297-6916778	**REC3423A1**	REC34235T	REC33662	REC1396-5238
Todos / All / Tutti Prestolite	L-4			Todos / All / Tutti	**REC392-6324Q1**	REC8M6001219	REC8M6001217	REC3853801
Repuesto (4 Cil.)								
140	L-6	Delco	1963	1538930-1725960	**REC3423A1**	REC34235T	REC33662	REC1396-5238
150	L-6	Delco	1964-66	1666495-2048046	**REC3423A1**	REC34235T	REC33662	REC1396-5238
160	L-6	Delco	1967-69	2048022-2494926	**REC3423A1**	REC34235T	REC33662	REC1396-5238
160	L-6	Delco	1969	2494927-2770031	**REC3423A1**	REC34235T	REC33662	REC1396-5238
165	L-6	Delco	1971-81	2771484-5813433	**REC3423A1**	REC34235T	REC33662	REC1396-5238
165	L-6	Delco	1970	2770032-2771483	**REC3423A1**	REC34235T	REC33662	REC1396-5238
200	L-6	Delco	1969	2453769-2712072	**REC3423A1**	REC34235T	REC33662	REC1396-5238
Todos / All / Tutti Prestolite	L-6			Todos / All / Tutti	**REC392-6324Q1**	REC8M6001219	REC8M6001249	REC3853801
Repuesto (6 Cil.)								
185 (4 BBL.) (3.8L)	V-6	Prestolite	1983-84	6330183-6919655	**REC392-6324Q1**	REC8M6001219	REC8M6001249	REC3853801
190 (GM 283)	V-8	Delco	1963-64	1564539-1730903	**REC801766**	N/D	N/D	N/D
215 MCM y MIE (Ford 302)	V-8	Autolite	1970-72	2781153-3563181	**REC801768**	REC3302-804844002	REC64851	REC65864
215 MCM y MIE (Ford 302)	V-8	Mallory	1970-72	2781153-3562181	**REC391-5090Q1**	REC391-5090	REC8M6001217	REC89825302
225 MCM y MIE	V-8	Autolite	1973-74	3385721-4166999	**REC801768**	REC3302-804844002	REC64851	REC65864
225 MCM y MIE	V-8	Mallory	1973-74	3385721-4166999	**REC391-5090Q1**	REC391-5090	REC8M6001217	REC89825302
225 MCM y MIE	V-8	Mercury	1973-74	3385721-4166999	**REC801767**	REC71831	REC64851	REC65864
888 (Ford 302)	V-8	Mercury	1971-77	3108723-4887829	**REC801767**	REC71831	REC8M6001217	REC65864
888 (Ford 302)	V-8	Prestolite	1971-77	3108723-4887829	**REC392-6325Q1**	REC8M6001219	REC8M6001249	REC834975
888 (Ford 302)	V-8	Mallory	1971-77	3108723-4887829	**REC391-5090Q1**	REC391-5090	REC8M6001217	REC89825302
888 (Ford 302)	V-8	Autolite Ign.	1971-77	3108723-4887829	**REC801768**	REC3302-804844002	REC64851	REC65864
225 (GM 327)	V-8	Delco	1963-69	1539620-2694014	**REC801766**			
228 MCM y MIE	V-8	Mallory	1977-82	4765100-6218461	**REC391-5090Q1**	REC391-5090	REC8M6001217	REC89825302
898/198 MCM y MIE	V-8	Mallory	1977-82	4762210-6218461	**REC391-5090Q1**	REC391-5090	REC8M6001217	REC89825302
233 MCM y MIE	V-8	Mercury	1975-77	4173000-4902304	**REC801767**	REC71831	REC64851	REC65864
233 MCM y MIE	V-8	Prestolite with	1975-77	4173000-4902304	**REC392-6325Q1**	REC8M6001219	REC8M6001249	REC834975
233 MCM y MIE	V-8	Prestolite with	1975-77	4173000-4902304	**REC392-6324Q1**	REC8M6001219	REC8M6001249	REC3853801
250 (GM 350)	V-8	Mallory	1977	4768000-4908849	**REC391-5090Q1**	REC391-5090	REC8M6001217	REC89825302
255 MIE y MCM (Ford 351)	V-8	Mallory	1973-80	3258728-5907057	**REC391-5090Q1**	REC391-5090	REC8M6001217	REC89825302
255 MCM y MIE (Ford 351)	V-8	Mercury	1973-80	3258728-5907057	**REC801767**	REC71831	REC64851	REC65864
255 (GM 350)	V-8	Mallory	1975-76	3258728-4501254	**REC391-5090Q1**	REC391-5090	REC8M6001217	REC89825302
255 (GM 350)	V-8	Mercury	1976	4498701-4767999	**REC801767**	REC71831	REC64851	REC65864
260	V-8	Mallory	1978-82	4908850-6128461	**REC391-5090Q1**	REC391-5090	REC8M6001217	REC89825302
5.7L Ski	V-8	Mallory Ign.	1985-95	0A338533-0F775199	**REC391-5090Q1**	REC391-5090	REC8M6001217	REC89825302
5.7L Ski	V-8	Prestolite	1985-95	0A338533-0F775199	**REC392-6324Q1**	REC8M6001219	REC8M6001249	REC3853801
280 TRS	V-8	Mercury	1975	4176250-4499390	**REC801767**	REC71831	REC64851	REC65864
280 TRS	V-8	Mallory	1976	4499391-4770199	**REC391-5090Q1**	REC391-5090	REC8M6001217	REC89825302
330 MCM y MIE	V-8	Mallory	1977-81	4623115-6083144	**REC391-5090Q1**	REC391-5090	REC8M6001217	REC89825302
370 TRS	V-8	Mallory	1978-85	4179554-6721527	**REC391-5090Q1**	REC391-5090	REC8M6001217	REC89825302
370 TRS	V-8	Holley	1978-85	4883520-6721527	**REC801767**	REC71831	REC64851	REC65864
400 TRS	V-8	Mallory	1980-86	5668232-0B457644	**REC391-5090Q1**	REC391-5090	REC8M6001217	REC89825302
400 TRS	V-8	Holley	1980-86	5668232-0B457644	**REC801767**	REC71831	REC64851	REC65864
440 TRS	V-8	Mallory	1983-86	6181070-0B485220	**REC391-5090Q1**	REC391-5090	REC8M6001217	REC89825302
440 TRS	V-8	Holley	1983-86	6181070-0B485220	**REC801767**	REC71831	REC64851	REC65864
460 TRS	V-8	Mallory Ign.	1983-86	6180970-6181046	**REC391-5090Q1**	REC391-5090	REC8M6001217	REC89825302
460 TRS	V-8	Holley Ign.	1983-86	6180970-6181046	**REC801767**	REC71831	REC64851	REC65864

KITS DE CONVERSIÓN ELECTRÓNICO
ELECTRONIC CONVERSION KITS
KIT DI CONVERSIONE ELETTRICO

- Sustituyen condensadores y contactos por componentes electrónicos.
- Usa bobina, tapa y rotor estandard.
- De fácil instalación, una pieza y dos cables.
- Precisión entre 1/4" calibrado de 0 a 8000 rpm.
- To subsitute condensers for electronic devices
- Uses standard.coil, cap & rotor
- Easy installation; one piece, two cables.
- Precisely calibrated between 1/4" from 0 to 8000
- Sustituisce condensatori e contatti per componenti eletronici.
- Uilizza bobina, calotta e rotore standard.
- Facile installazione, una pz e due cavi.
- Precisione 1/4" calibrato da 0 a 8000.

Ref.	R.O. OEM
REC26900	

MOTORES / ENGINES / MOTORI
GM 4 cil.

Ref.	R.O. OEM
REC26904	

MOTORES / ENGINES / MOTORI
Para la mayoría de distribuidores de 8 cilindros Mallory YL o YD con rotación reloj y contrareloj.
For most Mallory V8 distributors.
Per la maggior parte delli spinterogeni da 8 cil Mallory YL o YD conratozione std e controrotante.

Ref.	R.O. OEM
REC26903	

MOTORES / ENGINES / MOTORI
Para distribuidores Prestolite V8 con clip en la tapa.
For most Prestolite V8 distributors with clip on cap
Per spinterogeni Prestolite V8 con clip nella calotta

Ref.	R.O. OEM
REC26902	

MOTORES / ENGINES / MOTORI
Para la mayoría de distribuidores Prestolite V8 con tornillo en la tapa.
For most Prestolite V8 distributors with screw on cap
Per la maggior parte degli spinterogeni Prestolite V8 con vite nella calotta

Ref.	R.O. OEM
REC26901	

MOTORES / ENGINES / MOTORI
Para la mayoría de distribuidores de 6 cilindros Delco.
For most Delco 6 cyl. distributors.
Per la maggior parte delli spinterogeni da 6 cil Delco.

GUÍA KITS DE CONVERSIÓN ELECTRÓNICO
ELECTRONIC CONVERSION KITS APPLICATION
GUIDA KIT DI CONVERSIONE ELETTRICO

MODELO MODEL MODELLO	CYL	ARRANQUE IGNITION AVVIAMENTO	SERIE SERIAL SERIE	DISTRIBUIDOR DISTRIBUTOR DISTRIBUTTORE	REF
470R	4	Delco	6218037	Todos / All / Tutti	REC26900
485	4	Delco	5685394	Todos / All / Tutti	REC26900
488R	4	Delco	6170297	Todos / All / Tutti	REC26900
140	6	Delco	1538930 - 1725960	Todos / All / Tutti	REC26901
150	6	Delco	1666495 - 2048046	Todos / All / Tutti	REC26901
160	6	Delco	2048022 - 2770031	Todos / All / Tutti	REC26901
165	6	Delco	2770032	Todos / All / Tutti	REC26901
Alpha 1/120-140	6	Delco	6229718	Todos / All / Tutti	REC26901
200	6	Delco	2453769 - 2712072	Todos / All / Tutti	REC26901
190	8	Delco	1564539 - 1730903	Todos / All / Tutti	
198	8	Mallory	4776402	Excepto / Except / Ecceto YL670AV	REC26904
215	8	Mallory	2781153	Excepto / Except / Ecceto YL670AV	REC26904
225	8	Delco	1539620 - 2694014	Todos / All / Tutti	
225	8	Mallory	3385721	Excepto / Except / Ecceto YL670AV	REC26904
228	8	Mallory	4765100 - 6218461	Excepto / Except / Ecceto YL670AV	REC26904
233	8	Prestolite	4173000	Todos / All / Tutti	REC26903
233	8	Prestolite tornillo bajo tapa	4173000	Todos / All / Tutti	REC26902
198	8	Mallory	4776402	Excepto / Except / Ecceto YL670AV	REC26904
250	8	Mallory	4768000 - 4908849	Excepto / Except / Ecceto YL670AV	REC26904
255	8	Mallory	3258728	Excepto / Except / Ecceto YL670AV	REC26904
260	8	Mallory	4908850 - 6218461	Excepto / Except / Ecceto YL670AV	REC26904
260	8	Mallory intraborda	A338553+	Excepto / Except / Ecceto YL670AV	REC26904
280	8	Mallory	4499391	Excepto / Except / Ecceto YL670AV	REC26904
330	8	Mallory	4623115	Excepto / Except / Ecceto YL670AV	REC26904
370, 400, 440, 460TRS	8	Mallory	4179554	Excepto / Except / Ecceto YL670AV	REC26904
888	8	Mallory	3108723	Excepto / Except / Ecceto YL670AV	REC26904
888	8	Prestolite	3108723	Todos / All / Tutti	REC26903
888	8	Mallory	4762210 - 6218461	Excepto / Except / Ecceto YL670AV	REC26904
5.7	8	Ski Mallory	85B14627+	Excepto / Except / Ecceto YL670AV	REC26904

DISTRIBUIDOR DELCO VOYAGER®
DISTRIBUTOR DELCO VOYAGER®
SPINTEROGENO DELCO VOYAGER®

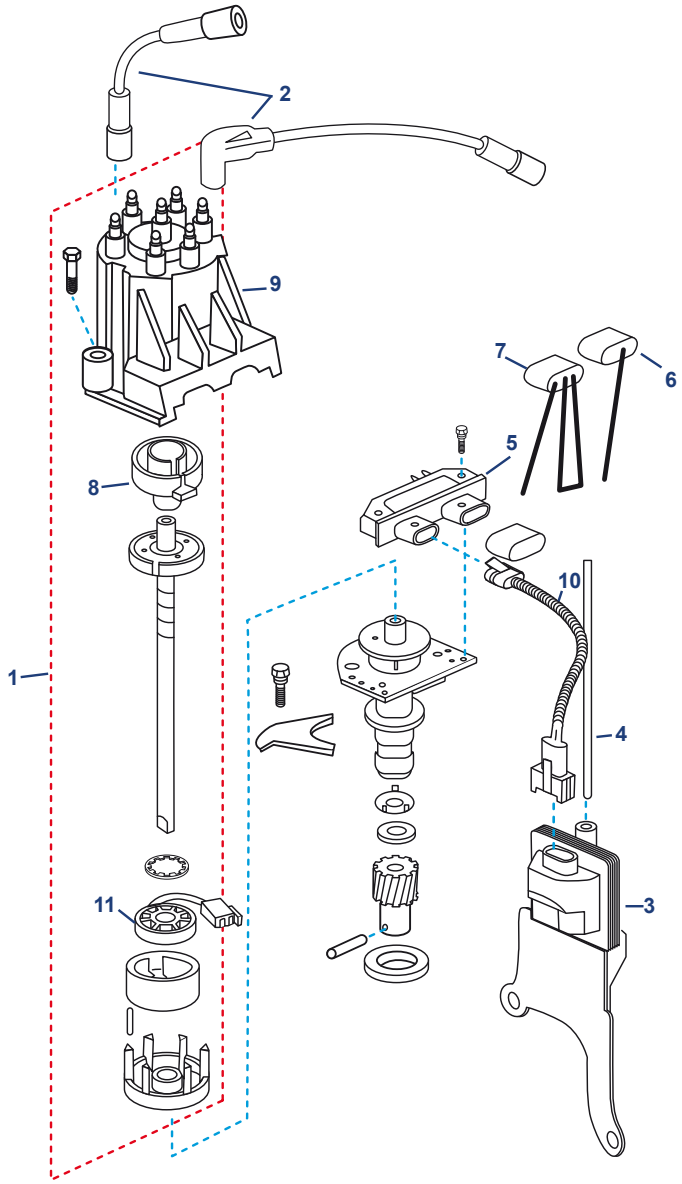

Nº	Ref.	R.O. OEM	Descripción	Description	Descrizione
1	**REC817377**	817377	DISTRIBUIDOR 4 CYL	DISTRIBUTOR 4 CYL	DISTRIBUTORE 4 CYL
1	**REC807964A1**	807964A1	DISTRIBUIDOR 6 CYL	DISTRIBUTOR 6 CYL	DISTRIBUTORE 6 CYL
1	**REC805222A1**	805222A1	DISTRIBUIDOR 8 CYL	DISTRIBUTOR 8 CYL	DISTRIBUTORE 8 CYL
2	**REC15-405**	84-816761Q13	KIT CABLE ARRANQUE: 3.0L	IGNITION WIRE SET: 3.0L	KIT CAVI INIEZIONE: 3.0L
2	**REC15-601**	84-816761Q16	KIT CABLE ARRANQUE: V6	IGNITION WIRE SET: V6	KIT CAVI INIEZIONE: V6
2	**REC15-804**	84-816761Q17	KIT CABLE ARRANQUE: V8	IGNITION WIRE SET: V8	KIT CAVI INIEZIONE: V8
3	**REC3854002**	898253T27	BOBINA ARRANQUE	COIL: IGNITION	BOBINA INIEZIONE
4	**REC84-817376T01**	84-817376T01	CABLE: DISTRIBUIDOR - BOBINA	WIRE LEAD: DIST- COIL	CAVO: DISTRIBUZIONE - BOBINA
5	**REC3854003**	811637001	MÓDULO DISTRIBUIDOR	MODULE: DISTRIBUTOR	MODULO DISTRIBUZIONE
6	**REC294005**		CABLE: INTERRUPTOR	WIRE: SHIFT INTERUPTER	CAVO: INTERRUTTORE
7	**REC91-888863**	91-888863	HERRAMIENTA DISTRIBUIDOR	TOOL: TIMING	STRUMENTO DISTRIBUZIONE
8	**REC3854311**	850485	ROTOR V6	ROTOR V6	ROTORE V6
8	**REC3854549**	8M6001253	ROTOR V8	ROTOR: V8	ROTORE: V8
8	**REC3854261**	8M6001254	ROTOR 4 CYL	ROTOR 4 CUL	ROTORE 4 CYL
9	**REC3854260**	3854260	TAPA 4 CYL	CAP 4 CYL	COPERCHIO 4 CYL
9	**REC3854311**	3854311	TAPA 6 CYL	CAP 6 CYL	COPERCHIO 6 CYL
9	**REC3854548**	3854548	TAPA 8 CYL	CAP 8 CYL	COPERCHIO 8 CYL
10	**REC500442**		CABLE: BOBINA	WIRE LEAD: COIL HARNESS	CAVO BOBINA
11	**REC3854001**	811639T	MÓDULO IMPULSOS	MODULE	MODULO

DISTRIBUIDOR MPI V6 & V8
DISTRIBUTOR MPI V6 & V8
SPINTEROGENO MPI V6 & V8

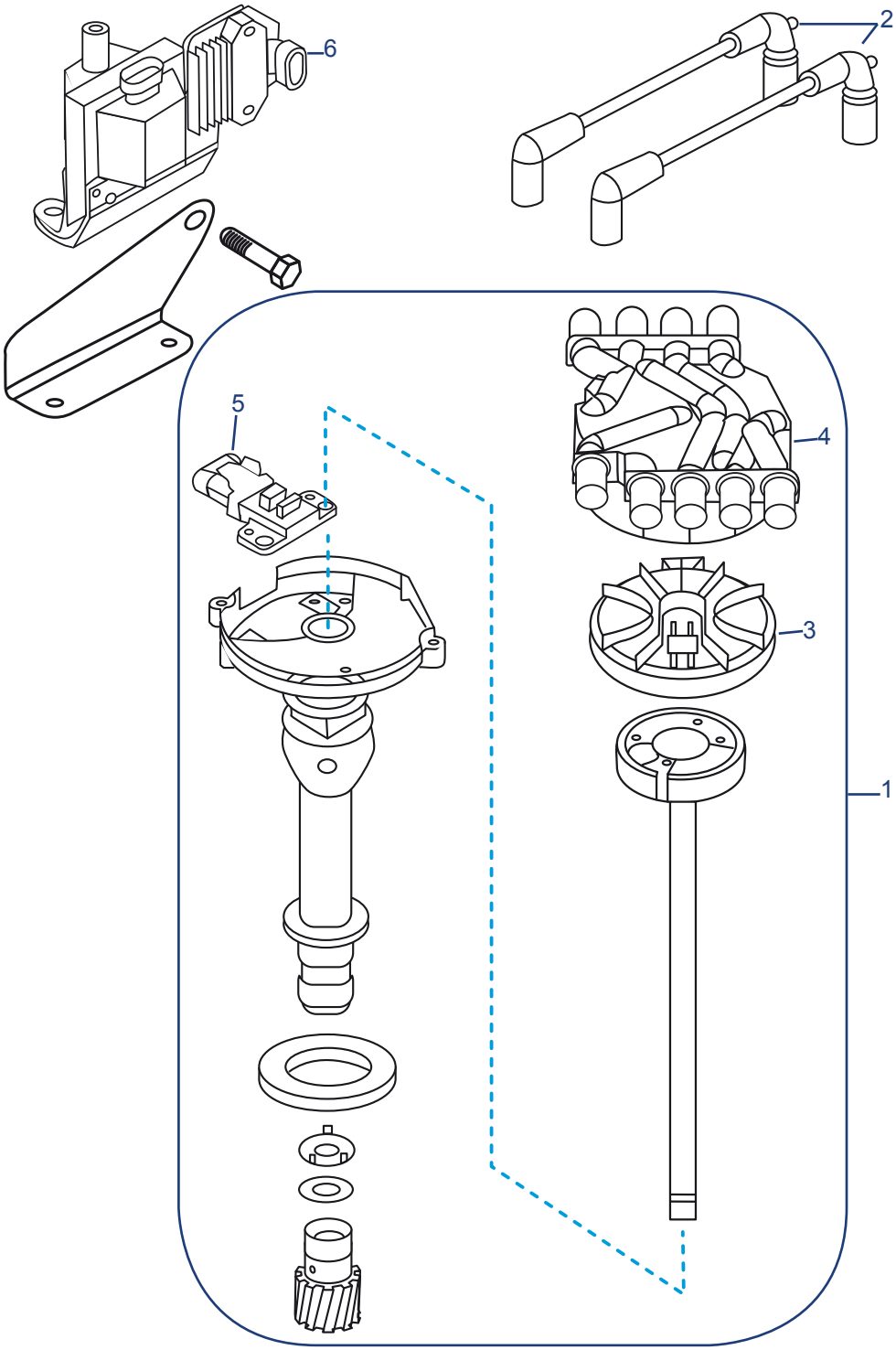

Nº	Ref.	R.O./ OEM	Descripción	Description	Descrizione
1	**REC40005334**	888751A03	DISTRIBUIDOR V6	DISTRIBUTOR V6	DISTRIBUTORE V6
1	**REC21622232**	879150A87	DISTRIBUIDOR V8	DISTRIBUTOR V8	DISTRIBUTORE V8
2	**REC15-606**	84-863656A2	KIT CABLES V6	WIRES KIT V6	KIT CAVI V6
2	**REC15-815**	84-816608A1	KIT CABLES V8 (5.0L, 5.7L)	WIRES KIT V8 (5.0L, 5.7L)	KIT CAVI V8 (5.0L, 5.7L)
2	**REC15-813**	84-863656A1	KIT CABLES V8 (6.2L)	WIRES KIT V8 (6.2L)	KIT CAVI V8 (6.2L)
3	**REC898253013**	8M6001222	ROTOR	ROTOR	ROTORE
4	**REC898253T23**	898253T23	TAPA V6	CAP V6	COPERCHIO V6
4	**REC898253T22**	898253T22	TAPA V8	CAP V8	COPERCHIO V8
5	**REC3863130**	898141	SENSOR POSICIÓN ÁRBOL DE LEVAS	POSITION SENDER CRANKSHAFT	SENSORE POSIZIONE ALBERO A CAMME
6	**REC3861985**	392-8M0054588	BOBINA ENCENDIDO	IGNITION COIL	BOBINA INIEZIONE

DISTRIBUIDOR THUNDERBOLT IV & V
DISTRIBUTOR ASSEMBLY IV & V
SPINTEROGENO THUNDERBOLT IV E V

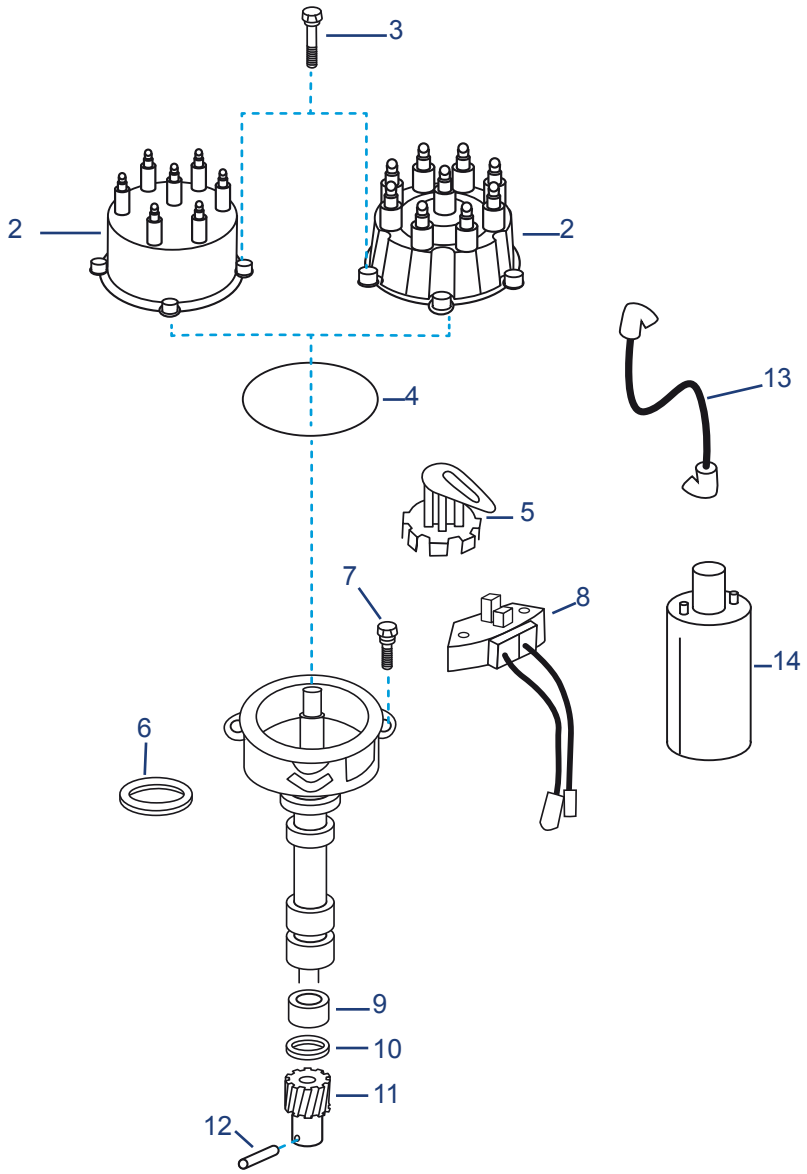

Nº	Ref.	R.O./ OEM	Descripción	Description	Descrizione
1	**REC805185A3**	805185A37	DISTRIBUIDOR V6 CON TERMINAL	DISTRIBUTOR ASSY. V6 W/BULLET	SPINTEROGENO V6 CON TERMINALI
1	**REC805185A36**	805185A36	DISTRIBUIDOR V8 CON TERMINAL	DISTRIBUTOR ASSY. V8 W/BULLET	SPINTEROGENO V8 CON TERMINALI
2	**REC815407A2**	815407Q02	TAPA DISTRIBUIDOR V6	DISTRIBUTOR CAP V6	CALOTTA V6
2	**REC805759Q01**	805759Q01	TAPA DISTRIBUIDOR V8	DISTRIBUTOR CAP V8	CALOTTA V6
3	**REC10-90926**	10-90926	TORNILLO	SCREW	VITE
4	**REC27-805760**	27-805760	JUNTA	GASKET	COPERCHIO
5	**REC13524A6**	13524Q06	ROTOR V6	ROTOR ASSEMBLY.	ROTORE V6
5	**REC13524A1**	13524T1	ROTOR V8	ROTOR ASSEMBLY	ROTORE V8
6	**REC27-344861**	27-34486-3	JUNTA	GASKET	GUARNIZIONE
7	**REC10-66686**	10-66686	TORNILLO 1”	SCREW 1”	VITE 1”
8	**REC87-892150Q02**	87-892150Q02	MÓDULO DISTRIBUIDOR	SENSOR ASSEMBLY	MODULO SPINTEROGENO
9	**REC23-90915**	23-90915	CASQUILLO	BUSHING	BOCCOLA
10	**REC12-90931**	12-90931	ARANDELA	WASHER	RONDELLA
11	**REC43-818807**	43-818807	PIÑÓN DELCO	DRIVE GEAR	PIGNONE DELCO
12	**REC17-47617**	17-47617	PASADOR	PIN	CHIAVISTELLO
13	**REC15-601**	84-816761Q16	KIT CABLES BUJÍAS V6	WIRES KIT V6	KIT CAVI V6
13	**REC15-804**	84-816761Q17	KIT CABLES BUJÍAS V8	WIRES KIT V8	KIT CAVI V8
14	**REC300-00879**	392-805570A2	BOBINA	COIL	BOBINA

DISTRIBUIDOR ELECTRÓNICO
ELECTRONIC DISTRIBUTOR
SPINTEROGENO ELETTRICO

Ref.	R.O. OEM
REC805185A3	805185A3

MOTORES / ENGINES / MOTORI
V6. HEI Modernos / late / moderno

Ref.	R.O. OEM
REC805185A36	805185A36

MOTORES / ENGINES / MOTORI
V8. HEI Modernos / late / moderno

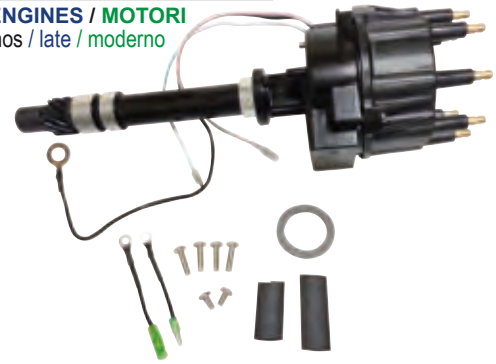

Ref.	R.O. OEM
REC817377	817377 817377T

NEW

MOTORES / ENGINES / MOTORI
181 RX
(LX - MPI)
Delco est ignition

Ref.	R.O. OEM
REC807964A1	807964A1 907964A1

NEW

MOTORES / ENGINES / MOTORI
V6
(EFI - TBI)

Ref.	R.O. OEM
REC805222A1	805222A1

NEW

MOTORES / ENGINES / MOTORI
V8
(EFI - TBI - MPI)
262-454 & 452
excepto 384 / 409
except 384 / 409
eccetto 384 / 409

DISTRIBUIDOR
DISTRIBUTOR
SPINTEROGENO

Ref.	R.O. OEM
REC40005334	888751A03 88751A02 888751A1

MOTORES / ENGINES / MOTORI
Vortec V6 4.3l MPI (2002+)
(0M300000+)

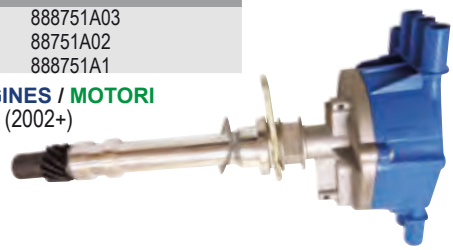

Ref.	R.O. OEM
REC21622232	884794A02 879150A87 884794A1

MOTORES / ENGINES / MOTORI
Vortec V8 2001+
5.0L, 5.7L, 6.2L MPI
(OM300000 +)

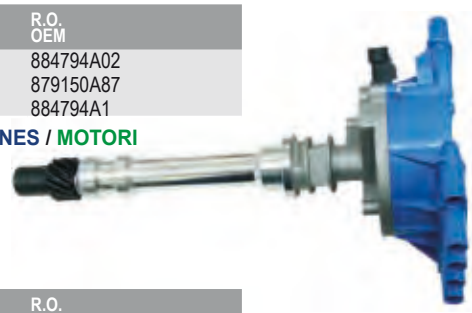

Ref.	R.O. OEM
REC195141	87581T 195141 87581 62424 58231 52352 33266

MOTORES / ENGINES / MOTORI
GM 4 CIL. (120 & 140)
MALLORY YL673AV

Ref.	R.O. OEM
REC17177A1	17177A1 91823A3 816148A1 74905A3 68521A4 68521A3 13447A1

MOTORES / ENGINES / MOTORI
GM V8. (Small & large block)
MALLORY YL 624 AV

Ref.	R.O. OEM
REC392-6316	392-6316

MOTORES / ENGINES / MOTORI
FORD 302 CID V8
MALLORY YL512CV

Ref.	R.O. OEM
REC392-6330	392-6330

MOTORES / ENGINES / MOTORI
FORD 351 CID V8
MALLORY YL554CV

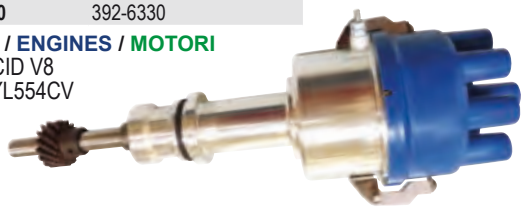

BOBINAS
COILS
BOBINE

ENCENDIDO ELECTRÓNICO
ELECTRONIC IGNITION
ACCENSIONE ELETTRONICA

Ref.	R.O. OEM
REC300-00879	392-805570A2 392-7803A4

NO USA RESISTENCIA EXTERNA
USE WITHOUT EXTERNAL RESISTOR
NON UTILIZZA RESISTENZA ESTERNA

HEI
Sistema de encendido Thunderbolt
Thunderbolt ignition sistem
Sistema di accensione Thunderbolt

Ref.	R.O. OEM
REC1463-9382	898253T24 392-806529A1 32193A2 38547

USA RESISTENCIA EXTERNA
USE WITH EXTERNAL RESISTOR
UTILIZZA RESISTENZA ESTERNA

DELCO 1115202

BOBINA ENCENDIDO
IGNITION COIL
BOBINA ELETTRONICA

Ref.	R.O. OEM
REC3854002	898253T27 817378 817378T

MOTORES / ENGINES / MOTORI
4 CIL. (V6 & V8)

Ref.	R.O. OEM
REC3859078	392-889925

MOTORES / ENGINES / MOTORI
8.1L & 496 Mag (OM315053 +)

Ref.	R.O. OEM
REC806673T1	806673T1 806673T

MOTORES / ENGINES / MOTORI
V8 (5.0 & 5.7L)

Ref.	R.O. OEM
REC3861267	392-881732

MOTORES / ENGINES / MOTORI
Motores 496 Magnum
8.1 Inboard

Ref.	R.O. OEM
REC3861985	392-863704T 8M0054588

NEW

MOTORES / ENGINES / MOTORI
2001+
4.3, 5.0, 5.7 & 6.2L EMC
0M300000+

MODULOS IGNICIÓN
IGNITION MODULES
MODULI AVVIAMENTO

Ref.	R.O. OEM
RM805361T3	805361T3

MOTORES / ENGINES / MOTORI
5.0/5.7 L (1987-95)

Ref.	R.O. OEM
RM15247A1	15247A1 15247T02

MOTORES / ENGINES / MOTORI
4.3 L (1987-93)

Ref.	R.O. OEM
RM15248A1	15248A1 15248T02

MOTORES / ENGINES / MOTORI
7.4/8.2 L (1981-96)

Ref.	R.O. OEM
RM805361T2	805361T2

MOTORES / ENGINES / MOTORI
7.4 L (1992-96)

Ref.	R.O. OEM
RM805361T6	805361T6

MOTORES / ENGINES / MOTORI
5.0/5.7/7.4 L (1987-96)

Ref.	R.O. OEM
RM821125A1	821125A1 821125T02

MOTORES / ENGINES / MOTORI
5.0/5.7 L (1987-96)

Ref.	R.O. OEM
REC3854001	811639T

MOTORES / ENG
V4, V6, V8
Delco Voyager

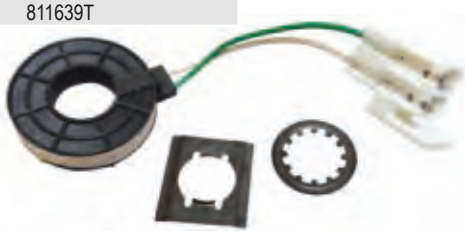

Ref.	R.O. OEM
RM15899A1	15899A1 15899T02

MOTORES / ENGINES / MOTORI
5.0/5.7 L (1987-95)

Ref.	R.O. OEM
REC3854003	811637T 811637001 81637002 811637 850487 804412 802464

MOTORES / ENGINES / MOTORI
4L, V6 & V8 Delco Voyager

Ref.	R.O. OEM
REC3858984	GM10482803

NEW

MOTORES / ENGINES / MOTORI
4.3, 5.0, 5.7 & 6.2L MPI ECM555
(2001+)
0M300000+
Para bobina / for coil / per bobina:
REC3861985

BUJÍAS
SPARK
CANDELE

CHAMPION

Modelo Model Modello	CYL/ CID	SERIE SERIAL SERIE	Ref. CHAMPION
110	4, 153 CID		CHARN5C
110	4, 153 CID		CHARV15YC4
140	4, 181 CID	-3826282	CHARN5C
140	4, 181 CID	3826283	CHARV15YC4
3.0	4, 181 CID	-0F353100	CHARV15YC4
3.0	4, 181CID	0L010042+	CHARS12YC
3.0 LX	4, 181 CID		CHARS12YC
470, 165, 170, 485, 488, 180, 190,	4, 224 CID		CHARS12YC
3.7L, 3.7LX,	4, 224 CID		CHARS12YC
140, 150, 160,	4, 224 CID		CHARS12YC
165	6, 194, 230 & 292 CID	- 2771483	CHARN5C
165	6, 194, 230 & 292 CID	2771484	CHARV15YC4
200	6, 194, 230 & 292 CID		CHARN5C
185	V6, 229 CID		CHARV15YC4
175, 185, 205	V6, 262 CID		CHARV15YC4
262 MAG EFI GEN+	V6, 262 CID	0F80800-0L000000	CHARS12YC
4.3L MPI	V6, 262 CID		CHARV15YC4
4.3L	V6, 262 CID	-0F802999	CHARV15YC4
4.3LX	V6, 262 CID	0F802999+	CHARV15YC4
4.3 GEN+	V6, 262 CID	0L010065+	CHARS12YC
4.3LL EFI GEN+	V6, 262 CID	0L012009+	CHARS12YC

Modelo Model Modello	CYL/ CID	SERIE SERIAL SERIE	Ref. CHAMPION
4.3LH GEN+	V6, 262 CID	0L010044+	CHARS12YC
4.3LX GEN+	V6, 262 CID	0F803000-0L000000	CHARS12YC
4.3LXH GEN+	V6, 262 CID	0F803000-0L000000	CHARS12YC
888 Culata / Head / Testata 14mm FORD V8	CHARV15YC4	4169597	CHARV15YC4
233 Culata / Head / Testata 14mm	FORD V8		CHARV15YC4
255 Culata / Head / Testata 14mm FORD V8	CHARV15YC4	4175499	CHARV15YC4
190	V8 283, 327, 305, 350 CID		CHARJ12YC
898, 200	V8 283, 327, 305, 350 CID		CHARV9IMC
225	V8 283, 327, 305, 350 CID	2278647	CHARJ12YC
228, 230	V8 283, 327, 305, 350 CID		CHARV9IMC
250	V8 283, 327, 305, 350 CID	4768000	CHARV15YC4
255	V8 283, 327, 305, 350 CID		CHARV15YC4

Modelo Model Modello	CYL/ CID	SERIE SERIAL SERIE	Ref. CHAMPION
260	V8 283, 327, 305, 350 CID		CHARV9IMC
280, 300 Tempest, 320 EFI	V8 283, 327, 305, 350 CID		CHARV15YC4
350 Mag (Carb)	V8 283, 327, 305, 350 CID		CHARV9IMC
350 Mag EFI/MP	V8 283, 327, 305, 350 CID	-0F602199	CHARV9IMC
350 Mag EFI GEN+ V8	CHARS12YC	0F800500+	CHARS12YC
350 Mag MPI GEN+ V8	CHARS12YC	0F602000+	CHARS12YC
350 Mag MPI GEN+ V8	CHARS12PYP	0L604000+	CHARS12PYP
377 Scorpion	V8 283, 327, 305, 350 CID	0L416146+	CHARS12YC
5.0L MPI	V8 283, 327, 305, 350 CID		CHARS12YC
5.0L	V8 283, 327, 305, 350 CID	- 0L000000	CHARV9IMC
5.0L GEN+	V8 283, 327, 305, 350 CID	0L015751	CHARS12YC
5.0L EFI GEN+	V8 283, 327, 305, 350 CID	0L012052	CHARS12YC
5.0LX	V8 283, 327, 305, 350 CID		CHARV9IMC
5.7L	V8 283, 327, 305, 350 CID	-0L000000	CHARV9IMC
5.7L EFI	V8 283, 327, 305, 350 CID	-0L000000	CHARV9IMC
5.7L GEN+	V8 283, 327, 305, 350 CID	0L010037+	CHARS12YC
5.7L EFI GEN+	V8 283, 327, 305, 350 CID	0L010035+	CHARS12YC
5.7LX, 5.7LX EFI	V8 283, 327, 305, 350 CID		CHARV9IMC
5.7LX EFI GEN+	V8 283, 327, 305, 350 CID		CHARS12YC
325	V8 427, 454 & 482 CID	3043030	CHAV63C
330, 330 (B-W), 370, 400, 400 Cyclone	V8 427, 454 & 482 CID		CHARV15YC4
420, HP425, 440 Cyclone, HP450	V8 427, 454 & 482 CID		CHARV15YC4
454 Mag Alpha, Bravo, EFI/MP/MPI	V8 427, 454 & 482 CID		CHARV15YC4
460 Cyclone, 475 Turbo, HP525 SC	V8 427, 454 & 482 CID		CHAV63C
7.4L Alpha, 7.4L Bravo	V8 427, 454 & 482 CID		CHARV15YC4
7.4L TR	V8 427, 454 & 482 CID	OB771113-OC407646	CHARV15YC4
7.4L MPI (L29)	V8 427, 454 & 482 CID	0L010003+	CHARS12YC
7.4LX EFI, 7.4LX MPI	V8 427, 454 & 482 CID		CHARV15YC4
HP465, HP500 (502 CID), HP500 EFI	V8 502, 540 & 572 CID		CHARV15YC4
HP500 Bulldog 540, HP525 SC 454	V8 502, 540 & 572 CID		CHAV63C
HP575, HP600SC Bobtail (502 CID)	V8 502, 540 & 572 CID		CHAV63C
HP800SC (572 CID)	V8 502, 540 & 572 CID		CHAV63C
502 MAG (CARB.), EFI/ MA/MPI	V8 502, 540 & 572 CID		CHARV15YC4
600SC, 800SC	V8 502, 540 & 572 CID		CHAV63C

BUJÍAS SPARK CANDELE

Modelo Model Modello	CYL	SERIE SERIAL SERIE	Ref. STANDARD	Ref. IRIDIUM
110	4		NGKBR6ES	
120	4	-3825578	NGKBR6ES	
140	4	-3825578	NGKBR6ES	
2.5L 153, CID	4		NGKBR6EF	
3.0L 181 CID	4	OL010042+	NGKBPR6EFS	NGKTR6IX
3.0L 181 CID	4	-OF3353100	NGKBR6ES	
3.0LX	4		NGKBPR6EFS	NGKTR6IX
165 224 CID, 170 224 CID	4		NGKBR6FS	
180 224CID, 190 224 CID	4		NGKBR6FS	
3.7L 224 CID, 3,7LX 224 CID	4		NGKBR6FS	

Modelo Model Modello	CYL	SERIE SERIAL SERIE	Ref. STANDARD	Ref. IRIDIUM
470 224CID, 485 224CID, 488 224CID	4		NGKBR6FS	
140, 150, 160	6		NGKBR6ES	
165	6	-2771483	NGKBR6ES	
200, 175, 185, 205, 185 229 CID	6		NGKBR6FS	
262 MAG EFI GEN+	6	OF803800-OL00000	NGKBPR6EFS	NGKTR6IX
4.3L	6	-OF802999	NGKBR6ES	
4.3L EFI GEN+	6	OL012009+	NGKBPR6EFS	NGKTR6IX
4.3L GEN+	6	OL010065+	NGKBPR6EFS	NGKTR6IX
4.3LH EFI GEN+	6	OL010044+	NGKBPR6EFS	NGKTR6IX
4.3L mpi gen +	6	OM322781+	NGKTR55	NGKTR55IX
4.3LX	6	-OF802999	NGKBR6ES	
4.3LX GEN+	6	OF803000 - OL00000	NGKBPR6EFS	NGKTR6IX
4.3LXH GEN+	6	OF803000 - OL00000	NGKBPR6EFS	NGKTR6IX
4.5 MPI	6		NGKBPR5EFS-13	
250	8	4768000 +	NGKBR6FS	NGKBR6FIX
255 - 260	8		NGKBR6FS	NGKBR6FIX
280, 300 Tempest, 320 EFI, 350 MAG	8		NGKBR6FS	NGKBR6FIX
5.0L	8	-OL00000	NGKTR5	NGKYR5IX
5.0L EFI GEN+	8	OL015751+	NGKBPR6EFS	NGKTR6IX
5.0L MPI GEN+	8	OM320415+	NGKTR55	NGKTR55IX
5.0L MPI Alpha/Bravo	8			NGKITR4A15
5.0LX	8		NGKYR5	NGKYR5IX
5.0L MPI 2002+	8		NGKBPR6EFS	NGKTR6IX
5.7l, 5.7LEFI	8	-OL000000	NGKBR6FS	NGKBR6FIX
5,7L EFI GEN+	8	OL010035+	NGKBPR6EFS	NGKTR6IX
5.7L GEN+	8	OL010037+	NGKBPR6EFS	NGKTR6IX
5.7LX, 5.7LX EFI	8		NGKBR6FS	NGKBR6FIX
5.7LX EFI GEN+	8		NGKBPR6EFS	NGKTR6IX
5.7 MPI Horizon MIE	8			NGKITR4A15
5.7 MPI MIE	8			NGKITR4A15
5.7 Black Scorpion	8	OM391852 +	NGKTR55	NGKTR55IX
5.7 Black Scorpion	8	OM391778 +	NGKTR55	NGKTR55IX
350 MAG EFI GEN+	8	OF800500 +	NGKBPR6EFS	NGKTR6IX
350 MAG EFI/MP	8	OF602199 +	NGKBR6FS	NGKBR6FIX
350 MAG MPI GEN+	8	OF602000 - OM320489	NGKBR6FS	NGKTR6IX
350 MAG MPI GEN+	8	OM320590+	NGKTR55	NGKTR55IX
350 MAG MPI GEN+ Horizon	8	OL304700- OM309999	NGKTR5	NGKTR55IX
350 MAG MPI Alpha/ Bravo	8			NGKITR4A15
350 MAG MPI Horizon Alpha/Bravo	8			NGKITR4A15
377Magnum MPI Bravo	8			NGKITR4A15
898, 200	8		NGKYR5	NGKYR5IX
6.2 MPI MIE	8			NGKITR4A15
6.2 MPI Horizon MIE	8			NGKITR4A15
MX6.2 MPI	8	-OM320613	NGKBPR6EFS	NGKTR6IX
MX6.2L MPI	8	OM320614+	NGKTR55	NGKTR55IX
MX6.2 MPI Horizon	8	OM320614+	NGKTR55	NGKTR55IX
Scorpiòn	8	OL416146+	NGKBPR6EFS	NGKTR6IX
233	8		NGKBPR6EFS	NGKTR6IX
255	8	-4175498	NGKBR6FS	NGKBR6FIX
255	8	4175499+	NGKBPR6EFS	NGKTR6IX
888	8	4169597+	NGKBPR6EFS	NGKTR6IX
330	8		NGKBR6ES	
390	8		NGKBR6ES	
420, 440 Ciclone, 454MAG ALPHA	8		NGKBR6FS	NGKBR6FIX
454 Magnum Bravo, 454 MAF EFI-MPI	8		NGKBR6FS	NGKBR6FIX
502 MAG, 502 MAG EFI-MP, MPI	8		NGKBR6FS	NGKBR6FIX
7.4L ALPHA, 7.4L Bravo	8		NGKBR6FS	NGKBR6FIX
7.4L MPI (L29)	8		NGKBPR6EFS	NGKBR6FIX
7.4LX EFI Bravo, MPI Bravo	8		NGKBR6FS	NGKBR6FIX
7.4TR	8	OB771113 - OC407646	NGKBR6FS	NGKBR6FIX
HP425, HP450, HP465, HP500, 502CID	8		NGKBR6FS	NGKBR6FIX
8.1L, 8.1 SHO, 8.1 S Horizon (2000-06)	8		NGKTR55	NGKTR55IX
8.1 SHO, 8.1 S Horizon (2007 +)	8			NGKIZFR7M

JUEGOS DE CABLE PARA BUJÍAS DE ALTO RENDIMIENTO
HD SPARK PLUG WIRE SET
KIT CAVI CANDELE ALTE PRESTAZIONI

- Núcleo del cable de Kevlar de 8 mm antimagnético
- Funda de silicona amarilla
- Terminales bujías con muelle de acero inox
- Terminal del Distribuidor de Cobre
- Terminales Bobina
- Silicona resistente a altas temperaturas
- Garantía de 5 años

- Antimagnetic Kevlar core
- Yellow silicone boot & jacket
- SS snaplock
- Brass distributor terminal
- Coil terminals
- High resistant silicone
- 5 year warranty

- Nucleo del cavi in Kevlar da 8 mm antimagnetico
- Fodera in silicone gialla
- Terminali candele con mole di acciaio inox.
- Terminale lato spinteorgeno in rame
- Terminali Bobina
- Silicone resistente alle alte temperature
- Garanzia 5 anni

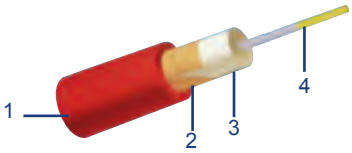

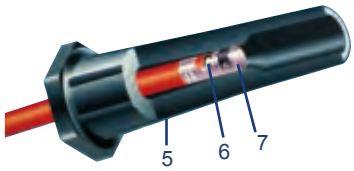

Nº			
1	Camisa de silicona de 8 mm	8 mm silicone jacket	Guaina in silicone da 8 mm
2	Látex resistente altas temperaturas	Heat resistant latex	Latex resistente alle alte temperature
3	Acero inox	Stainless Steel	Acciaio inox
4	Núcleo de Kevlar	Kevlar core	Nucleo in Kvlar
5	Capuchón de silicona	Silicone jacket	Cappucio in silicone
6	Trenzado fibra	Fiberglass braiding	Fibra di vetro
7	Terminal de acero inox	Stainless Steel terminal	Terminale in acciaio inox

Ref	R.O. OEM	MODELO MODEL MODELLO	ARRANQUE IGNITION AVVIAMENTO CONVENCIONAL CONVENTIONAL CONVENZIONALE	ELECTRÓNICO ELECTRONIC ELETTRONICO	CYL
REC15-401	84-813720A5	110/120/2.5L 140/3.0L	✓		4
REC15-405	84-813720A13	120/2.5L 140/3.0L 3.0LX		✓	4
MAG15-602	84-813720A8 84-816761Q8	140-185(EN LINEA 6)	✓		6
REC15-402	84-813720A5	165-180 LX/470- 485 190 (3.7L)	✓		4
REC15-601	84-813720A11	175/185 (228, 262) 4.3L (GENI)		✓	6
REC15-604	84-813720A7 84-816761Q7	185 (229)	✓		6
REC15-801	84-813720A8 84-813720A10	180 (GM)	✓		8
REC15-804	84-813720A4 84-818781A4 84-8167681A17 84-813720A3	200/5.0L (GM)		✓	8
REC15-606		4.3L 2002 + MPI		✓	6
REC15-801	84-813720A8 84-813720A10	215-225S 223FORD 22S-228GM	✓		8
REC15-804	84-813720A4 84-816761A4 84-816878A17 84-813720A3	228-230/5.0L LX (GM)		✓	8
REC15-801	84-813720A8 84-813720A10	255 (FORD) 250-225-225-280(GM)	✓		8
REC15-815	84-816608A1	5.0L GENE+ 2002+ MPI		✓	8
REC15-804	84-813720A2 84-816781A4 84-816761A17 84-813720A3	350 (5.7L) MAG., SKI		✓	8
REC15-815	84-816608A1	5.7L GENE+ 2002+ MPI		✓	8
REC15-801	84-813720A8 84-813720A10	270/280/350 (GM)	✓		8
REC15-804	84-816761A2 84-816781A15 84-816761A6 84-816761A15	300MR/TRS (GM)		✓	8
REC15-804	84-813720A4 84-816781A4 84-816761A17 84-813720A3	260/320/325 /330/340 (GM)		✓	8
REC15-801	84-813720A8 84-813720A10	370/380/400/ 440/460 TRS	✓		8
REC15-804	84-816761A2 84-816781A15 84-816761A8 84-816761A15	420/425/486 /525/575		✓	8

Ref	R.O. OEM	MODELO MODEL MODELLO	ARRANQUE IGNITION AVVIAMENTO CONVENCIONAL CONVENTIONAL CONVENZIONALE	ELECTRÓNICO ELECTRONIC ELETTRONICO	CYL
REC15-804	84-816761A2 84-816781A15 84-816761A8 84-816761A15	454/500/502 MAG BRAVO		✓	8
REC15-801	84-813720A8 84-813720A10	888 (FORD) 898,198 (GM)	✓		8
REC15-804	84-816761A2 84-816781A15 84-816761A8 84-816761A15	888 (GM) 5.7 BRAVO		✓	8
REC15-801	84-813720A9 84-813720A10	5.7 SKI	✓		8
REC15-804	84-816761A2 84-816781A15 84-816761A8 84-816761A15	7.4L BRAVO		✓	8
REC15-804	84-816761A2 84-816781A15 84-816761A8 84-816761A15	7.4L 8.2L CON HURTH		✓	8
REC15-804	84-816761A2 84-816781A15 84-816761A6 84-816761A15	300 MR/TRS (GM)		✓	8
REC15-804	84-816761A2 84-816781A15 84-816761A6 84-816761A15	330-340 (GM)		✓	8
REC15-804	84-816761A2 84-816781A15 84-816761A6 84-816761A15	454 MAG BRAVO 420/425/465 /525/575		✓	8
REC15-804	84-816761A2 84-816781A15 84-816761A6 84-816761A15	898 (GM) 5.7 BRAVO		✓	8
REC15-804	84-816761A2 84-816781A15 84-816761A6 84-816761A15	500/502 BRAVO		✓	8
MAG15-803	84-816761A2 84-816781A15 84-816761A6 84-816761A15	500/502 BRAVO		✓	8
REC15-804	84-816761A2 84-816781A15 84-816761A6 84-816761A15	7.4L BRAVO 7.4L-8.2L CON HURTH		✓	8
REC15-804	84-816761A2 84-816781A15 84-816761A6 84-816761A15	7.4L BRAVO 7.4L-8.2L CON HURTH		✓	8
REC15-813	84-863656A1	6.2L MPI MIE		✓	8
MAG15-809		454 MAGNUM		✓	
REC15-808		8.1L 496		✓	

GUIA CORREAS MOTOR
V-BELTS GUIDE
GUIDA CINGHIA MOTORE

Ref.	R.O. OEM
REC57-13457Q	57-13457Q
REC966931	57-13458Q
REC3852106	57-32850 57-69143Q
REC57-34359	57-34359 57-37619T, Q
REC57-36356	57-36356
REC3858462	57-45856 57-49213A1 57-93658Q
REC829207	57-48120Q1
REC57-48122Q	57-48122Q

Ref.	R.O. OEM
REC57-49043A1	57-49043A1 57-64032Q1
REC57-64416	57-49211 57-64416
REC57-52692	57-52692
REC57-65607Q	57-65607T
REC966903	57-74271Q
REC966900	57-77274
REC57-78200Q1	57-78200Q1
REC57-816295Q	57-816295Q
REC57-91035Q1	57-91035Q1

Modelo Model Modello	Año Year Anno	SERIE SERIAL SERIE	ALTERNADOR BOMBA AGUA WATER PUMP ALTERNATOR ALTERNATORE POMPA ACQUA	DIRECCIÓN POWER STEERING IDROGUIDA	POMPA AGUA SALADA SEA WATER PUMP POMPA ACQUA SALATA
CMD 1.7MS 120 I/L4		8810800+		RM57-862054Q	
CMD 1.7MI 120 L/L4		88109041+		RM57-862054Q	
110	63-66	1537370 - 2044033	REC57-49043A1		
120	64-73	1666601-3770649	REC57-49043A1		
120	74-82	3770650-6229717	REC57-49043A1	REC57-65607Q (37")	
120	74-82	3770650-6229717	REC57-49043A1	REC3852106 (40")	
120(2.5L)	82-89	6229718 - C853255	REC57-49043A1		
120(2.5L)	82-89	6229718 - C853255 W/P/S	REC3852106	REC57-65607Q	
140	68-73	2508261-3770649	REC57-49043A1		
140	74-82	3770650-6229717	REC57-49043A1	REC57-65607Q (37")	
140	74-82	3770650-6229717	REC57-49043A1	REC3852106 (40")	
140/3.0L/3.0LX	1982	6229718 +	REC57-49043A1		
140/3.0L/3.0LX	1982	6229718+ W/PS	REC3852106	REC57-65607Q	
150	64-66	1666495-2048646	REC57-49043A1		
160	67-69	2048022-2770031	REC57-49043A1		
165	70-73	2770032 - 3774864	REC57-49043A1		
165	74-81	3774865 - 5813433	REC57-49043A1	REC57-65607Q (37")	
165	74-81	3774865 - 5813433	REC57-49043A1	REC3852106 (40")	
165/170/180/190/3.7L	85-89	6916779 - C762299		REC57-49043A1	
470 (170HP)	76-82	4208730 - 6218036			
470 (170HP)	83-84	6218037 - 6916778		REC57-49043A1	
488	83-84	6170297 - 6916778		REC57-49043A1	
175	1987	OB527955-OB773242		REC57-816295Q	
175/185/4.3L	85-92	A331455 - D714106	REC3858462	REC57-34359	REC966903
3.0L GM 181 I/L4		OW302000+		RM57-862054Q	
3.0 MPI EC		1A072812+		RM57-862054Q	
3.0 TKS Pus		1G404114+		RM57-862054Q	
4.3L	92-96	D714107 - F802999	REC829207		REC57-13457Q
4.3L (2bbl)	88-32	OB773243-OD714106		REC57-816295Q	
4.3L (GenII) (2 bbl)	92-96	OD714107-OF802999		REC57-816295Q	
4.3LX (4bbl)	88-92	OB775130-OD714369		REC57-816295Q	
4.3LX (Gen II)	92-96	OD714370-OF802999		REC57-816295Q	
888	71-77	3108723 - 4887829	REC3858462		
888	71-77	3108723 - 4887829	REC3858462	REC57-13457Q (30")	REC3858462
898 W/O HIGH MT P/S	77-84	4762210 - 6218461	REC829207	REC966900	REC966903
898 W/ HIGH MT P/S	77-84	4762210 - 6218461	REC3858462	REC57-91035Q1	REC966903
898/200/5.0L	85-95	6218462 - F600999	REC3858462	REC57-91035Q1	REC966903
898/200/5.0L	85-95	6218462 - F600999	REC829207	REC57-34359	REC57-13457Q
200	1969	2453769 - 2712072	REC57-49043A1		
205	85-91	A331455 - D714369	REC3858462	REC57-34359	REC966903
215	70-72	2781153 - 3563181	REC3858462		
215 MIE	70-72	2781153 - 3563181	REC3858462		
225	73-74	3385721 - 4166999	REC3858462	REC57-34359	REC966903
225 MIE	73-74	3385721 - 4166999	REC3858462		
225 MCM/MIE	67-69	2278647 - 2694014	REC829207		
228 W/O HIGH MT P/S	77-82	4765100-6218461	REC829207	REC966900	REC966903
228 W/ HIGH MT P/S	77-82	4765100-6218461	REC3858462	REC57-91035Q1	REC966903
228/230/5.0L	83-95	6218462 - F600999	REC3858462	REC57-91035Q1	REC966903
228/230/5.0L	83-95	6218462 - F600999	REC829207	REC57-34359	REC57-13457Q
228 MIE	1977	4765100 - 4929030	REC829207		REC966900

Modelo Model Modello	Año Year Anno	SERIE SERIAL SERIE	ALTERNADOR BOMBA AGUA WATER PUMP ALTERNATOR ALTERNATORE POMPA ACQUA	DIRECCIÓN POWER STEERING IDROGUIDA	POMPA AGUA SALADA SEA WATER PUMP POMPA ACQUA SALATA
228/230/5.0L MIE	78-87	4929030 - B788151	REC3858462	REC57-91035Q1	REC966903
228/230/5.0L MIE	78-87	4929030 - B788151	REC829207	REC57-34359	REC57-13457Q
233	75-77	4173000 - 4902304	REC3858462		
233	75-77	4173000 - 4902304	REC3858462	REC57-13457Q	REC966903
233 MIE	75-76	4173000 - 4775784	REC3858462		
250	68-69	2314301 - 2639854	REC829207		
250	1977	4768000 - 4908849	REC3858462	REC966903	REC966903
255 MCM/MIE	73-74	3258728 - 4175499	REC3858462		
255	75-76	4175500 - 4498700	REC829207		
255	1976	4498701-4499060	REC829207		
255	1976	4499061-4767999	REC829207		
255 MIE	75-77	4175500 - 4498700	REC829207		
255 MIE	77-78	4498701 - 4924564	REC829207		REC966903
255/260/5.7L MIE & Ski	78-86	4924565 - B522505	REC3858462		REC966903
260/5.7L MIE & Ski	87-93	B522506 - F024999	REC3858462		REC966903
260/5.7L MIE & Ski	87-93	B522506 - F024999	REC829207		REC57-13457Q
5.7L MIE & Ski	94-96	F025000 - K040306	REC829207		REC57-13457Q
260 W/HM P/S	78-82	4908850 - 6218461	REC3858462	REC57-91035Q1	REC966903
260 W/LM P/S	1978-82	4908850 - 6218461	REC829207		REC966903
260/5.7L	1983-95	6218462 - F600999	REC3858462	REC57-91035Q1	REC966903
260/5.7L	1983-95	6218462 - F600999	REC829207	REC57-34359	REC57-13457Q
5.7L/5.7LX	1996	F601000 - K001526	REC829207	REC57-816295Q	REC57-13457Q
350 MAG	1986-95	A635178 - F600999	REC3858462	REC57-34359	REC966903
350 MAG	1986-95	A635178 - F600999	REC829207		REC57-13457Q
350 MAG	1996	F601000 - K001500	REC829207		REC57-13457Q
350 MAG Ski	1991-96	D505450 - K040005	REC829207		REC57-13457Q
Black Scorpion Ski	1996	F800000 - K040000	REC829207		REC57-13457Q
270 MCM/MIE	1969-72	2851074 - 3385720	REC829207		
280	1975	4176250 - 4176468	REC829207		
280	1975-76	4176469 - 4499390	REC829207		
280	1976	4499391 - 4499780	REC829207		
280	1976	4499781 - 4770199	REC829207		
5.7L	1988-96	OB525982-OF600999		REC57-816295Q	
5.7LEFI (2bbl)	1996	OF752400-OK001505		REC57-816295Q	
5.7L Alpha EFI (TBI)	1995	OF355305-OF752389		REC57-816295Q	
5.7L Bravo EFI (TBI)	1995	OF225560-OF752399		REC57-816295Q	
5.7LX Bravo EFI (Gen+)	1996	OF800300-OK001508		REC57-816295Q	
5.7LX EFI (4bbl TBI)	1996	OF752400-OK001505		REC57-816295Q	
320(EFI)	1987-89	A543604 - C622418	REC3858462	REC57-34359	
325 MCM/MIE	1968-74	2278747 - 3780449	REC57-48122Q		
330	1977-81	4623115-6083144	REC57-78200Q1		REC966903
330	1982-87	6083144 - B816540	REC57-78200Q1	REC57-96834Q (50”)	REC966903
330	1982-87	6083144 - B816540	REC57-78200Q1	REC966931 (55”)	REC57-13457Q
340 (7.4L)	1981-92	5889914 - D715493	REC57-78200Q1		REC966903
340 (7.4L)	1981-92	5889914 - D715493	REC57-78200Q1		REC57-13457Q
350 MIE	1974-75	3780450-4501640	REC57-48122Q		
350 MIE	1976	4501641 - 4623109	REC57-48122Q		REC966903
350 Mag Alpha	1987-95	OB525982-OF600999		REC57-816295Q	
350Mag Alpha (4bbl)	1996	OF601000-OK001526		REC57-816295Q	
350Mag Alpha EFI (Gen+)	1996	OF800300-OK001508		REC57-816295Q	
350Mag Bravo MPI	1995	OF415189-OF601999		REC57-816295Q	
350Mag Bravo MPI (Gen+)	1996	OF602000-OK001500		REC57-816295Q	
7.4L BRAVO	1988-91	B771113 - D603117	REC57-78200Q1	REC966931	REC57-13457Q
7.4L BRAVO	1988-91	B771113 - D603117	REC57-48122Q		REC57-13457Q
7.4L/LX BRAVO	1992-97	D603118 - K999999	REC57-48122Q		REC3852106
7.4LX Bravo (TBI)	1996-97	F820000 - K999999	REC57-48122Q		REC57-13457Q
7.4LX Bravo (MPI)	1996-97	F602010 - K147349	REC57-48122Q		REC3852106
7.4LX Bravo (MPI)	1997	K147350 - K999999	REC57-48122Q		REC57-13457Q
7.4L MIE	1989-92	C391564 - D715493	REC57-78200Q1		REC57-13457Q
7.4L MIE	1989-92	C391564 - D715493	REC57-48122Q		REC57-13457Q
7.4L MIE	1992-97	C391564 - K999999	REC57-48122Q		REC3852106
454 MAG Alpha	1986-88	A631894 +	REC57-78200Q1	REC57-96834Q (50”)	
454 MAG Alpha	1986-88	A631894+	REC57-78200Q1	REC966931 (55”)	
454 MAG	1988-92	B721206 - D805068	REC57-78200Q1	REC966931	REC57-13457Q
454 MAG	1988-92	B721206 - D805068	REC57-48122Q		REC57-13457Q
454 MAG	1992-97	D805069 - K999999	REC57-48122Q		REC3852106
454 MAG (MPI)	1994-97	F115700 - K147349	REC57-48122Q		REC3852106
454 MAG (MPI)	1997	K147350 - K999999	REC57-48122Q		REC57-13457Q

Modelo Model Modello	Año Year Anno	SERIE SERIAL SERIE	ALTERNADOR BOMBA AGUA WATER PUMP ALTERNATOR ALTERNATORE POMPA ACQUA	DIRECCIÓN POWER STEERING IDROGUIDA	POMPA AGUA SALADA SEA WATER PUMP POMPA ACQUA SALATA
454 MAG Ski	1995-97	F215800 - K999999	**REC57-48122Q**		**REC3852106**
370(TRS)	1978-85	4179554 - 6721527	**REC57-48122Q**		
370(TRS)	1985-87	6721528 - B714586	**REC57-48122Q**	**REC57-96834Q**	
390 MCM/MIE	1969-70	2781129 - 3042731	**REC57-48122Q**		
400 (TRS)	1980-86	4179554 - B457644	**REC57-48122Q**		
420/425	1987-92	A398941 - D725499	**REC57-48122Q**	**REC57-96834Q**	
420/425	1992	D725500 - D937011	**REC57-48122Q**		**REC3852106**
440 (TRS)	1983-86	4179554 - B485220	**REC57-48122Q**		
450	1995-96	F347100 - F347227	**REC57-48122Q**		**REC3852106**
460 (TRS)	1983-86	4179554 - 6181046	**REC57-48122Q**		
502 MAG	1990-97	C878221 - D824588	**REC57-48122Q**		**REC57-13457Q**
502 MAG	1990-97	C824589 - K999999	**REC57-48122Q**		**REC3852106**
502 MAG (MPI)	1994-97	D840650 - K147349	**REC57-48122Q**		**REC3852106**
502 MAG (MPI)	1997	K147350 - K999999	**REC57-48122Q**		**REC57-13457Q**
8.2L MIE	1990-93	C878221 - D857199	**REC57-48122Q**		**REC57-13457Q**
8.2L MIE	1993-97	D857200 - K999999	**REC57-48122Q**		**REC3852106**
8.2L MPI MIE	1996-97	F819620 - K147349	**REC57-48122Q**		**REC3852106**
8.2L MPI MIE	1997	K147350 - K999999	**REC57-48122Q**		**REC57-13457Q**

GUÍA CORREAS SERPENTÍN MOTOR
SEPENTINE BELTS GUIDE
GUIDA CINGHIA A SERPENTINA MOTORE

REF	R.O. OEM	LARGO LENGHT LUNGHEZZA
REC57-865615Q03	57-865615Q03	270,4 cm
REC57-865615Q04	57-865615Q04	194,1 cm
REC57-865615Q06	57-865615Q06	266,7 cm
REC57-865615Q07	57-865615Q07	246,2 cm
REC57-865615Q08	57-865615Q08	253,5 cm
REC57-865615Q09	57-865615Q09	178,0 cm
REC57-807755Q04	57-807755Q04	224,0 cm
REC57-807755Q05	57-807755Q05	193,0 cm
REC57-861049Q	57-861049Q	264,9 cm
REC57-861757Q	57-861757Q	247,1 cm
REC57-861758Q	57-861758Q	219,7 cm
REC57-861759Q	57-861759Q	235,2 cm
REC57-865615Q01	57-865615Q01	283,0 cm
REC57-865615Q02	57-865615Q02	228,5 cm
REC57-865615Q05	57-865615005	223,3 cm
REC57-865615Q10	57-865615010	219,5 cm
REC57-817113	57-817113	138,9 cm

ANCHO / WIDTH / LARGHEZZA: 2.06 cm

Modelo Model Modello	Año Year Anno	SERIE SERIAL SERIE	REF	NOTA FOOTNOTE NOTA
4.3L Alpha	1996-99	OF803000-OL618999	**REC57-807755Q05**	4
4.3L Alpha	1996-99	OF803000-OL618999	**REC57-861758Q**	2, 6
4.3L Alpha	1996-99	OF803000-OL618999	**REC57-861759Q**	2, 5
4.3L Alpha	2000-04	OL619000 +	**REC57-865615Q04**	3, 6, 7
4.3L Alpha	2000-04	OL619000+	**REC57-865615Q08**	4, 5, 7
4.3L Alpha	2000-04	OL619000+	**REC57-865615Q03**	3
4.3L Alpha	2000-04	OL619000+	**REC57-865615Q09**	4, 5, 7
4.3L Bravo	1996-99	OF803000-OL618999	**REC57-861049Q**	2, 5
4.3L Bravo	1996-99	OF803000-OL618999	**REC57-861757Q**	2, 6
4.3L Bravo	2000-04	OL619000+	**REC57-865615Q08**	4, 7
4.3L Bravo	2000-04	OL619000+	**REC57-865615Q03**	3
5.0L Bravo	2002-04	OM600000+	**REC57-865615Q06**	3, 5, 7
5.0L Alpha	1998-99	OL012052-OL618999	**REC57-807755Q05**	4, 6
5.0L Alpha	1998-99	OL012052-OL618999	**REC57-861049Q**	5
5.0L Alpha	1998-99	OL012052-OL618999	**REC57-861758Q**	2, 6
5.0L Alpha	2000-04	OL619000+	**REC57-865615Q06**	3, 6, 7
5.0L Alpha	2000-04	OM600000+	**REC57-865615Q06**	3, 5, 7
5.0L Alpha	2001-04	OL619000+	**REC57-865615Q08**	4, 5, 7
5.0L Alpha	2001-04	OL619000+	**REC57-865615Q03**	3
5.0L Alpha	2000-04	OL619000+	**REC57-865615Q09**	4, 6, 7
5.0L Bravo	1998-99	OL012052-OL618999	**REC57-861049Q**	2, 5
5.0L Bravo	1998-99	OL012052-OL618999	**REC57-861757Q**	2, 6

Modelo Model Modello	Año Year Anno	SERIE SERIAL SERIE	REF	NOTA FOOTNOTE NOTA
5.0L Bravo	2000-04	OL619000+	REC57-865615Q08	4, 7
5.0L Bravo	2000-04	OL619000+	REC57-865615Q03	3
350 Mag, Alpha	1997-04	OK001501-OL618999	REC57-807755Q05	4, 6
350 Mag, Alpha	1997-04	OK001501-OL618999	REC57-861049Q	2, 5
350 Mag, Alpha	1997-04	OK001501-OL618999	REC57-861758Q	2, 6
350 Mag, Alpha	2000-04	OL619000+	REC57-865615Q07	3, 6, 7
350 Mag, Alpha	2002-04	OM600000+	REC57-865615Q06	3, 5, 7
350 Mag, Alpha	2000-04	OL619000+	REC57-865615Q08	4, 5, 7
350 Mag, Alpha	2000-04	OL619000+	REC57-865615Q03	3
350 Mag, Alpha	2000-04	OL619000+	REC57-865615Q09	4, 6, 7
350 Mag, Bravo	1997-04	OK001501-OL618999	REC57-861049Q	2, 5
350 Mag, Bravo	1997-04	OK001501-OL618999	REC57-861757Q	2, 6
350 Mag, Bravo	2002-04	OM600000+	REC57-865615Q06	3, 5, 7
350 Mag, Bravo	2000-04	OL619000+	REC57-865615Q08	4, 7
350 Mag, Bravo	2000-04	OL619000+	REC57-865615Q03	3
5.7L Alpha	1997-99	OK001501-OL618999	REC57-807755Q05	4, 6
5.7L Alpha	1997-99	OK001501-OL618999	REC57-861049Q	2, 5
5.7L Alpha	1997-99	OK001501-OL618999	REC57-861758Q	2, 6
5.7L Alpha	2000-04	OL619000+	REC57-865615Q08	3, 6, 7
5.7L Alpha	2000-04	OL619000+	REC57-865615Q03	3
5.7L Alpha	2000-04	OM600000+	REC57-865615Q06	3, 5, 7
5.7L Alpha	2000-04	OL619000+	REC57-865615Q08	3, 6, 7
5.7L Alpha	2000-04	OL619000+	REC57-865615Q03	3
5.7L Alpha	2000-04	OL619000+	REC57-865615Q09	4, 6, 7
5.7L Bravo	1997-99	OK001501-OL618999	REC57-861049Q	2, 5
5.7L Bravo	1997-99	OK001501-OL618999	REC57-861757Q	2, 6
5.7L Bravo	2002-04	OM600000+	REC57-865615Q06	3, 5, 7
5.7L Bravo	2000-04	OL619000+	REC57-865615Q08	4, 7
5.7L Bravo	2000-04	OL619000+	REC57-865615Q03	3
5.7L Ski	1997-02	K040004-M316999	REC57-807755Q04	
377 Scorpion MCM	1999-04	OL416146+	REC57-861757Q	
377 Scorpion Ski	1997-98	K000656+	REC57-807755Q04	
454 Mag MPI	1998-01	OL010029-OM024999	REC57-861049Q	1
454 Mag MPI	1998-01	OL010029-OM024999	REC57-865615Q06	2
454 Mag MPI	1998-01	OL010029-OM024999	REC57-865615Q07	4
454 Mag MPI Horizon MIE	1998-01	OL002200-OL674000	REC57-865615Q07	
496 Mag & HO	2000-04	OM025000+	REC57-865615Q01	
500 EFI	1999-04	L001477+	REC57-807755Q04	
502 Mag MPI	1998-01	OL017000-OM024999	REC57-861049Q	1
502 Mag MPI	1998-01	OL017000-OM024999	REC57-865615Q07	4
502 Mag MPI	1998-01	OL017000-OM024999	REC57-865615Q06	2
525 EFI	2003-04	OM900146+	REC57-865615Q02	
525 SC	1991-96	OD456000-745215	REC57-817113	
575 SCI	2000-04	OL306696+	REC57-807755Q04	9
575 SCI	2000-04	OL306696+	REC57-817113	8
600 SC	1991-96	OD456489 - OF877462	REC57-817113	
600 SC	1998	OK000227+	REC57-817113	
7.4L MPI	1998-01	OL010003-OM024330	REC57-861049Q	1
7.4L MPI	1998-01	OL010003-OM024330	REC57-865615Q06	2
7.4L MPI	1998-01	OL010003-OM024330	REC57-865615Q07	4
7.4L MPI MIE	1998-01	OL002006-OM025999	REC57-865615Q07	
Black Scorpion Ski	1997-01	K040004-M316999	REC57-807755Q04	
MX 6.2L Blk Scorpion Ski	2001	L670015-M391599	REC57-807755Q04	
MX 6.2L MPI	2002-04	OM600000+	REC57-865615Q06	3, 5
MX 6.2L MPI	2000-04	OL680003+	REC57-865615Q08	4, 7
MX 6.2L MPI Horizon	2002-04	OM600000+	REC57-865615Q06	3
MX 6.2L MPI Horizon	2001-04	OM300000+	REC57-865615Q08	4
MX 6.2L MPI Horizon MIE	2001	M300000-M310099	REC57-807755Q04	
MX 6.2L MPI MIE	1999-01	L670000-M310099	REC57-807755Q04	
8.1S MPI MIE & HO	2000-04	OM025000+	REC57-865615Q02	
8.2L MPI MIE	1998-01	OL002450-OL674200	REC57-865615Q07	

NOTA
1 usar con polea bomba de plástico Ø 4-3/4”
2 usar con polea bomba de metal Ø 4-3/4”
3 para motores con dirección hidráulica
4 Para motores sin dirección hidráulica
5 para motores con circuito de refrigeración cerrado
6 para motores con refrigeración standard
7 Para motores con alternadores montados en alto
8 Intercambiador
9 Alternador

FOOTNOTE
1 Use w/ plastic 4-3/4” Ø p/s pump pulley
2 Use with metal 5-3/4”Ø p/s pump pulley
3 For engines with power steering
4 For engines without power steering
5 For engines with closed cooling
6 For engines with standard cooling
7 Engines with high mounted alternators
8 Blower
9 Alternator

NOTA
1 Usare con puleggia pompa in plastica Ø 4-3/4”
2 Usare con puleggia pompa in metallo Ø 4-3/4
3 Per motori con pompa idroguida
4 per motori senza pompa idroguida
5 per motori con circuito d’acqua chiuso
6 Per motori con circuito aperto
7 Per motori con alternatori montati nella parte superiore
8 Scambiatore
9 Alternatore

MANGUITOS MOTOR
HOSES
MANICOTTO MOTORE

TOMA DE AGUA
WATER SYSTEM
PRESA ACQUA

Ref.	R.O. OEM	Ø	LONGITUD LENGHT LUNGHEZZA
REC32-4172533	32-4172533 32-8M0062309	3/4"	13 7/8"
REC32-32461	32-32461 32-32461A1	5/8"	13 7/8"

Ref.	R.O. OEM
REC32-52481	32-52481

MOTORES / ENGINES / MOTORI
GM 4 & 6 CYL Inline

Ref.	R.O. OEM
REC32-43437	32-43437

MOTORES / ENGINES / MOTORI
Bravo Design I

Ref.	R.O. OEM
REC8M0062102	32-8M0062102

NEW

MOTORES / ENGINES / MOTORI
Bravo Design II

BOMBA DE AGUA
WATER PUMP
POMPA ACQUA

Ref.	R.O. OEM
RM32-805375	32-805375

Ref.	R.O. OEM
REC32-33189	32-33189

MOTORES / ENGINES / MOTORI
1 3/4" ID
12 3/4"

Ref.	R.O. OEM
REC32-897181	32-897181

BOMBA DE AGUA A ENFRIADOR DE ACEITE
MOLDED SEAWATER PUMP TO OIL COOLER
DALLA POMPA DELL' ACQUA ALLO SCAMBIATORE DELL'OLIO

Ref.	R.O. OEM
REC32-88795	32-88795

Ref.	R.O. OEM
REC32-860205	32-860205

Ref.	R.O. OEM
REC32-887952	32-887952

Ref.	R.O. OEM
REC32-8080441	32-808044-1

CULATA A COLECTOR ESCAPE
CYLINDER HEAD TO EXHAUST MANIFOLD
DALLA TESTATA AL COLLETTORE DI SCARICO

Ref.	R.O. OEM
REC32-89653	32-89653

MOTORES / ENGINES / MOTORI
1 1/4" ID
5"

CUERPO TERMOSTATO A BOMBA AGUA
DISTRIBUTION BLOCK TO WATER PUMP
CORPO TERMOSTATO ALLA POMPA DELL'ACQUA

Ref.	R.O. OEM
REC32-8M0071007	32-96879 32-47640 32-8M0071007

MOTORES / ENGINES / MOTORI
3.0L

ENFRIADOR DE ACEITE A ENFRIADOR DE ACEITE
HOSE OIL COOLER TO OIL COOLER
SCAMBIATORE DELL'OLIO A SCAMBIATORE DELL'OLIO

Ref.	R.O. OEM
REC32-8600891	32-8600891

CUERPO TERMOSTATO A COLECTOR ESTRIBOR
THERMOSTAT HOUSING TO STARBOARD EXHAUST MANIFOLD
CORPO TERMOSTATO AL COLLETTORE DESTRO

Ref.	R.O. OEM
REC32-871171	32-87117 1 32-87117

Ref.	R.O. OEM
REC32-807697	32-807697

Ref.	R.O. OEM
REC32-897301	32-897301

Ref.	R.O. OEM
REC32-8066361	32-8066361

Ref.	R.O. OEM
REC32-8066351	32-8066351

Ref.	R.O. OEM
RM32-861057	32-861057

Ref.	R.O. OEM
RM32-861058	32-861058

CUERPO TERMOSTATO A COLECTOR (DELANTERO)
THERMOSTAT TO MANIFOLD (FRONT)
CORPO TERMOSTATO AL COLLETTORE (FRONTALE)

Ref.	R.O. OEM
REC32-48132	32-48132

CUERPO TERMOSTATO A COLECTOR BABOR
THERMOSTAT HOUSING TO PORT EXHAUST MANIFOLD
CORPO TERMOSTATO AL COLLETTORE SINISTRO

Ref.	R.O. OEM
REC32-160211	32-16021 1

Ref.	R.O. OEM
REC32-33220	32-33220 32-3322070 32-8M0062614

Ref.	R.O. OEM
REC32-897491	32-89749-1

Ref.	R.O. OEM
REC32-862139	32-862139

Ref.	R.O. OEM
REC32-52481	32-52481

Ref.	R.O. OEM
REC32-862124	32-862124

Ref.	R.O. OEM
RM32-860144	32-860144

Ref.	R.O. OEM
RM32-860331	32-860331

TRANSOM A ENFRIADOR ACEITE
TRANSOM TO OIL COOLER
TRANSOM A SCAMBIATORE DELL'OLIO

Ref.	R.O. OEM
REC32-807661	32-807661

Ref.	R.O. OEM
REC32-96246A4	32-96246A4

ENFRIADOR A CUERPO TERMOSTATO
HOSE COOLER TO THERMOSTAT HOUSING
SCAMBIATORE A CORPO TERMOSTATO

Ref.	R.O. OEM
REC32-806856	32-806856

Ref.	R.O. OEM
REC32-807407	32-807407

Ref.	R.O. OEM
REC32-808033	32-808033

Ref.	R.O. OEM
RM32-806209-1	32-806209-1

Ref.	R.O. OEM
REC32-16012	32-16012

GUÍA MANGUITOS (COLA)
HOSES FUEL GUIDE (STERN DRIVES)
GUIDA MANICOTTO (PIEDE)

GAS

Modelo Model Modello	SERIE SERIAL SERIE	TERMOSTATO A BOMBA THERMOSTAT TO PUMP TERMOSTATO A POMPA	TERMOSTATO A COLECTOR ESCAPE ESTRIBOR THERMOSTAT TO MANIFOLD STB TERMOSTATO A COLLETTORE SCARICO DESTRO	TERMOSTATO A COLECTOR ESCAPE BABOR THERMOSTATTO MANIFOLD PORT TERMOSTATO A COLLETTORE SCARICO SINISTRO	TERMOSTATO A COLECTOR ESCAPE THERMOSTAT TO MANIFOLD TERMOSTATO A COLLETTORE SCARICO	TRANSOM AENFRIADOR ACEITE TRANSOM TO OIL COOLER TRANSOM A SCAMBIATORE DELL'OLIO	TERMOSTATO A ENFRIADOR ACEITE THERMOSTAT TO OIL COOLER TERMOSTATO A SCAMBIATORE DELL'OLIO	BOMBA A ENFRIADOR ACEITE WATER PUMP TO OIL COOLER POMPA A SCAMBIATORE DELL'OLIO
120	1666601-3377340	REC32-8M0071007			REC32-52481			
120	3377341-5192048	REC32-8M0071007			REC32-52481			
120	5192049-6229717	REC32-8M0071007			REC32-52481			
120/2,5L	6229718-0B531853	REC32-8M0071007			REC32-52481			
140	2508261-3332137	REC32-8M0071007			REC32-52481			
140	3332138-5157669	REC32-8M0071007			REC32-52481			
140	5157669-6229717	REC32-8M0071007			REC32-52481			
140/3.OL	6229718-0C856558	REC32-8M0071007			REC32-52481			
3.0L/LX	0C856559-0F603999	REC32-8M0071007			REC32-52481			
3.0LX	0G604000+	REC32-8M0071007			REC32-52481			
140	1538930-1725960	REC32-8M0071007			REC32-52481			
488 (4bbl)	6170297-6916778						REC32-33220	

Modelo Model Modello	SERIE SERIAL SERIE	TERMOSTATO A BOMBA THERMOSTAT TO PUMP TERMOSTATO A POMPA	TERMOSTATO A COLECTOR ESCAPE ESTRIBOR THERMOSTAT TO MANIFOLD STB TERMOSTATO A COLLETTORE SCARICO DESTRO	TERMOSTATO A COLECTOR ESCAPE BABOR THERMOSTATTO MANIFOLD PORT TERMOSTATO A COLLETTORE SCARICO SINISTRO	TERMOSTATO A COLECTOR ESCAPE THERMOSTAT TO MANIFOLD TERMOSTATO A COLLETTORE SCARICO	TRANSOM AENFRIADOR ACEITE TRANSOM TO OIL COOLER TRANSOM A SCAMBIATORE DELL'OLIO	TERMOSTATO A ENFRIADOR ACEITE THERMOSTAT TO OIL COOLER TERMOSTATO A SCAMBIATORE DELL'OLIO	BOMBA A ENFRIADOR ACEITE WATER PUMP TO OIL COOLER POMPA A SCAMBIATORE DELL'OLIO
190 (4bbl)	6916779+						REC32-33220	
180/3.7LX (4bbl)	6916779+						REC32-33220	
185 (4bbl)	6330183-6919655	REC32-33189						
165	2770032-5178958				REC32-52481			
165	5178959-5813433				REC32-52481			
185 (2bbl)	0A331455-0B527954	REC32-33189					REC32-33220	
175/4.3 (2bbl)	0B527955-0D714106	REC32-33189					REC32-33220	
4.3L (GEN II) (2bbl)	0D714107-0F00877	REC32-33189	REC32-871171	REC32-160211			REC32-806856	
4.3L (GEN II) (2bbl)	0F000878-0F601126		REC32-8066361	REC32-8066351		REC32-806856		
4.3L (GEN II) (2bbl)	0F601127-0F802999	REC32-33189	REC32-8066361	REC32-8066351		REC32-806856		REC27-68714A6
4.3LX (GEN+) (2bbl)	0F803000+	REC32-33189	REC32-807697	RM32-860144			REC32-16012	REC27-68714A6
205 (4bbl)	0A331455-0B527954	REC32-33189	REC32-871171				REC32-16012	
205/4.3LX (4bbl)	0B527955-0D714639	REC32-33189					REC32-16012	
4.3L (GEN II) (2bbl)	0D714370-0F001219	REC32-33189				REC32-807661	REC32-16012	
4.3L (GEN II) (2bbl)	0F001220-0F601126	REC32-33189	REC32-8066361	REC32-8066351	REC32-807661	REC32-16012		
4.3L (GEN II) (2bbl)	0F601127-0F802999	REC32-33189	REC32-8066361	REC32-8066351	REC32-807661	REC32-16012		
4.3LXH (GEN+) (4bbl)	0F803114+	REC32-33189	REC32-807697	RM32-860144		REC32-807661	REC32-16012	REC32-860205
200	2453769-2712072				REC32-52481			
225 (4bbl)	3385721-4166999	REC32-33189						
225-S (4bbl)	3385721-416999	REC32-33189						
200 (2bbl)	6218462-0B525981	REC32-33189	REC32-871171	REC32-160211		REC32-96246A4	REC32-806856	REC27-68714A6
200/5.0L (2bbl)	0B525982-0F600999	REC32-33189	REC32-8066361	REC32-8066351	REC32-96246A4	REC32-806856	REC32-887952	
230 (4bbl)	6218462-0B525981	REC32-33189	REC32-871171	REC32-160211		REC32-96246A4	REC32-806856	REC27-68714A6
230/5.0LX (4bbl)	0B525982-0F600999	REC32-33189	REC32-8066361	REC32-8066351	REC32-96246A4	REC32-806856	REC32-887952	
250	4768000-4908849	REC32-33189	REC32-871171					
260	6218462-0B525981	REC32-33189				REC32-96246A4	REC32-806856	REC27-68714A6
260	6218462-0B525981	REC32-33189				REC32-96246A4		
260/5.7L	0B525982-0F600999	REC32-33189	REC32-8066361	REC32-8066351	REC32-96246A4	REC32-806856	REC32-887952	
5.7 ALPHA (2bbl)	0F601000+	REC32-33189	REC32-8066361	REC32-8066351	REC32-807661	REC32-806856	REC32-887952	
5.7L ALPHA (EFI) TBI	0F355305-0F752399	REC32-33189	REC32-8066361	REC32-8066351	REC32-96246A4	REC32-806856	REC32-887952	
5.7L ALPHA (2bbl. -TBI)	0F752400+	REC32-33189	REC32-8066361	REC32-8066351	REC32-807661	REC32-806856	REC32-887952	
5.7LX ALPHA (4bbl)	0F601000+	REC32-33189	REC32-8066361	REC32-8066351		REC32-806856	REC32-887952	
5.7LX ALPHA (4bbl. -TBI)	0F752400+	REC32-33189	REC32-807697	REC32-8066351		REC32-806856	REC32-887952	
5.7L BRAVO	0B525982-0F600999							REC32-887952
5.7L BRAVO (2bbl)	0F601000+							REC32-887952
5.7L BRAVO (EFI) TBI	0F225560-0F752399		REC32-8066361	REC32-8066351		REC32-96246A4	REC32-806856	REC32-887952
5.7L BRAVO (2bbl.-TBI)	0F752400+	REC32-33189	REC32-807697	REC32-8066351				REC32-887952
5.7LX BRAVO (4bbl)	0F601000+		REC32-8066361	REC32-8066351				REC32-887952
5.7LX BRAVO (4bbl:-TBI)	0F752400+	REC32-33189	REC32-807697	REC32-8066351				REC32-887952
5.7LX BRAVO (TBI) (GEN +)	0F800300+	REC32-33189	REC32-8066351	REC32-8066351			REC32-806856	REC32-887952
350 Mag. ALPHA	0A635178-0B525981	REC32-33189	REC32-871171	REC32-160211		REC32-96246A4		REC32-887952
350 Mag. ALPHA	0B525982-0F600999	REC32-33189	REC32-8066361	REC32-8066351		REC32-96246A4	REC32-806856	REC32-887952
350 Mag. ALPHA (4bbl)	0F601000+	REC32-33189	REC32-8066361	REC32-8066351		REC32-807661	REC32-806856	REC32-887952
350 Mag. ALPHA (TBI) (Gen+)	0F800300+	REC32-33189	REC32-8066361	REC32-8066351		REC32-807661	REC32-806856	REC32-887952
350 Mag. BRAVO (MPI)	0F415189-0F601999	REC32-33189	REC32-8066361	REC32-8066351		REC32-807661	REC32-806856	REC32-887952
350 Mag BRAVO (MPI)(GEN+)	0F602000+	REC32-33189	REC32-8066361	REC32-8066351		REC32-807661	REC32-806856	REC32-887952
270	2851074-3385720							
300 TEMPEST	6668677-0B430367	REC32-33189				REC32-96246A4		
320 (EFI)	0A543604-0B157602	REC32-33189				REC32-96246A4		
320 (EFI)	0B157603-0C622418	REC32-33189				REC32-96246A4		
325	2278747-3780449				REC32-48132			
330	4623115-6083144				REC32-48132			
330	6083145-0B816540		REC32-897301	REC32-897491				
7.4L BRAVO	0B771113-0D603117		REC32-52481	REC32-897491				
7.4LX BRAVO (Gen.V)	0D603118-0F800699	REC32-897181	REC32-897301	REC32-897491				
7.4LX BRAVO (MP)	0F602010+	REC32-897181	REC32-807697	REC32-897491				
450 Mag. ALPHA	0A631894-0B785148		REC32-897301	REC32-897491		REC32-96246A4		
454 Mag. BRAVO	0B721206-0D805068		REC32-897301	REC32-897491				
454 Mag. BRAVO (Gen.V)	0D805069-0F304999	REC32-897181	REC32-807697	REC32-897491				
454 Mag. BRAVO (Gen.V)	0F305000-0F801699	REC32-897181	REC32-897301	REC32-897491				

Modelo Model Modello	SERIE SERIAL SERIE	TERMOSTATO A BOMBA THERMOSTAT TO PUMP TERMOSTATO A POMPA	TERMOSTATO A COLECTOR ESCAPE ESTRIBOR THERMOSTAT TO MANIFOLD STB TERMOSTATO A COLLETTORE SCARICO DESTRO	TERMOSTATO A COLECTOR ESCAPE BABOR THERMOSTATTO MANIFOLD PORT TERMOSTATO A COLLETTORE SCARICO SINISTRO	TERMOSTATO A COLECTOR ESCAPE THERMOSTAT TO MANIFOLD TERMOSTATO A COLLETTORE SCARICO	TRANSOM AENFRIADOR ACEITE TRANSOM TO OIL COOLER TRANSOM A SCAMBIATORE DELL'OLIO	TERMOSTATO A ENFRIADOR ACEITE THERMOSTAT TO OIL COOLER TERMOSTATO A SCAMBIATORE DELL'OLIO	BOMBA A ENFRIADOR ACEITE WATER PUMP TO OIL COOLER POMPA A SCAMBIATORE DELL'OLIO
454 EFI (Gen.V)	0F115700-0F802349	REC32-897181						
370TRS	4179554-6721527				REC32-48132			
370TRS	6721528-0B714586		REC32-807697	REC32-897491				
400TRS	4179554-0B457644				REC32-48132			
420	0A398941-0B622418	REC32-897181						
425	0A398941-0B622418	REC32-897181						
425 (Gen.V)	0A398941-0B622418	REC32-897181						
440TRS	4179554-0B485220				REC32-48132			
450 (Gen.V)	0F347100-0F615761	REC32-897181	REC32-897301	REC32-897491				
460 TRS	4179554-6181046				REC32-48132			
465	0C84992-0F213244	REC32-897181						
465 (Gen.V)	0C84992-0F213244	REC32-897181						
500 (Gen.V)	0F213293+	REC32-897181	REC32-897301	REC32-897491				
502 Mag. BRAVO	0C878221-0D824588	REC32-897181	REC32-897301	REC32-897491				
502 Mag. BRAVO (Gen.V)	0D824589-0F114528	REC32-897181	REC32-897301	REC32-897491				
502 EFI (Gen.V)	0D840650-0F802599	REC32-897181	REC32-897301	REC32-897491				

GUÍA MANGUITOS (EJE - GASOLINA)
HOSES GUIDE (SHAFT - FUEL)
GUIDA MANICOTTO (ASSE - BENZINA)

GAS

Modelo Model Modello	SERIE SERIAL SERIE	TERMOSTATO A BOMBA THERMOSTAT TO PUMP TERMOSTATO A POMPA	TERMOSTATO A COLECTOR ESCAPE ESTRIBOR THERMOSTAT TO MANIFOLD STB TERMOSTATO A COLLETTORE SCARICO DESTRO	TERMOSTATO A COLECTOR ESCAPE BABOR THERMOSTATTO MANIFOLD PORT TERMOSTATO A COLLETTORE SCARICO SINISTRO	TERMOSTATO A COLECTOR ESCAPE THERMOSTAT TO MANIFOLD TERMOSTATO A COLLETTORE SCARICO	TRANSOM AENFRIADOR ACEITE TRANSOM TO OIL COOLER TRANSOM A SCAMBIATORE DELL'OLIO	TERMOSTATO A ENFRIADOR ACEITE THERMOSTAT TO OIL COOLER TERMOSTATO A SCAMBIATORE DELL'OLIO	BOMBA A ENFRIADOR ACEITE WATER PUMP TO OIL COOLER POMPA A SCAMBIATORE DELL'OLIO
470 MIE	5520115-6218036							
215 MIE	2781153-3563181							
225 MIE	3385721-4176999							
198 MIE (2bbl.)	4762210-6218461	REC32-33189			REC32-48132			
228 MIE (4bbl.)	4765100-5170008	REC32-33189			REC32-48132			
228 MIE (4bbl.)	5170009-5907057	REC32-33189						
230 MIE (4bbl.)	5907058-0B522505	REC32-33189			REC32-48132		REC27-68714A6	
230/5.0L MIE (4bbl.)	0B522506-0B788151	REC32-33189			REC32-48132		REC27-68714A6	
225MIE	2278647-2694014				REC32-33189			
250 MIE	2314301-2639854	REC32-33189			REC32-33189			
255 MIE	4175500-5195908	REC32-33189			REC32-33189			
255 MIE	5195909-5907057	REC32-33189			REC32-48132			
260 MIE	5900758-0B522505	REC32-33189			REC32-48132		REC27-68714A6	
260/5.7 MIE	0B522506-0F024999	REC32-33189			REC32-48132		REC27-68714A6	
5.7L MIE	0F025000+	REC32-33189	REC32-871171		REC32-33189	REC32-806856		
5.7L MIE	0F622100-0F622150 0F746100+							
5.7L (SKI) MIE	0A338533-0B514626	REC32-33189						
5.7L (COMP. SKI)	0B514627-0F775199	REC32-33189	REC32-871171					
5.7l (COMP. SKI) (2bbl.)	0F775200+	REC32-33189	REC32-8066361	REC32-8066351		REC32-806856		
350 Mag. (SKI) CARB	0D505450+	REC32-33189	REC32-871171			REC32-806856	REC32-860205	
350 Mag. (SKI) (9EFI)TBI	0F215561+	REC32-33189	REC32-8066361	REC32-8066351		REC32-806856	REC32-860205	
350 Mag. (SKI) (9EFI)MPI	0F350583+	REC32-33189	REC32-8066361	REC32-8066351			REC32-860205	
BLACK SCORPION (GEN+)	0F800000+		REC32-807697	REC32-8066351		REC32-806856	REC32-860205	REC32-8600891
270 MIE	2851074-3077735	REC32-33189						
233 MIE	4173000-4775784							
255 MIE	3258728-4178299							
325 MIE	2278747-3780449				REC32-48132			
330 MIE	4623115-5889913				REC32-48132			
7.4L MIE w/hurth	0C391564-0D715493	REC32-897181	REC32-897301	REC32-897491				
7.4L MIE (lh) Gen.V	0D715494-0F820141	REC32-897181	REC32-897301	REC32-897491				
7.4L EFI MIE (LH) Gen.V	0F563052-0F820103	REC32-897181						
454 EFI (SKI) (Gen.V)	0F215800-0F820099							
350 MIE	3780450-4623109							
390 MIE	2781129-2820559				REC32-48132			
8.2L MIE w/hurth	0C878221-0D857199	REC32-897181	REC32-897301	REC32-897491				
8.2L MIE (Gen.V)	0D857200-0F819619	REC32-897181	REC32-897301	REC32-897491				

GUÍA MANGUITOS
HOSES GUIDE
GUIDA MANICOTTO

Modelo Model Modello	SERIE SERIAL SERIE	TERMOSTATO A BOMBA THERMOSTAT TO PUMP TERMOSTATO A POMPA
530D-TA(BRAVO)	0B993002-0D725151	**RM32-805375**
D183 Turbo AC (BRAVO)	0B993002-0D725151	**RM32-805375**
D3.0L (BRAVO)	0D725152+	**RM32-805375**
636D-TA (BRAVO)	0B993002-0D850127	**RM32-805375**
D219 Turbo AC (BRAVO)	0B993002-0D850127	**RM32-805375**
D3.6L (BRAVO)	0D850128+	**RM32-805375**
D254 Turbo AC (BRAVO)	0C849461-0D554731	
D4.2L (BRAVO)	0D554732+	**RM32-805375**
7.3L (BRAVO)	0F060048+	
530D-TA	0B993002-0D725151	
D183 Turbo AC	0B993002-0D725151	
D3.0L	0D725152+	**RM32-805375**
636D-TA	0B993002-0D850127	

INTERCAMBIADORES DE CALOR
HEAT EXCHANGERS
SCAMBIATORI DI CALORE

Ref.	R.O. OEM
RM99438A1	99438A1

Para saber cual es la ref.que comprende a su motor, informar del modelo de motor y nº de serie
To know which is the model you need, please inform the model and serial number of the engine.
Per sapere il modello corretto, fornire all'assistenza clienti il numero di serie del motore.

ENFRIADOR ACEITE
OIL COOLER
REFRIGERANTE DELL'OLIO

Ref.	R.O. OEM
RM807371T1	807371T1
REC99356A2	99356A2
RM99356A1	99356A1
REC89690T	89690T

Para saber cual es la ref.que comprende a su motor, informar del modelo de motor y nº de serie
To know which is the model you need, please inform the model and serial number of the engine.
Per sapere il modello corretto, fornire all'assistenza clienti il numero di serie del motore.

KITS BOTELLAS ACEITE
RESERVOIR ASSEMBLIES KITS
KIT BOTTIGLIA OLIO

Ref.	R.O. OEM
RM806193A48	806193A48 806193A38 806193A20 19742A1 19742A3

Ref.	R.O. OEM
REC22-861150T02	22-861150T02 22-861150A1 22-861150A2

RACORD 90º PASO ACEITE
OIL RACOR 90º
RACORDO 90º PASSO OLIO

Ref.	R.O. OEM
RM22-861163	22-861163

Se instala en / It is installed in / Installato in:
REC22-861150T02

CIRCLIP
CIRCLIP
CLIP

Ref.	R.O. OEM
RM53-87843	53-87843

Se instala en / It is installed in / Installato in:
REC22-861150T02

GUÍA MANTENIMIENTO MOTORES
ENGINE MAINTENANCE GUIDE
GUIDA MANUTENZIONE MOTORI

Modelo / Model / Modello	DESCRIPCIÓN	DESCRIPTION	DESCRIZIONE	Unds. / Units / Unità	Ref.
3.0L GM181 I/L4 1987+ (0B450801+)	BUJIA (-0L096999)	SPARK PLUG (-0L96999)	CANDELE (-0L096999)	4	NGKBR6FS
	BUJIA (0L097000+)	SPARK PLUG (0L96700+)	CANDELE (0L96700+)	4	NGKBPR6EFS
	CORREA ALTERNADOR CON DIRECCIÓN HIDRÁULICA (-0L382121)	ALTERNATOR BELT WITH HYDRAULIC STEERING (-0L382121)	CINGHIA ALTERNATORE CON STERZO IDRAULICO (-0L382121)	1	REC3852106
	CORREA ALTERNADOR CON DIRECCIÓN HIDRÁULICA (0L382122+)	ALTERNATOR BELT WITH HYDRAULIC STEERING (0L382122+)	CINGHIA ALTERNATORE CON STERZO IDRAULICO (0L382122+)	1	RM57-862054Q
	CORREA ALTERNADOR SIN DIRECCIÓN HIDRÁULICA	ALTERNATOR BELT WITHOUT HYDRAULIC STEERING	CINGHIA ALTERNATORE SENZA STERZO IDRAULICO	1	REC57-49043A1
	CORREA DIRECCIÓN HIDRÁULICA	HYDRAULIC STEERING BELT	CINGHIA STERZO IDRAULICO	1	REC57-65607Q
	TERMOSTATO (-0L340999)	THERMOSTAT (-0L340999)	TERMOSTATO (-0L340999)	1	REC59078Q3
	TERMOSTATO (0L341000+) & TODOS ENFRIADOR CERRADO	THERMOSTAT (0L341000+) & ALL CLOSED COOLING	TERMOSTATO (0L341000+) E TUTTI RAFFREDDAMENTO CHIUSO	1	REC8M0091470
	FILTRO ACEITE	OIL FILTER	FILTRO OLIO	1	REC35-06003
	ACEITE MOTOR	OIL	OLIO MOTORE	1	RM92-8M0086224U3
3.0LX GM181I/L4 (1990-1997) (0C856569 - OK999999)	BUJIA (-0F603999)	SPARK PLUG (-0F603999)	CANDELE (-0F603999)	4	NGKBR6FS
	BUJIA (0F604000+)	SPARK PLUG (0F604000+)	CANDELE (0F604000+)	4	NGKBPR6EFS
	CORREA ALTERNADOR (1 POLEA GROVE)	ALTERANTOR BELT (1 GROVE PULLEY)	CINGHIA ALTERNATORE (1 PULEGGIA GROVE)	1	REC57-49043A1
	CORREA ALTERNADOR (3 POLEAS GROVE)	ALTERANTOR BELT (3 GROVE PULLEY)	CINGHIA ALTERNATORE (3 PULEGGIA GROVE)	1	REC3852106
	TERMOSTATO	THERMOSTAT	TERMOSTATO	1	REC59078Q3
	TERMOSTATO ENFRIADOR CERRADO	THERMOSTAT CLOSED COOLING	TERMOSTATO RAFFREDDAMENTO CHIUSO	1	REC8M0091470
	CORREA DIRECCION HIDRAULICA	HYDRAULIC STEERING BELT	CINGHIA STERZO IDRAULICO	1	REC57-65607Q
	FILTRO ACEITE	OIL FILTER	FILTRO OLIO	1	REC35-06003
	ACEITE MOTOR	OIL	OLIO MOTORE	1	RM92-8M0086224U3
3.0 MPI EC (1A072812+)	BUJIA	SPARK PLUG	CANDELE	4	NGKTR6IX
	CORREA ALTERNADOR	ALTERANTOR BELT	CINGHIA ALTERNATORE	1	RM57-862054Q
	TERMOSTATO	THERMOSTAT	TERMOSTATO	1	REC8M0091470
	CORREA DIRECCIÓN HIDRÁULICA (940 mm)	HYDRAULIC STEERING BELT (940 mm)	CINGHIA STERZO IDRAULICO (940 mm)	1	REC57-65607Q
	FILTRO ACEITE	OIL FILTER	FILTRO OLIO	1	REC35-06003
	FILTRO GASOLINA	FUEL FILTER	FILTRO BENZINA	1	RM35-866594Q01
	ACEITE MOTOR	OIL	OLIO MOTORE	1	RM92-8M0086227U3
3.0L TKS Plus (1G404114)	BUJIA	SPARK PLUG	CANDELE	4	NGKBPR6EFS
	CORREA ALTERNADOR	ALTERANTOR BELT	CINGHIA ALTERNATORE	1	RM57-862054Q
	TERMOSTATO	THERMOSTAT	TERMOSTATO	1	REC8M0091470
	FILTRO ACEITE	OIL FILTER	FILTRO OLIO	1	REC35-06003
	ACEITE MOTOR	OIL	OLIO MOTORE	1	RM92-8M0086224U3
4.3L (GEN II) (1992-96) (0D714107 - 0F802999)	BUJIA	SPARK PLUG	CANDELE	6	NGKBR6FS
	CORREA ALTERNADOR (46")	ALTERANTOR BELT (46")	CINGHIA ALTERNATORE (46")	1	REC829207
	CORREA DIRECCION HIDRAULICA	HYDRAULIC STEERING BELT	CINGHIA STERZO IDRAULICO	1	REC57-816295Q
	TERMOSTATO 140º	THERMOSTAT 140º	TERMOSTATO 140º	1	REC8M0089715
	TERMOSTATO 160º	THERMOSTAT 160º	TERMOSTATO 160º	1	REC8M0091470
	FILTRO ACEITE	OIL FILTER	FILTRO OLIO	1	REC35-06004
	FILTRO ACEITE (MODELOS CON FILTRO REMOTO)	OIL FILTER (MODELS WITH REMOTE FILTER)	FILTRO OLIO (MODELLI CON FILTRO REMOTO)	1	REC35-06003
	FILTRO GASOLINA	FUEL FILTER	FILTRO BENZINA	1	REC35-802893Q01
	ACEITE MOTOR	OIL	OLIO MOTORE	2	RM92-8M0086227U3
4.3L & LX (GEN +) (1996-98) (0F803000 - 0M614999)	BUJIA	SPARK PLUG	CANDELE	6	NGKBR6FS
	TERMOSTATO 140º	THERMOSTAT 140º	TERMOSTATO 140º	1	REC829207
	TERMOSTATO 160º	THERMOSTAT 160º	TERMOSTATO 160º	1	REC57-816295Q
	FILTRO ACEITE	OIL FILTER	FILTRO OLIO	1	REC8M0089715
	FILTRO ACEITE (FILTRO REMOTO)	OIL FILTER (REMOTE FILTER)	FILTRO OLIO (FILTRO REMOTO)	1	REC8M0091470
	FILTRO GASOLINA	FUEL FILTER	FILTRO BENZINA	1	REC35-06004
	IMPULSOR (BRAVO)	IMPELLER (BRAVO)	GIRANTE (BRAVO)	1	REC35-06003
	ACEITE MOTOR	OIL	OLIO MOTORE	1	REC35-802893Q01
	CORREAS	BELT	CINGHIE		PAG 235
4.3L CARB. ALPHA/ BRAVO (0M61500+)	BUJIA	SPARK PLUG	CANDELE	6	NGKBPR6EFS
	TERMOSTATO 140º	THERMOSTAT 140º	TERMOSTATO 140º	1	REC8M0089715
	TERMOSTATO 160º	THERMOSTAT 160º	TERMOSTATO 160º	1	REC8M0091470
	TERMOSTATO 170º (ENFRIADOR CERRADO)	THERMOSTAT 170º (CLOSED COOLING)	TERMOSTATO 170º (RAFFREDDAMENTO CHIUSO)	1	REC864493
	FILTRO ACEITE	OIL FILTER	FILTRO OLIO	1	REC35-06004
	FILTRO ACEITE (FILTRO REMOTO)	OIL FILTER (REMOTE FILTER)	FILTRO OLIO (FILTRO REMOTO)	1	REC35-06003
	FILTRO GASOLINA	FUEL FILTER	FILTRO BENZINA	1	REC35-802893Q01
	IMPELLER (BRAVO) STD ENFRIADOR	IMPELLER (BRAVO) STD COOLING	GIRANTE (BRAVO) STD REFFREDDAMENTO	1	REC47-59362Q01
	IMPELLER (BRAVO) ENFRIADOR CERRADO	IMPELLER (BRAVO) CLOSED COOLING	GIRANTE (BRAVO) RAFFREDDAMENTO CHIUSO	1	REC47-862232A2
	CORREA ALPHA (DIRECCIÓN ASISTIDA)	ALPHA BELT (POWER STEERING)	CINGHIA ALPHA (SERVOSTERZO)	1	REC57-865615Q04
	CORREA ALPHA (DIRECCIÓN HIDRÁULICA COMPACTA)	ALPHA BELT (COMPACT HYDRAULIC STEERING)	CINGHIA ALPHA (STERZO IDRAULICO COMPATTO)	1	REC57-865615Q09
	CORREA BRAVO (DIRECCIÓN ASISTIDA)	BRAVO BELT (POWER STEERING)	CINGHIA BRAVO (SERVOSTERZO)	1	REC57-865615Q03
	CORREA BRAVO (DIRECCIÓN HIDRÁULICA COMPACTA)	BRAVO BELT (COMPACT HYDRAULIC STEERING)	CINGHIA BRAVO (STERZO IDRAULICO COMPATTO)	1	REC57-865615Q08
	ACEITE MOTOR	OIL	OLIO MOTORE	2	RM92-8M0086227U3

Modelo / Model / Modello	DESCRIPCIÓN	DESCRIPTION	DESCRIZIONE	Unds. / Units / Unità	Ref.
4.3L EFI (GEN+) TBI (0L619000-0L618999)	BUJIA	SPARK PLUG	CANDELE	6	NGKBPR6EFS
	TERMOSTATO 140º	THERMOSTAT 140º	TERMOSTATO 140º	1	REC8M0089715
	TERMOSTATO 160º	THERMOSTAT 160º	TERMOSTATO 160º	1	REC8M0091470
	FILTRO ACEITE	OIL FILTER	FILTRO OLIO	1	REC35-06004
	FILTRO ACEITE (FILTRO REMOTO)	OIL FILTER (REMOTE FILTER)	FILTRO OLIO (FILTRO REMOTO)	1	REC35-06003
	FILTRO GASOLINA	FUEL FILTER	FILTRO BENZINA	1	REC35-802893Q01
	IMPULSOR (BRAVO)	IMPELLER (BRAVO)	GIRANTE (BRAVO)	1	REC47-59362Q01
	ACEITE MOTOR	OIL	OLIO MOTORE	2	RM92-8M0086227U3
	CORREAS	BELT	CINGHIE		PAG 235
4.3L MPI ALPHA/ BRAVO & EC MODELS (ALL SERIES) (OM300000+)	BUJIA	SPARK PLUG	CANDELE	6	NGKTR6IX
	TERMOSTATO 140º (STD ENFRIADOR)	THERMOSTAT 140º (STD COOLING)	TERMOSTATO 140º (STD RAFFREDDAMENTO)	1	REC8M0089715
	TERMOSTATO 160º (STD ENFRIADOR)	THERMOSTAT 160º (STD COOLING)	TERMOSTATO 160º (STD REFFREDDAMENTO)	1	REC8M0091470
	TERMOSTATO 170º (ENFRIADOR CERRADO)	THERMOSTAT 170º (CLOSED COOLING)	TERMOSTATO 170º (RAFFREDDAMENTO CHIUSO)	1	REC864493
	FILTRO ACEITE	OIL FILTER	FILTRO OLIO	1	REC35-06004
	FILTRO ACEITE (FILTRO REMOTO)	OIL FILTER (REMOTE FILTER)	FILTRO OLIO (FILTRO REMOTO)	1	REC35-06003
	FILTRO GASOLINA	FUEL FILTER	FILTRO BENZINA	1	REC35-802893Q01
	IMPULSOR (BRAVO)	IMPELLER (BRAVO)	GIRANTE (BRAVO)	1	REC47-862232A2
	ACEITE MOTOR	OIL	OLIO MOTORE	2	RM92-8M0086227U3
	CORREAS	BELT	CINGHIE		PAG 235
4.5L MPI ALPHA/ BRAVO (2A441953+)	BUJIA	SPARK PLUG	CANDELE	6	NGKBPR5EFS-13
	TERMOSTATO 170º (INTERCAMBIADOR DE CALOR)	THERMOSTAT 170º (HEAT EXCHANGER)	TERMOSTATO 170º (SCAMBIATORE DI CALORE)	1	REC864493
	TERMOSTATO 140º	THERMOSTAT 140º	TERMOSTATO 140º	1	REC8M0089715
	FILTRO ACEITE	OIL FILTER	FILTRO OLIO	1	REC35-06003
	FILTRO GASOLINA	FUEL FILTER	FILTRO BENZINA	1	RAC31871
	IMPELLER (BRAVO)	IMPELLER (BRAVO)	GIRANTE (BRAVO)	1	REC47-862232A2
	ACEITE MOTOR	OIL	OLIO MOTORE	2	RM92-8M0086227U3
5.0L (1988-95) (0B774445 - 0F600999)	BUJIA	SPARK PLUG	CANDELE	8	NGKBR6FS
	TERMOSTATO 140º	THERMOSTAT 140º	TERMOSTATO 140º	1	REC8M0089715
	TERMOSTATO 160º	THERMOSTAT 160º	TERMOSTATO 160º	1	REC8M0091470
	FILTRO ACEITE	OIL FILTER	FILTRO OLIO	1	REC35-06003
	FILTRO GASOLINA	FUEL FILTER	FILTRO BENZINA	1	REC35-802893Q01
	IMPELLER (BRAVO & ENFRIADOR CERRADO)	IMPELLER (BRAVO & CLOSED COOLING SYSTEM)	GIRANTE (BRAVO E SISTEMA RAFFREDDAMENTO CHIUSO)	1	REC47-59362Q01
	CORREA BOMBA DE AGUA (BRAVO)	WATER PUMP BLET (BRAVO)	CINGHIA POMPA DELL'ACQUA (BRAVO)	1	REC57-13457Q
	CORREA DIRECCION HYDRAULICA	HYDRAULIC DIRECTION BELT	CINGHIA STERZO IDRAULICO	1	REC57-34359
	CORREA ALTERNADOR (44")	ALTERNATOR BELT (44")	CINGHIA ALTERNATORE (44")	1	REC3858462
	CORREA ALTERNADOR (46")	ALTERNATOR BELT (46")	CINGHIA ALTERNATORE (46")	1	REC829207
	ACEITE MOTOR	OIL	OLIO MOTORE	2	RM92-8M0086224U3
5.0L & 5.0L EFI (1998-01) (0L015751 - 0M599999)	BUJIA	SPARK PLUG	CANDELE	8	NGKBPR6EFS
	TERMOSTATO 140º	THERMOSTAT 140º	TERMOSTATO 140º	1	REC8M0089715
	TERMOSTATO 160º	THERMOSTAT 160º	TERMOSTATO 160º	1	REC8M0091470
	TERMOSTATO (ENFRIADOR CERRADO)	THERMOSTAT 170º (CLOSED COOLING)	TERMOSTATO 170º (RAFFREDDAMENTO CHIUSO)	1	REC99155T2
	FILTRO ACEITE	OIL FILTER	FILTRO OLIO	1	REC35-06003
	FILTRO GASOLINA	FUEL FILTER	FILTRO BENZINA	1	REC35-802893Q01
	IMPELLER (BRAVO)	IMPELLER (BRAVO)	GIRANTE (BRAVO)	1	REC47-59362Q01
	ACEITE MOTOR	OIL	OLIO MOTORE	2	RM92-8M0086224U3
	CORREAS	BELT	CINGHIE		PAG 235
5.0L CARB. ALPHA/ BRAVO (0M600000+)	BUJIA	SPARK PLUG	CANDELE	8	NGKBRPR6EFS
	TERMOSTATO 140º	THERMOSTAT 140º	TERMOSTATO 140º	1	REC8M0089715
	TERMOSTATO 160º	THERMOSTAT 160º	TERMOSTATO 160º	1	REC8M0091470
	FILTRO ACEITE	OIL FILTER	FILTRO OLIO	1	REC35-06003
	FILTRO GASOLINA	FUEL FILTER	FILTRO BENZINA	1	REC35-802893Q
	IMPULSOR (BRAVO)	IMPELLER (BRAVO)	GIRANTE (BRAVO)	1	REC47-59362Q01
	CORREA (ALPHA DIRECIÓN ASITIDA)	BELT (ALPHA POWER STEERING)	CINGHIA (ALPHA SERVOSTERZO)	1	REC57-865615Q04
	CORREA (ALPHA SIN DIRECIÓN ASISTIDA)	BELT (ALPHA NON POWER STERING)	CINGHIA (ALPHA NO SERVOSTERZO)	1	REC57-865615Q09
	CORREA (BRAVO DIRECCIÓN ASISTIDA)	BELT (BRAVO POWER STEERING)	CINGHIA (BRAVO SERVOSTERZO)	1	REC57-865615Q03
	CORREA (BRAVO SIN DIRECCIÓN ASISTIDA)	BELT (BRAVO NON POWER STEERING)	CINGHIA (BRAVO NO SERVOSTERZO)	1	REC57-865615Q08
	ACEITE MOTOR	OIL	OLIO MOTORE	2	RM92-8M0086224U3
5.0L MPI ALPHA/ BRAVO & EC (0M300000+)	BUJIA	SPARK PLUG	CANDELE	8	NGKITR4A15
	TERMOSTATO 140º	THERMOSTAT 140º	TERMOSTATO 140º	1	REC8M0089715
	TERMOSTATO 160º	THERMOSTAT 160º	TERMOSTATO 160º	1	REC8M0091470
	TERMOSTATO (DRENAJE FÁLCIL 160º)	THERMOSTAT (EASY DRAIN 160º)	TERMOSTATO (SCARICO FACILE 160º)	1	REC99155T2
	TERMOSTATO (DRENAJE FÁCIL 170º)	THERMOSTAT (EASY DRAIN 170º)	TERMOSTATO (SCARICO FACILE 170º)	1	REC864493
	FILTRO ACEITE	OIL FILTER	FILTRO OLIO	1	REC35-06003
	FILTRO GASOLINA	FUEL FILTER	FILTRO BENZINA	1	REC35-802893Q
	FILTRO GASOLINA (MÓDULO GAS.)	FUEL FILTER (FUEL MODULE)	FILTRO BENZINA (MOD. BENZINA)	1	REC35-866171A01
	FILTRO GASOLINA (MÓDULO GAS.)	FUEL FILTER (FUEL MODULE)	FILTRO BENZINA (MOD.BENZINA)	1	REC35-892665
	IMPELLER (BRAVO)	IMPELLER (BRAVO)	GIRANTE (BRAVO)	1	REC47-862232A2
	ACEITE MOTOR	OIL	OLIO MOTORE	2	RM92-8M0086227U3
	CORREAS	BELT	CINGHIE		PAG 235

Modelo Model Modello	DESCRIPCIÓN	DESCRIPTION	DESCRIZIONE	Unds. Units Unità	Ref.
5.7L CARB. ALPHA/ BRAVO & LX/ EFI (1998+) (0B525982 +)	BUJIA (-0K999999)	SPARK PLUG (-0K999999)	CANDELE (-0K999999)	8	NGKBR6FS
	BUJIA (0L010037+)	SPARK PLUG (0K010037+)	CANDELE (0K010037+)	8	NGKBPR6EFS
	TERMOSTATO 140º	THERMOSTAT 140º	TERMOSTATO 140º	1	REC8M0089715
	TERMOSTATO 160º	THERMOSTAT 160º	TERMOSTATO 160º	1	REC8M0091470
	TERMOSTATO (ENFRIADOR CERRADO)	THERMOSTAT (CLOSED COOLING)	TERMOSTATO (RAFFREDDAMENTO CHIUSO)	1	REC99155T2
	FILTRO ACEITE	OIL FILTER	FILTRO OLIO	1	REC35-06003
	FILTRO GASOLINA	FUEL FILTER	FILTRO BENZINA	1	REC35-802893Q
	IMPELLER (BRAVO)	IMPELLER (BRAVO)	GIRANTE (BRAVO)	1	REC47-59362Q01
	ACEITE MOTOR	OIL	OLIO MOTORE	2	RM92-8M0086224U3
	CORREAS	BELT	CINGHIE		PAG 235
350 MAG & 350 MAG EFI (GEN+) (1986+) (0A635178 - 0K999999)	BUJIA	SPARK PLUG	CANDELE	8	NGKBR6FS
	BUJIA (EFI)	SPARK PLUG (EFI)	CANDELE (EFI)	8	NGKBPR6EFS
	FILTRO GASOLINA	FUEL FILTER	FILTRO BENZINA	1	REC35-802893Q
	FILTRO GASOLINA VST (EFI)	FUEL FILTER VST (EFI)	FILTRO BENZINA VST (EFI)	1	REC65L-13915-00
	FILTRO ACEITE	OIL FILTER	FILTRO OLIO	1	REC35-06003
	TERMOSTATO 140º	THERMOSTAT 140º	TERMOSTATO 140º	1	REC8M0089715
	TERMOSTATO 160º	THERMOSTAT 160º	TERMOSTATO 160º	1	REC8M0091470
	IMPELLER (BRAVO)	IMPELLER (BRAVO)	GIRANTE (BRAVO)	1	REC47-59362Q01
	ACEITE MOTOR	OIL	OLIO MOTORE	2	RM92-8M0086224U3
	CORREAS	BELT	CINGHIE		PAG 235
350 MAG/MPI (0F415189+)	BUJIA (-0F601999)	SPARK PLUG (-0F601999)	CANDELE (-0F601999)	8	NGKBR6FS
	BUJIA (0F602000 - 0M299999)	SPARK PLUG (0F602000 - 0M299999)	CANDELE (0F602000 - 0M299999)	8	NGKTR6IX
	BUJIA (0M300000+)	SPARK PLUG (0M300000+)	CANDELE (0M300000+)	8	NGKITR4A15
	FILTRO GASOLINA	FUEL FILTER	FILTRO BENZINA	1	REC35-802893Q
	FILTRO GASOLINA VST (-0M299999)	FUEL FILTER VST (-0M299999)	FILTRO BENZINA VST (-0M299999)	1	REC65L-13915-00
	FILTRO GASOLINA IN-LINE (0M300000 - 0W059999)	FUEL FILTRO IN-LINE (0M300000 - 0W059999)	FILTRO BENZINA IN-LINE (0M300000 - 0W059999)	1	REC864572
	FILTRO GASOLINA VST (0W060000+)	FUEL FILTER VST (0W060000+)	FILTRO BENZINA VST (0W060000+)	1	REC35-866171A01
	FILTRO GASOLINA VST (0W060000+)	FUEL FILTER VST (0W060000+)	FILTRO BENZINA VST (0W060000+)	1	REC35-892665
	FILTRO ACEITE	OIL FILTER	FILTRO OLIO	1	REC35-06003
	IMPULSOR (BRAVO) (-0M299999)	IMPELLER (BRAVO) (-0M299999)	GIRANTE (BRAVO) (-0M299999)	1	REC47-59362Q01
	IMPULSOR (BRAVO) (0M300000+)	IMPELLER (BRAVO) (0M300000+)	GIRANTE (BRAVO) (0M300000+)	1	REC47-862232A2
	TERMOSTATO 140º	THERMOSTAT 140º	TERMOSTATO 140º	1	REC8M0089715
	TERMOSTATO 160º	THERMOSTAT 160º	TERMOSTATO 160º	1	REC8M0091470
	TERMOSTATO (FÁCIL DRENAJE & ENFRIADOR CERRADO)	THERMOSTAT (EASY DRAIN & CLOSED COOLING)	TERMOSTATO (SCARICO FACILE E RAFFREDDAMENTO CHIUSO)	1	REC99155T2
	ACEITE MOTOR	OIL	OLIO MOTORE	2	RM92-8M0086227U3
	CORREAS	BELT	CINGHIE		PAG 235
6.2L MPI & 377 MAG MPI (0L302200+)	BUJIA (0L302200 - 0M299999)	SPARK PLUG (0L302200 - 0M299999)	CANDELE (0L302200 - 0M299999)	8	NGKTR6IX
	BUJIA (0M310000+)	SPARK PLUG (0M310000+)	CANDELE (0M310000+)	8	NGKITR4A15
	BUJIA (0M300000+)	SPARK PLUG (0M300000+)	CANDELE (0M300000+)	8	NGKITR4A15
	FILTRO GASOLINA	FUEL FILTER	FILTRO BENZINA	1	REC35-802893Q
	FILTRO GASOLINA IN-LINE (0M311053+)	FUEL FILTER (0M311053+)	FILTRO BENZINA IN-LINE (0M311053+)	1	REC864572
	FILTRO GASOLINA VST (0M398395+)	FUEL FILTER VST (0M398395+)	FILTRO BENZINA VST (0M398395+)	1	REC35-866171A01
	FILTRO GASOLINA VST (0M398395+)	FUEL FILTER VST (0M398395+)	FILTRO BENZINA VST (0M398395+)	1	REC35-892665
	FILTRO ACEITE	OIL FILTER	FILTRO OLIO	1	REC35-06003
	FILTRO ACEITE TRANSMISIÓN HURT/ZEUS	OIL FILTER TRANSMISSION HURT/ZEUS	FILTRO OLIO TRASMISSIONE HURT/ZEUS	1	REC016940
	IMPULSOR (0L302200 - 0M299999)	IMPELLER (0L302200 - 0M299999)	GIRANTE (0L302200 - 0M299999)	1	REC47-59362Q01
	IMPULSOR (0M310000+)	IMPELLER (0M310000+)	GIRANTE (0M310000+)	1	REC47-862232A2
	TERMOSTATO 140º	THERMOSTAT 140º	TERMOSTATO 140º	1	REC8M0089715
	TERMOSTATO 160º	THERMOSTAT 160º	TERMOSTATO 160º	1	REC8M0091470
	TERMOSTATO (DRENAJE FÁCIL & ENFRIADOR CERRADO (-0M316999)	THERMOSTAT (EASY DRAIN & CLOSED COOLING (-0M316999)	TERMOSTATO (SCARICO FACILE & RAFFREDDAMENTO CHIUSO) (-0M316999)	1	REC99155T2
	TERMOSTATO (DRENAJE FÁCIL & ENFRIADOR CERRADO) (0M317000+)	THERMOSTAT (EASY DRAIN & CLOSED COOLING (0M317000+)	TERMOSTATO (SCARICO FACILE & RAFFREDDAMENTO CHIUSO) (0M317000+)	1	REC864493
	ACEITE MOTOR	OIL	OLIO MOTORE	2	RM92-8M0086227U3
	CORREAS	BELT	CINGHIE		PAG 235
7.4L, LX / 454 MAG MPI (1988+) (GEN V&VI) (0M771113 - 0M024330)	BUJIA (0K999999-)	SPARK PLUG (0K999999-)	CANDELE (0K999999-)	8	NGKBR6FS
	BUJIA (0L010003 - 0M024330)	SPARK PLUG (0L010003 - 0M024330)	CANDELE (0L010003 - 0M024330)	8	NGKBPR6EFS
	BUJIA (MPI HORIZON)	SPARK PLUG (MPI HORIZON)	CANDELE (MPI HORIZON)	8	NGKBR6FVX
	FILTRO GASOLINA	FUEL FILTER	FILTRO BENZINA	1	REC35-802893Q
	FILTRO GASOLINA VST (0F602010+)	FUEL FILTER VST (0F602010+)	FILTRO BENZINA VST (0F602010+)	1	REC65L-13915-00
	FILTRO ACEITE	FUEL FILTER	FILTRO BENZINA	1	REC35-06003
	FILTRO ACEITE TRANSMISION HURT/ZEUS	OIL FILTER TRANSMISSION HURT/ZEUS	FILTRO OLIO TRANSMISSIONE HURT/ZEUS	1	REC016940
	IMPELLER	IMPELLER	GIRANTE	1	REC47-59362Q01
	TERMOSTATO 140º	THERMOSTAT 140º	TERMOSTATO 140º	1	REC8M0089715
	TERMOSTATO 160º	THERMOSTAT 160º	TERMOSTATO 160º	1	REC8M0091470
	TERMOSTATO (DRENAJE FÁCIL & ENFRIADOR CERRADO)	THERMOSTAT (EASY DRAIN & CLOSED COOLING)	TERMOSTATO (SCARICO FACILE & RAFFREDDAMENTO CHIUSO	1	REC99155T2
	ACEITE MOTOR	OIL	OLIO MOTORE	2	RM92-8M0086224U3
	CORREAS	BELT	CINGHIE		PAG 235

Modelo Model Modello	DESCRIPCIÓN	DESCRIPTION	DESCRIZIONE	Unds. Units Unità	Ref.
8.1L (0M0206000+)	BUJIA (-2006)	SPARK PLUG (-2006)	CANDELE (-2006)	8	NGKTR55IX
	BUJIA (2007+)	SPARK PLUG (2007+)	CANDELE (2007+)	8	NGKIZFR7M
	FILTRO GASOLINA	FUEL FILTER	FILTRO BENZINA	1	REC35-802893Q
	FILTRO GASOLINA VST	FUEL FILTER VST	FILTRO BENZINA VST	1	REC35-866171A01
	FILTRO GASOLINA VST	FUEL FILTER VST	FILTRO BENZINA VST	1	REC35-892665
	FILTRO ACEITE	OIL FILTER	FILTRO OLIO	1	REC35-06003
	FILTRO ACEITE TRANSMISION HURT/ZEUS	OIL FILTER TRANSMISSION HURT/ZEUS	FILTRO OLIO TRASMISSIONE HURT/ZEUS	1	REC016940
	IMPULSOR	IMPELLER	GIRANTE	1	REC47-862232A2
	ACEITE MOTOR	OIL	OLIO MOTORE	3	RM92-8M0086227U3
	CORREAS	BELT	CINGHIE		PAG 235
8.2L (1A350802 - 2A041665)	BUJIA	SPARK PLUG	CANDELE	8	NGKBPR6ES
	FILTRO GASOLINA	FUEL FILTER	FILTRO BENZINA	1	REC35-802893Q
	FILTRO GASOLINA VST	FUEL FILTER VST	FILTRO BENZINA VST	1	REC35-866171A01
	FILTRO GASOLINA VST	FUEL FILTER VST	FILTRO BENZINA VST	1	REC35-892665
	FILTRO ACEITE	OIL FILTER	FILTRO OLIO	1	REC35-06003
	FILTRO ACEITE TRANSMISION HURT/ZEUS	OIL FILTER TRANSMISSION HURT/ZEUS	FILTRO OLIO TRASMISSIONE HURT/ZEUS	1	REC016940
	IMPULSOR	IMPELLER	GIRANTE	1	REC47-862232A2
	ACEITE MOTOR	OIL	OLIO MOTORE	3	RM92-8M0086227U3
	CORREAS	BELT	CINGHIE		PAG 235

MATERIALES GENÉRICOS PARA REVISIÓN
GENERIC MATERIALS FOR REVISION
MATERIALI GENERICI REVIEW

DESCRIPCIÓN	DESCRIPTION	DESCRIZIONE	REF
PINTURA NEGRA MERCRUISER EN SPRAY	BLACK PAINT MERCRUISER SPRAY	PITTURA NERA MERCRUISER. SPRAY	GS90002
SPRAY IMPRIMACION PARA MOTORES	SPRAY PRIMER FOR ENGINES	PRIMER PER MOTORI. SPRAY	GS90012
BARNIZ TRANSPARENTE PROTECTOR PINTURA EN SPRAY	CLEAR VARNISH, SPRAY PAINT PROTECTOR	VERNICE TRASPARENTE, PROTETTORE DI PITTURA. SPRAY	GS90019
PROTECTOR OXIDO MOTOR EN SPRAY	SPRAY ENGINE PROTECTOR FROM RUST	PROTETTORE MOTORE DALL'OSSIDAZIONE. SPRAY	GS90090
PROTECTOR DIELECTRICO EN SPRAY	SPRAY DIELECTRIC PROTECTOR	PROTETTORE DIELETTRICO. SPRAY	GS90092
BOTE GRASA MARINA 450 g	MARINE GREASE 450 g	GRASSO MARINO 450 g	LUB11404

KITS MANTENIMIENTO COLAS
DRIVES AMINTENANCE KIT
KIT MANUTENZIONE PIEDE

NEW

MOTOR ENGINE MOTORE	REF					UNID. UNITS UNITA
ALPHA ONE GEN I	RECKITALPHAI	REC60932A4	FUELLE TRANSON	BELOW	MANICOTTO TRANSON	1
		REC54-815504320	ABRAZADERA INOX 32-50	HOSE CLAMP 32-50	FASCETTA INOX 32-50	1
		REC47-89984Q5	KIT BOMBA AGUA	WATER PUMP KITS	KIT POMPA ACQUA	1
		CMALPHAGEN1KITA	KIT ÁNODOS	ANODES KIT	KIT ANODI	1
		REC12-191833	JUNTA	GASKET	GUARNIZIONE	2
		REC26-455771	RETÉN	SEAL	PARAOLIO	1
		REC18654A1	FUELLE ESCAPE	EXHAUST BELOW	MANICOTTO SCARICO	1
		REC27-94996Q2	KIT DE JUNTAS	GASKET KIT	KIT GUARNIZIONE	1
ALPHA ONE GEN II	RECKITGENEII	REC816431A1	FUELLE TRANSON	BELOW	MANICOTTO TRANSON	1
		REC54-815504320	ABRAZADERA INOX 32-50	HOSE CLAMP 32-50	FASCETTA INOX 32-50	1
		REC12-191833	JUNTA	GASKET	GUARNIZIONE	2
		REC26-455771	RETÉN	SEAL	PARAOLIO	1
		CMALPHAKITA	KIT ÁNODOS	ANODES KIT	KIT ANODI	1
		REC47-43026Q06	KIT BOMBA AGUA	WATER PUMP KITS	KIT POMPA ACQUA	1
		REC53-815949	CIERRE METALICO	E-RING	CHIUSURA METALLICO	2
		REC18654A1	FUELLE ESCAPE	EXHAUST BELOW	MANICOTTO SCARICO	1
		REC27-94996Q2	KIT DE JUNTAS	GASKET KIT	KIT GUARNIZIONE	1
BRAVO	RECKITBRAVO	REC86840A05	FUELLE TRANSON	BELOW	MANICOTTO TRANSON	1
		REC54-815504320	ABRAZADERA INOX 32-50	HOSE CLAMP 32-50	FASCETTA INOX 32-50	1
		REC12-191833	JUNTA	GASKET	GUARNIZIONE	2
		REC16755Q1	KIT DE JUNTAS	GASKET KIT	KIT GUARNIZIONE	1
		CMBRAVO3KITA	KIT ÁNODOS	ANODES KIT	KIT ANODI	1
		CM806188A	ÁNODO AL	ANODE AL	ANODO AL	1
		REC18654A1	FUELLE ESCAPE	EXHAUST BELOW	MANICOTTO SCARICO	1

GUÍA MANTENIMIENTO TRASMISIONES
GUIDE MAINTENANCE TRANSMISSIONS
GUIDA MANUTENZIONE TRASMISSIONI

Modelo Model Modello	DESCRIPCIÓN	DESCRIPTION	DESCRIZIONE	Unds. Units Unità	Ref.
TR/TRS (1977-93) (4794900+)	KIT JUNTAS TRANSOM	TRANSOM GASKET KIT	KIT GUARNIZIONE TRANSOM	1	REC27-54014Q1
	FUELLE TRANSMISION	TRASMISSION BELLOW	CUFFIA TRASMISSIONE	1	REC60932A4
	TAPON DE NIVEL ACEITE	OIL LEVEL CAP	TAPPO LIVELLO OLIO	1	REC10-79953Q04
	TAPON DRENAJE ACEITE	OIL DRAIN CAP	TAPPO SCARICO OLIO	1	REC10-79953Q04
	ANODO TIMON	RUDDER ANODE	ANODO TIMONE	1	CM31640
	ACEITE SINTETICO 80W-90	SYNTHETIC OIL 80W-90	OLIO SINTETICO 80W-90	2	LUB11564U12
R/ MR/ ALPHA ONE (1983-90) (6216687 - 0F386995)	KIT JUNTAS TRANSOM	TRANSOM GASKET KIT	KIT GUARNIZIONE TRANSOM	1	REC27-94996Q2
	RODAMIENTO TRANSOM	TRANSOM BEARING	CUSCINETTO TRANSOM	1	REC30-879194A01
	FUELLE TRANSMISION	TRASMISSION BELLOW	CUFFIA TRASMISSIONE	1	REC60932A4
	FUELLE ESCAPE	EXHAUST BELLOW	CUFFIA DI SCARICO	1	REC18654A1
	FUELLE ESCAPE TUBO (454 MAG)	EXHAUST BELLOW TUBE (454 MAG)	CUFFIA DI SCARICO TUBO (454 MAG)	1	REC78458A1
	FUELLE CABLE CAMBIO	SHIFT WIRE BELLOW	CUFFIA CAVO CAMBIO	1	REC74639Q02
	TAPON DE NIVEL ACEITE	OIL LEVEL CAP	TAPPO LIVELLO OLIO	1	REC10-79953Q04
	TAPON DERENAJE ACEITE	OIL DRAIN CAP	TAPPO SCARICO OLIO	1	REC22-67892A05
	ANODO TIMON (2-3/8")	RUDDER ANODE (2-3/8")	ANODO TIMONE (2-3/8")	1	CM31640
	ANODO TIMON (4")	RUDDER ANODE (4")	ANODO TIMONE (4")	1	CM34127
	ANODO BOLA TRANSOM	BALL ANODE TRANSOM	ANODO BOLLA TRANSOM	1	REC55989Q9
	ANODO TRANSOM (MERCAT)	TRANSOM ANODE (MERCAT)	ANODO TRANSOM (MERCAT)	1	CM821631
	ANODO TRAN (MERCAT) ANTIGUO	TRAN ANODE (MERCAT) OLD	ANODO TRAN (MERCAT) VECCHIO	1	CM43994
	KIT ANODOS	ANODE KIT	KIT ANODI	1	CMALPHAGEN1KITA CMALPHAGEN1KITM TENKITALPHAONE/1
	TUBO AGUA 5/8" TRANSOM	WATER TUBE 5/8" TRANSOM	TUBO ACQUA 5/8" TRANSOM	1	REC32-32461
	TUBO AGUA 3/4" TRANSOM	WATER TUBE 3/4" TRANSOM	TUBO ACQUA 3/4" TRANSOM	1	REC32-4172533
	IMULSOR	IMPELLER	GIRANTE	1	REC47-89984T4
	KIT BOMBA DE AGUA	WATER PUMP KIT	KIT POMPA ACQUA	1	REC47-89984Q5
	KIT CABLE CAMBIO	SHIFT WIRE KIT	KIT CAVO CAMBIO	1	REC865436A03
	KIT SENSORES TRIM	SENSOR TRIM KIT	KIT SENSORI TRIM	1	REC805320A03
	ACEITE SINTETICO 80W-90	SYNTHETIC OIL 80W-90	OLIO SINTETICO 80W-90	2	LUB11564U12
APLHA ONE (GENII) (1991+) (0D469259+)	KIT JUNTAS TRANSOM	TRANSOM GASKET KIT	KIT GUARNIZIONE TRANSOM	1	REC27-94996Q2
	RODAMIENTO TRANSOM	TRANSOM BEARING	CUSCINETTO TRANSOM	1	REC30-879194A01
	FUELLE TRANSMISION	TRASMISSION BELLOW	CUFFIA TRASMISSIONE	1	REC816431A1
	FUELLE ESCAPE	EXHAUST BELLOW	CUFFIA DI SCARICO	1	REC18654A1
	FUELLE CABLE CAMBIO	SHIFT WIRE BELLOW	CUFFIA CAVO CAMBIO	1	REC74639Q02
	TAPON DE NIVEL ACEITE	OIL LEVEL CAP	TAPPO LIVELLO OLIO	1	REC10-79953Q04
	TAPON DERENAJE ACEITE	OIL DRAIN CAP	TAPPO SCARICO OLIO	1	REC22-67892A05
	ANODO PLACA	PLATE ANODE	ANODO PIASTRA	1	CM821629
	ANODO TRANSOM (MERCAT)	TRANSOM ANODE (MERCAT)	ANODO TRANSOM (MERCAT)	1	CM821631
	ANODO TIMON (PLANO)	RUDDER ANODE (FLAT)	ANODO TIMONE (PLANO)	1	CM762145
	ANODO TIMON (ALETA)	RUDDER ANODE (FLAP)	ANODO TIMONE (FLAP)	1	CM46399
	ANODO HELICE (CARRIER)	PROPELLER ANODE (CARRIER)	ANODO ELICA (CARRIER)	1	CM806105
	ANODO BRAZO TRIM	TRIM ARM ANODE	ANODO BRACCIO TRIM	2	CM806189
	KIT ANODOS	ANODE KIT	KIT ANODI	1	CMALPHAKITA CMALPHAKITM TENKITALPHAONE/2
	TUBO AGUA TRANSOM	WATER TUBE TRANSOM	TUBO ACQUA TRANSOM	1	REC32-4172533
	IMPULSOR	IMPELLER	GIRANTE	1	REC47-43026Q02
	KIT BOMBA DE AGUA	WATER PUMP KIT	KIT POMPA ACQUA	1	REC817275Q05
	KIT CABLE CAMBIO	SHIFT WIRE KIT	KIT CAVO CAMBIO	1	REC865436A03
	KIT SENSORES TRIM	SENSOR TRIM KIT	KIT SENSORI TRIM	1	REC805320A03
	ACEITE SINTETICO 80W-90	SYNTHETIC OIL 80W-90	OLIO SINTETICO 80W-90	2	LUB11564U12
BRAVO I / II & III	KIT JUNTAS TRANSOM	TRANSOM GASKET KIT	KIT GUARNIZIONE TRANSOM	1	REC16755Q1
	RODAMIENTO TRANSOM	TRANSOM BEARING	CUSCINETTO TRANSOM	1	REC30-879194A01
	FUELLE TRANSMISION	TRASMISSION BELLOW	CUFFIA TRASMISSIONE	1	REC86840A05
	FUELLE ESCAPE	EXHAUST BELLOW	CUFFIA DI SCARICO	1	REC18654A1
	FUELLE ESCAPE TUBO	EXHAUST BELLOW	CUFFIA DI SCARICO	1	REC78458A1
	FUELLE CABLE CAMBIO	SHIFT WIRE BELLOW	CUFFIA CAVO CAMBIO	1	REC74639Q02
	TAPON DE NIVEL ACEITE	OIL LEVEL CAP	TAPPO LIVELLO OLIO	1	REC22-67892A05
	TAPON DERENAJE ACEITE	OIL DRAIN CAP	TAPPO SCARICO OLIO	1	REC22-67892A05
	ANODO PLACA	PLATE ANODE	ANODO PIASTRA	1	CM821630
	ANODO TRANSOM (MERCAT)	TRANSOM ANODE (MERCAT)	ANODO TRANSOM (MERCAT)	1	CM43994
	ANODO TIMON (PLANO CON ROSCA)	RUDDER ANODE (FLAT WITH THREAD)	ANODO TIMONE (PLANO CON FILO)	1	CM76214Q5
	ANODO TIMON (PLANO SIN ROSCA)	RUDDER ANODE (FLAT WITHOUT THREAD)	ANODO TIMONE (PLANO SENZA FILO)	1	CM762144
	ANODO HELICE (CARRIER)	PROPELLER ANODE (CARRIER)	ANODO ELICA (CARRIER)	1	CM806188
	ANODO EJE HELICE (BRAVO III 2004+)	SHAFT PROPELLER ANODE (BRAVO III 2004+)	ANODO ASSE ELICA (BRAVO III 2004+)	1	CM865182CZ
	ANODO BRAZO TRIM	TRIM ARM ANODE	ANODO BRACCIO TRIM	2	CM806190
	ANODO BOLA TRANSOM	BALL ANODE TRANSOM	ANODO BOLLA TRANSOM	1	REC55989Q9
	KIT ANODOS BRAVO I	ANODE KIT BRAVO I	KIT ANODI BRAVO I	1	CMBRAVO1KITA CMBRAVO1KITM TENKITBRAVOI
	KIT ANODOS BRAVO II	ANODE KIT BRAVO II	KIT ANODI BRAVO II	1	CMBRAVO2Y3KITA CMBRAVO2Y3KITM TENKITBRAVOII-III
	KIT ANODOS BRAVO III	ANODE KIT BRAVO III	KIT ANODI BRAVO III	1	CMBRAVO3KITA CMBRAVO3KITM TENKITBRAVOIII-04
	TUBO AGUA TRANSOM (BRAVO I)	WATER TUBE TRANSOM (BRAVO I)	TUBO ACQUA TRANSOM (DESIGN 1)	1	REC32-43437
	KIT CABLE CAMBIO	SHIFT WIRE KIT	KIT CAVO CAMBIO	1	REC815471T1
	KIT SENSORES TRIM	SENSOR TRIM KIT	KIT SENSORI TRIM	1	REC805320A03
	ACEITE SINTETICO 80W-90	SYNTHETIC OIL 80W-90	OLIO SINTETICO 80W-90	3	LUB11564U12

HÉLICES ALUMINO E INOXIDABLES DE 3 Y 4 PALAS
3 & 4 BLADE ALUMINUM & STAINLESS STEEL PROPELLERS
ELICHE ALLUMINIO E INOX DA 3 E 4 PALE

SISTEMA CODIGO REFERENCIAS
PART NO. CODING SYSTEM
SISTEMA DI CODICE

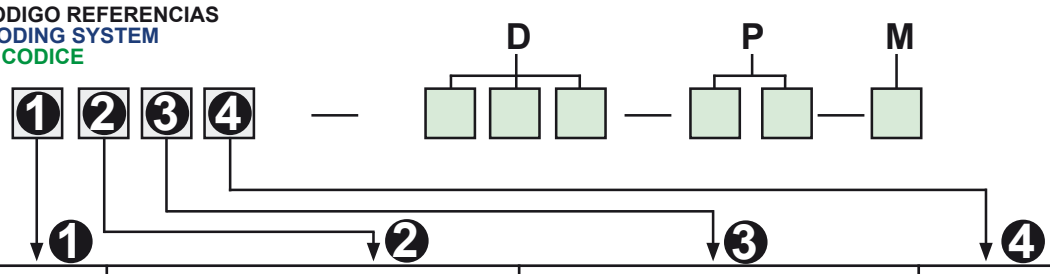

1	2	3	4
1. Mercury, Mariner 2. Johnson, Evinrude 3. Yamaha 4. Suzuki 5. Tohatsu 6. 7. 8. Volvo Penta 9. Rubex System	0.5,6,8 and 9.8 HP Grupo /Group / Gruppo 1. A Grupo /Group / Gruppo 2. B Grupo /Group / Gruppo 3. C Grupo /Group / Gruppo 4. D Grupo /Group / Gruppo 5. E Grupo /Group / Gruppo 6. F Grupo /Group / Gruppo 7. VP (Cubo std./Std. Hub / mozzo std.) 8. VP (Cubo largo /Long Hub / mozzo lungo)	1. Aluminio /Aluminum / Alluminio 2. **Saturn** Acero inox. /S.S. / Acciaio inox. 3. **New Saturn** Acero inox. /S.S. / Acciaio inox. 4. **Titan** Acero inox. /S.S. / Acciaio inox. 5. **HR Titan** Acero inox. /S.S. / Acciaio inox.	1. 3R Rubber Hub 2. 3L Rubber Hub 3. 4R Rubber Hub 4. 4L Rubber Hub

Ejemplo / Note / Esempio

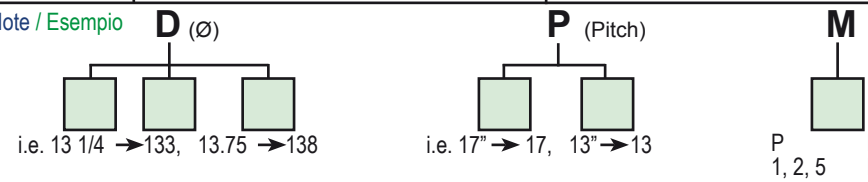

i.e. 13 1/4 → 133, 13.75 → 138

i.e. 17" → 17, 13" → 13

P Pin Drive Propeller
1, 2, 5 Different Propeller Hub Fitting Spec.

SOLAS
AMITA 3

- Helices de aluminio de 3 palas con núcleo de goma de gran resistencia.
- 3 blade aluminum propeller with heavy duty rubber hub.
- Eliche in alluminio a 3 pale con mozzi in gomma ad alta resistenza.

SOLAS
NEW SATURN PROP

- Helices de acero inoxidable de 3 palas.
- Ofrece buena aceleración y rendimiento.
- Tamaño más pequeño que ofrece un diámetro extragrande.
- Three blade stainless steel propeller.
- Offers good acceleration & all-round performance.
- Smaller pitch sizes offered in extra large diameter with increased blade area.
- Eliche in acciaio inox a 3 pale.
- Consentono buone accellerazioni.
- Con un'area più ampia nelle pale.

SOLAS
LEXOR

- Hélices de acero inox. de 3 palas anchas.
- Gran diámetro.
- Mejor aceleración y ahorro de combustible.
- 3 blade stainles steel propeller.
- Large diameter and blade area for big boat loads.
- Great high speed performace without sacrificing mid-range speeds.
- Excellent fuel economy for offshore boats.
- Eliche inacciaio inox da 3 pale larghe.
- Migliore accelerazione.

SOLAS
AMITA 4

- Helices de aluminio de 4 palas con núcleo de goma de gran resistencia.
- Van muy suaves a poca velocidad y hace el barco muy manejable con la mar picada.
- 4 Blade aluminum propeller with heavy duty rubber hub.
- Smoother low speed makes the offshore boating activity much easier.
- Eliche in alluminio a 4 pale con mozzo in gomma ad alta resistenza.
- Ideale per basse velocità, rendono l'imbarcazione molto maneggevole anche con mare mosso.

SOLAS
HR TITAN 3 PROP

- Hélice de acero inoxidable de 3 palas.
- Alto rendimiento para cascos de alta velocidad.
- La inclinación de la hoja proporciona un excelente elevación de proa y aceleración.
- El diseño de copa grande aumenta la mordida y reduce el deslizamiento.
- Three blade stainless steel propeller.
- Performance prop for high speed planning hulls.
- High rake blade design provides excellent bow lift and acceleration.
- Heavy cup design increases bite and reduces slip.
- Eliche di acciaio inox a 3 pale.
- Alte prestazioni per scafi ad alta velocità.
- Il passo della pala fornisce un'eccellente elevazione e accelerazione.
- Il disegno della coppa aumenta le prestazioni e riduce lo slittamento.

HP	R.O. OEM	B	D	P	R	TIPO TYPE	ALUMINIO ALUMINIUM ALLUMINIO		INOX STAINLESS STEEL ACCIAIO INOSSIDABILE		
							AMITA 3	AMITA 4	NEW SATURN	HR TITAN 3	LEXOR
ALPHA ONE	48-78114A45	3	16	13	R	BLACK MAX	SOL1511-160-13		SOL1531-156-13		
	48-78116A4	3	15 1/2	15	R	BLACK MAX	SOL1511-150-15	SOL1513-148-15	SOL1531-145-15		
	48-832828A45	3	15	17	R	BLACK MAX	SOL1511-148-17	SOL1513-145-17	SOL1531-143-17		
	48-832830A45	3	14 1/2	19	R	BLACK MAX	SOL1511-145-19	SOL1513-143-19	SOL1531-140-19		
	48-832832A45	3	14 1/2	21	R	BLACK MAX	SOL1511-143-21	SOL1513-140-21	SOL1531-140-21		
	48-832834A45	3	14	23	R	BLACK MAX	SOL1511-142-23	SOL1513-140-23	SOL1531-140-23		
	48-78126A45	3	13 3/8	25	R	BLACK MAX			SOL1531-140-25		
	48-831850A45	4	15	16	R	ALPHA 4		SOL1513-145-17			
	48-834851A45	4	15	16	L	ALPHA 4		SOL1514-145-17			
	48-834852A45	4	14 1/2	18	R	ALPHA 4		SOL1513-143-19			
	48-834853A45	4	14 1/2	18	L	ALPHA 4		SOL1514-143-19			
	48-834854A45	4	14	20	R	ALPHA 4		SOL1513-140-21			
	48-834855A45	4	14	20	L	ALPHA 4		SOL1514-140-21			
	48-16312A46	3	14 1/2	15	R	VENGEANCE			SOL1531-145-15		
	48-16314A46	3	14 1/2	17	R	VENGEANCE			SOL1531-143-17	SOL1551-148-16	
	48-16315A46	3	14 1/2	17	L	VENGEANCE			SOL1532-143-17	SOL1552-148-16	
	48-16316A46	3	14	19	R	VENGEANCE			SOL1531-140-19	SOL1551-148-18	
	48-16317A46	3	14	19	L	VENGEANCE			SOL1532-140-19	SOL1552-148-18	
	48-16318A46	3	13 3/4	21	R	VENGEANCE			SOL1531-140-21	SOL1551-148-20	
	48-16319A46	3	13 3/4	21	L	VENGEANCE			SOL1532-140-21	SOL1552-148-20	
	48-16320A46	3	13 1/2	23	R	VENGEANCE			SOL1531-140-23	SOL1551-143-22	
	48-16321A46	3	13 1/2	23	L	VENGEANCE			SOL1532-140-23	SOL1552-143-22	
BRAVO ONE	48-16322A46	3	13 3/8	25	R	VENGEANCE			SOL1531-140-25	SOL1551-140-24	
	48-16544A46	3	14	19	R	LASER II				SOL1551-148-19	
	48-16543A46	3	14	19	L	LASER II				SOL1552-148-19	
	48-16546A46	3	13 7/8	21	R	LASER II				SOL1551-145-21	
	48-16545A46	3	13 7/8	21	L	LASER II				SOL1552-145-21	
	48-16548A46	3	13 3/4	23	R	LASER II				SOL1551-143-22	
	48-16547A46	3	13 3/4	23	L	LASER II				SOL1552-143-22	
	48-16550A46	3	13 3/4	25	R	LASER II				SOL1551-140-24	
	48-16549A46	3	13 3/4	25	L	LASER II				SOL1552-140-24	
	48-826072A46	3	16	13	R	MIRAGE PLUS	SOL1511-160-13		,		
	48-19838A46	3	15 3/4	15	R	MIRAGE PLUS	SOL1511-158-15				
	48-19841A46	3	15 3/4	15	L	MIRAGE PLUS	SOL1512-158-15				
	48-18278A46	3	15 1/2	17	R	MIRAGE PLUS	SOL1511-155-17				SOL1571-155-17
	48-90159A46	3	15 1/2	17	L	MIRAGE PLUS	SOL1512-155-17				SOL1572-155-17
	48-13700A46	3	15 1/4	19	R	MIRAGE PLUS	SOL1511-153-19				SOL1571-153-19
	48-13701A46	3	15 1/4	19	L	MIRAGE PLUS	SOL1512-153-19				SOL1572-153-19
	48-13702A46	3	13 3/4	21	R	MIRAGE PLUS	SOL1511-153-21				SOL1571-150-21
	48-13703A46	3	14 3/4	21	L	MIRAGE PLUS	SOL1512-153-21				SOL1572-150-21
	48-13704A46	3	14 5/8	23	R	MIRAGE PLUS	SOL1511-153-23				SOL1571-148-23
	48-13705A46	3	14 5/8	23	L	MIRAGE PLUS					SOL1571-148-23
	48-13706A46	3	14 1/2	25	R	MIRAGE PLUS					SOL1571-145-25
	48-13707A46	3	14 1/2	25	L	MIRAGE PLUS					SOL1572-145-25
	48-18610A40	3	19 1/4	15	R	ALUM	SOL1611-193-15			SOL1641-193-15	
	48-18611A40	3	19 1/4	15	L	ALUM	SOL1612-193-15			SOL1642-193-15	
	48-18612A40	3	18 3/4	17	R	ALUM	SOL1611-188-17			SOL1641-188-17	
	48-18613A40	3	18 3/4	17	L	ALUM	SOL1612-188-17			SOL1642-188-17	
	48-18614A40	3	18 1/4	19	R	ALUM	SOL1611-183-19			SOL1641-183-19	
BRAVO II	48-18615A40	3	18 1/4	19	L	ALUM	SOL1612-183-19			SOL1642-183-19	
4.3L, LH, EFI	48-18616A40	3	17 3/4	21	R	ALUM	SOL1611-178-21			SOL1641-178-21	
5.0L EFI	48-18617A40	3	17 3/4	21	L	ALUM	SOL1612-178-21			SOL1642-178-21	
350 MAG EMPI	48-18618A40	3	17 1/2	23	R	ALUM				SOL1641-175-23	
454 MAG MPI	48-18619A40	3	17 1/2	23	L	ALUM				SOL1642-175-23	
502 MAG MPI	48-18620A40	3	17 1/4	25	R	ALUM				SOL1641-175-23	
D2.8L,	48-18621A40	3	17 1/4	25	L	ALUM				SOL1642-173-25	
D-TRONIC	48-18610A6	3	19 1/4	15	R	SS	SOL1611-193-15			SOL1641-193-15	
D3.6L	48-18611A6	3	19 1/4	15	L	SS	SOL1612-193-15			SOL1642-193-15	
D4.2L	48-18612A6	3	18 3/4	17	R	SS	SOL1611-188-17			SOL1641-188-17	
D-TRONIC	48-18613A6	3	18 3/4	17	L	SS	SOL1612-188-17			SOL1642-188-17	
D7.3L	48-18614A6	3	18 1/4	19	R	SS	SOL1611-183-19			SOL1641-183-19	
D-TRONIC	48-18615A6	3	18 1/4	19	L	SS	SOL1612-183-19			SOL1642-183-19	
7.4L MPI	48-18616A6	3	17 3/4	21	R	SS	SOL1611-178-21			SOL1641-178-21	
	48-18617A6	3	17 3/4	21	L	SS	SOL1612-178-21			SOL1642-178-21	
	48-18618A6	3	17 1/2	23	R	SS				SOL1641-175-23	
	48-18619A6	3	17 1/2	23	L	SS				SOL1642-175-23	
	48-18620A6	3	17 1/4	25	R	SS				SOL1641-173-25	
	48-18621A6	3	17 1/4	25	L	SS				SOL1642-173-25	

B= PALAS / Blades / Pale
D= DIÁMETRO / Diametre / Diametro
P= PASO / Pich / Passo

R=ROTACIÓN / Rotation / Rotazione
(R) Derecha / Right / DX
(L) Izquierda / Left /SX

BRAVO III

HELICES DE ACERO INOXIDABLE
Hélices delanteras de 4 palas y hélices traseras de 3 palas. 19 estrías y escape a través de la hélice.
STAINLESS STEEL PROPELLERS
Front propellers with 4 blades & rear propellers with 3 blades. 19 Tooth Spline and Thru hub exhaust.
ELICHE IN ACCIAIO INOX
Eliche anteriori da 4 pale e eliche posteriori da 3 pale. 19 denti e scarico all'elica.

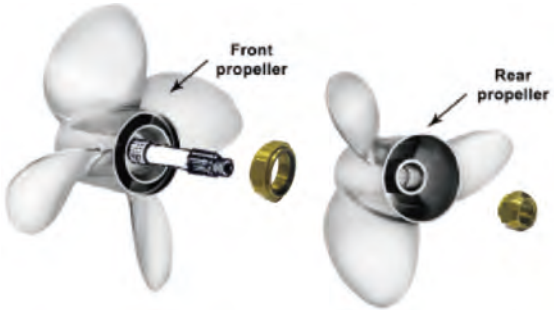

REF	POSICIÓN DELANTERA FRONT POSITION POSIZIONE ANTERIORE	POSICIÓN TRASERA REAR POSITION POSIZIONE POSTERIORE	PALAS BLADES PALE	Ø	PASO PITCH PASSO	ROTACIÓN IZQUIERDA LEFT ROTATION ROTAZIONE SINISTRA	ROTACIÓN DERECHA RIGHT ROTATION ROTAZIONE DESTRA
SOL1654-160-20	✓		4	16"	20	✓	
SOL1651-144-20		✓	3	14 3/8"	20		✓
SOL1654-160-21	✓		4	16"	21	✓	
SOL1651-144-21		✓	3	14 3/8"	21		✓
SOL1654-158-22	✓		4	15 3/4"	22	✓	
SOL1651-143-22		✓	3	14 1/4"	22		✓
SOL1654-158-23	✓		4	15 3/4"	23	✓	
SOL1651-143-23		✓	3	14 1/4"	23		✓
SOL1654-155-24	✓		4	15 1/2"	24	✓	
SOL1651-140-24		✓	3	14"	24		✓
SOL1654-155-25	✓		4	15 1/2"	25	✓	
SOL1651-140-25		✓	3	14"	25		✓
SOL1654-155-26	✓		4	15 1/2"	26	✓	
SOL1651-140-26		✓	3	14"	26		✓
SOL1654-155-27	✓		4	15"	27	✓	
SOL1651-140-27		✓	3	13 3/4"	27		✓
SOL1654-150-28	✓		4	15"	28	✓	
SOL1651-138-28		✓	3	13 3/4"	28		✓

HÉLICES 3 PALAS ALPHA ONE Y BRAVO ONE
3 BLADE PROPELLERS ALPHA ONE & BRAVO ONE
ELICHE DA 3 PALE ALPHA ONE E BRAVO ONE

RUBEX

Altas prestaciones. Núcleo de goma intercambiable con sistemas flo-torq & Vorterx System. Disponible en acero inox y aluminio
High performance / Ruber Hub interchangeable with flo-torq & Vorterx Sistem. Avaliable in stainles Steel & Aluminium Propeller
Alte prestazioni. Mozzo in gomma intercambiabile con sistema flo-torq & Vortex System. Disponibile in acciao inos e alluminio.

Ref.	R.O. OEM
SOLRBX-102	

MOTORES / ENGINES / MOTORI
ALPHA ONE
BRAVO ONE

HÉLICE DE ALUMINIO HASTA 400 HP, 15 DIENTES
ALUMINUM PROPELLERS, LESS THAN 400 HP, 15 TOOTH SPLINE
ELICHE IN ALLUMINIO, FINO A 400 HP, 15 DENTI

REF	PALAS BLADES PALE	Ø	PASO PITCH PASSO	ROTACIÓN ROTATION ROTAZIONE
SOL9511-153-13	3	15,3	13	R
SOL9511-150-15	3	15	15	R
SOL9512-150-15	3	15	15	L
SOL9511-148-17	3	14,8	17	R
SOL9512-148-17	3	14,8	17	L
SOL9511-145-19	3	14,5	19	R
SOL9512-145-19	3	14,5	19	L
SOL9511-143-21	3	14,3	21	R
SOL9512-143-21	3	14,3	21	L
SOL9513-148-15	4	14,75	15	R
SOL9513-145-17	4	14,5	17	R
SOL9513-143-19	4	14,25	19	R
SOL9513-140-21	4	14	21	R

HELICE DE ACERO INOX. HASTA 400 HP, 15 DIENTES
STAINLESS STEEL PROPELLERS, LESS THAN 400 HP, 15 TOOTH SPLINE
ELICHE IN ACCIAIO INOX., FINO A 400 HP, 15 DENTI

RUBEX L3

REF	PALAS BLADES PALE	Ø	PASO PITCH PASSO	ROTACIÓN ROTATION ROTAZIONE
SOL9571-158-15	3	15 3/4	15	R
SOL9572-158-15	3	15 3/4	15	L
SOL9571-155-17	3	15 1/2	17	R
SOL9572-155-17	3	15 1/2	17	L
SOL9571-153-19	3	15 1/4	19	R
SOL9572-153-19	3	15 1/4	19	L
SOL9571-150-21	3	15	21	R
SOL9572-150-21	3	15	21	L
SOL9571-148-23	3	14 3/4	23	R
SOL9572-148-23	3	14 3/4	23	L
SOL9571-145-25	3	14 1/2	25	R
SOL9572-145-25	3	14 1/2	25	L

RUBEX NS3

REF	PALAS BLADES PALE	Ø	PASO PITCH PASSO	ROTACIÓN ROTATION ROTAZIONE
SOL9531-145-15	3	14 1/2	15	R
SOL9532-145-15	3	14 1/2	15	L
SOL9531-143-17	3	14 1/4	17	R
SOL9532-143-17	3	14 1/4	17	L
SOL9531-140-19	3	14	19	R
SOL9532-140-19	3	14	19	L
SOL9531-140-21	3	14	21	R
SOL9532-140-21	3	14	21	L
SOL9531-140-23	3	14	23	R
SOL9532-140-23	3	14	23	L

TABLA DE APLICACIÓN DE HÉLICES SOLAS
PROPELLERS SOLAS APPLICATION GUIDE
GUIDA APPLICAZIONE ELICHE SOLAS

	AMITA3	AMITA4	BRAVO TWO	SATURN	NEW SATURN	TITAN	HR TITAN3	HR TITAN4	SCORPION	LEXOR	SOLAS SKI	SOLAS PLASTIC	HIGH THRUST
FUERABORDA / OUTBOARD / FUORIBORDO													
INFLATABLE	✔	✔		✔	✔	✔						✔	
ALUMINIUM	✔			✔	✔	✔							
SKI BOAT	✔	✔				✔	✔						
BASSBOAT	✔							✔	✔				
FLATS BOAT	✔							✔					
BAY BOAT										✔			
WALLEYE BOAT	✔							✔					
OFFSHORE SINGLE	✔	✔				✔	✔	✔		✔			
OFFSHORE DUAL	✔	✔				✔	✔	✔		✔			
SPORT BOAT SINGLE										✔			
SPORT BOAT DUAL								✔		✔			
HEAVY WORK BOAT	✔	✔			✔	✔		✔					
COMMERCIAL	✔			✔									
SAIL DRIVE													✔
PLEASURE RUNABAOUT	✔	✔		✔	✔	✔		✔					
DECK BOAT		✔						✔					
PONTOON	✔	✔		✔	✔	✔							
DENTROFUERABORDA / STERNDRIVE / ENTROFUORIBORDO													
SKI BOAT													
SPORT BOAT SINGLE								✔		✔			
SPORT BOAT DUAL								✔		✔			
FAMILY CRUISER	✔	✔				✔	✔	✔		✔			
CRUISER BOAT			✔										
DECK BOAT								✔					
PONTOON								✔		✔			
HOUSEBOAT	✔	✔		✔	✔	✔		✔		✔			
INBOARD SKI BOAT											✔		
CARACTERÍSTICAS / FEATURES / CARATTERISTICHE													
MATERIAL MATERIAL MATERIALE	AL	AL	AL ACERO INOX STAINLESS STEEEL ACCIAIO INOX	ACERO INOX STAINLESS STEEEL ACCIAIO INOX	ACERO INOX STAINLESS STEEEL ACCIAIO INOX	ACERO INOX STAINLESS STEEEL ACCIAIO INOX	ACERO INOX STAINLESS STEEEL ACCIAIO INOX	ACERO INOX STAINLESS STEEEL ACCIAIO INOX	ACERO INOX STAINLESS STEEEL ACCIAIO INOX	ACERO INOX STAINLESS STEEEL ACCIAIO INOX	ACERO INOX STAINLESS STEEEL ACCIAIO INOX	PLÁSTICO PLASTIC PLASTICA	AL
PALAS BLADES PALE	3	4	3	3	3	3	3	4	3	3	3.4	3	4
ROTACIÓN ROTATION ROTAZIONE	IZQUIERDA LEFT SINISTRA	IZQUIERDA LEFT SINISTRA	IZQUIERDA LEFT SINISTRA	IZQUIERDA LEFT SINISTRA	IZQUIERDA LEFT SINISTRA	IZQUIERDA LEFT SINISTRA	IZQUIERDA LEFT SINISTRA	IZQUIERDA LEFT SINISTRA	IZQUIERDA LEFT SINISTRA	IZQUIERDA LEFT SINISTRA	DERECHA RIGHT DESTRA	DERECHA RIGHT DESTRA	DERECHA RIGHT DESTRA
NÚCLEO HUB MOZZO	GOMA RUBBER GOMMA	GOMA RUBBER GOMMA	GOMA RUBBER GOMMA	GOMA RUBBER GOMMA	GOMA RUBBER GOMMA	GOMA RUBBER GOMMA	GOMA RUBBER GOMMA	GOMA RUBBER GOMMA	GOMA RUBBER GOMMA	GOMA RUBBER GOMMA			GOMA RUBBER GOMMA

ÍNDICE / TABLE OF CONTENTS / INDICE
REF-->R.O. / OEM

REF.	R.O. /OEM	PAG
A/P5408		109
AM603905		139
AM603910		139
AM603915		139
AM603920		139
AM603930		139
BA1-47638	47638A1	93-123
BAMC-1-58759	58759A1	116
BAMC-1-58759	58759A10	116
BAMC-1-58759	58759A13	116
BAMC-1-58759	58759A14	100-116-121-123-124
BAMC-1-63122	63122A10	93-116
BAMC-1-63122	63122A13	93-116
BAMC-1-63122	63122A14	93-116
BAMC-1-63122		123-124
BAMC-1-860235	806867A12	118
BAMC-1-860235	806867A3	118
BAMC-1-860235	860235A03	98-118
BAMC-1-860235		124
BAMC-1-95862	95862A5	97-116-123-124
BAMC-20-14478	14478T	122
BAMC-20-14478	14478T01	101-103-111-113-122
BAMC-20-55538	39920	119
BAMC-20-55538	55538A2	93-119-123
BAMC-20-864908A1	864908A1	104-107-122
BAMC1-47735	47735	117
BAMC1-47735	47735A1	117
BAMC1-47735	47735A17	114-117
BAMC1-47735		121-123-125
BAMC1-47736	47736	117
BAMC1-47736	47736A17	114-117
BAMC1-47736		121-123-125
BAMC1-47737	47737A1	114-117
BAMC1-47737	47737A10	117
BAMC1-47737		121-123
BAMC1-47738	47738A1	114-117
BAMC1-47738	47738A10	117
BAMC1-47738		121-123
BAMC20-61811A4	61811A3	121
BAMC20-61811A4	61811A4	121
BAMC20-61811A4		114
BAMC20-61851A3	61851A3	100-109-115-121
BAMC20-72963	48101A1	118
BAMC20-72963	72963A1	118
BAMC20-72963	72963A9	114-118
BAMC20-72963	76788A1	118
BAMC20-72963		124
BAMC20-76668	47877A4	119
BAMC20-76668	72964A1	119
BAMC20-76668	76668A1	119
BAMC20-76668	76668A3	114-119
BAMC20-76668		124
BAMC29-47587	47587	127
BAMC29-47587	47587A2	127
BAMC29-47587	861493A07	127
BAMC29-47587	861493A3	127
BAMC29-47587		129
BAMC29-59498	59498	129
BAMC29-59498	59498A1	129
BAMC29-60372	60372A1	129
BAMC29-60372	60372A2	129
BAMC29-60372	861493A07	129
BAMC29-62898	62898	129
BAMC29-62898	62898A1	129
BAMC29-63588	889333	128
BAMC29-63588	63588A1	128
BAMC29-63588		129
BAMC29-78985	78985A1	128-129
BAMC47-27-39923	27-39923	93-123
BRA125-1/2x1/2		147
BRA125-1/2x3/4		147
BRA125-1/2x3/8		147
BRA125-1/4x1/2		147
BRA125-1x3/4		147
BRA125-3/16x1/4		147
BRA125-3/4x1/2		147
BRA125-3/4x3/4		147
BRA125-3/8x1/2		147
BRA125-3/8x3/8		147
BRA125-5/16x3/8		147
BRA125-5/8x1/2		147
BRA125-5/8x3/4		147
BRA125-5/8x3/8		147
BS2142	88-11178A01	139
BS2143	88-93582	139
BS5138		139
BS5139		139
BS5140		139
BS5141		139
BS5142		139
BS5143		139
BS5291		139
BS5292		139
BS5293		139
BS5294		139
BS5295		139
BS5296		139
BS5297		139
BS5298		139
BS5299		139
CARP74021		218
CEF500106GT		175
CEF500109		175
CEF500159G		175
CEF500161		175
CEF500167		175
CEF500177GT		175
CEF500183G		175
CEF500301		175
CEF500313G	47-89984T4	175
CEF500507K	32-44348	125
CEF500507K	32-44348001	125
CEF500507K	32-44348T	125
CEF500508K	32-14358	125
CEF500508K	32-14358001	125
CEF500508K	32-14358T	125
CEF500509K	86840A05	195
CEF500509K	86840A3	195
CEF500509K	8M0062406	195
CEF500511K	32-90949T	125
CEF500512K	32734	195
CEF500512K	18654A1	195
CEF500512K	32734A3	195
CEF500513K	74639Q02	195
CEF500515K	816431A1	195
CEF500516K	60932A1	195
CEF500516K	60932A4	195
CEF500520K	78458	195
CEF500520K	78458A1	195
CEF500522K	36223	195
CEF500522K	36223A1	195
CEF500522K	36223A2	195
CEF500523	70981A3	125
CEF500524	53114	125
CEF500524	53114A1	125
CEF500532K	32-807458T	125
CM31640	31640A4	182
CM31640	31640Q4	155-157
CM31640		249
CM31640A	31640A4	182-155-157
CM34127	34127T2	182-249
CM34127A	34127T2	182
CM34762	34762A1	182
CM34762A	34762A1	182
CM43994	43994A2	183
CM43994	821631A1	183
CM43994		249
CM46399	46399A1	182
CM46399	822777Q1	182
CM46399		249
CM46399A	46399A1	182
CM46399A	822777Q1	182
CM55989	55989A9	182
CM55989	55989Q9	184
CM55989A	55989A9	182-184
CM762144	76214-4	182
CM762144	76214A2	169
CM762144	76214Q5	171
CM762144		249
CM762144A	76214-4	182
CM762144A	76214A2	169
CM762144A	76214Q5	171
CM762145	76214A2	182
CM762145	76214Q5	163-167-182
CM762145		249
CM762145A	76214A2	182
CM762145A	76214Q5	163-182
CM762145A	76514Q5	167
CM76214Q5	76214Q5	182-249
CM806105	806105Q1	156-162
CM806105	806188A1	182
CM806105		249
CM806105A	806105Q1	156-162
CM806105A	806188A1	182
CM806188	806188A1	166-168-170-182-249
CM806188A	806188A1	166-168-170-182-280
CM806189	806189Q1	182-199-249
CM806189A	806189Q1	182-199
CM806190	806190A1	200
CM806190	806190Q1	182
CM806190		249
CM806190A	806190A1	200
CM806190A	806190Q1	182
CM821629	821629Q1	159-161-182-249
CM821629A	821629Q1	159-161-182
CM821630	821630A1	165-182-249
CM821630	821630Q1	165-182-249
CM821630A	821630A1	165-182
CM821630A	821630Q1	165-182
CM821631	43994A2	183
CM821631	821631Q	190
CM821631	821631Q1	185
CM821631		249
CM821631A	43994A2	183
CM821631A	821631Q	190
CM821631A	821631Q1	185
CM865182CA		183
CM865182CZ		183-249
CMALPHAGEN1KITA	888756Q02	154-156-183-248-249
CMALPHAGEN1KITM	888756Q02	154-156-183-249
CMALPHAKITA	888756Q01	183
CMALPHAKITA	888756Q03	183
CMALPHAKITA		158-160-162-248-249
CMALPHAKITM	888756Q01	183
CMALPHAKITM	888756Q03	183
CMALPHAKITM		158-160-162-249
CMBRAVO1KITA	888758Q01	166-183-249
CMBRAVO1KITM	888758Q01	166-183-249
CMBRAVO2Y3KITA	888761Q01	168-183-249
CMBRAVO2Y3KITM	888761Q01	168-183-249
CMBRAVO3KITA	888761Q02	170-183-248-249
CMBRAVO3KITM	888761Q02	170-183-249
CMC		183
CMCC		183
CMPNAA		183
CMPNAZ		183
CMPNBA		183
CMPNBZ		183
CMPNCA		183
CMPNCF16A		183
CMPNCZF16Z		183
CMPNDA		183
CMPNDAF14UNS		170-183
CMPNDAF14UNSA		170-183
CMPNDZ		183
CMPNEZF14A		183
CMX-1	85538	182
CMX-1	823341	182
CMX-1A	85538	182
CMX-1A	823341	182
CHARJ12YC		232
CHARN5C		232
CHARS12PYP		233
CHARS12YC		232-233
CHARV15YC4		232-233
CHARV9IMC		232-233
CHAV63C		233
FED7205M	23-853849	92
FEDV-1984	44182A1	92
FEDV-3929	75416	92
FEL17000		74-75
FEL17010		77
FEL17019		76
FEL17020		79
FEL17030		81
FEL17040		84
FEL17042		84
FEL17046		84
FEL17048		87
FEL17049		84-87
FEL17060		78-83
FEL17069		76
FEL17100		74-75
FEL17102		75
FEL17110		77
FEL17115		77
FEL17116		77
FEL17119		76
FEL17120		80-81
FEL17124		81
FEL17125		79-81
FEL17140		86-88
FEL17145		86-88
FEL17146		86-88
FEL17160		78
FEL17165		83
FEL17200		74-75
FEL17201		85
FEL17205		85
FEL17207		88

REF.	R.O. /OEM	PAG
FEL17210		77
FEL17211		77
FEL17214		81
FEL17219		76
FEL17220		79
FEL17224		79
FEL17230		81
FEL17232		81
FEL17240		84
FEL17241		84
FEL17242		85
FEL17243		85
FEL17246		85
FEL17248		87
FEL17249		87
FEL17260		78-83
FEL17280		85
FEL17281		87
FEL17300	27-52546	75-93-124
FEL17301	27-53354	75-95-124
FEL17304	27-815528	75-98-124
FEL17310		77
FEL17319	27-46401	76-100-124
FEL17320		80-82
FEL17340		86-88
FEL17341		86-88
FEL17342		86
FEL17360		79-83
FEL17410	27-99757	78-101-103-105-124
FEL17420	27-33395	80-82-107-109-111-125
FEL17440	27-46820	86-113-125
FEL17460	27-73866	83-79-125
FEL17725		80-82-91
FEL17740	26-75980	86-88-91
FEL17900		75-76
FEL17903		75-76
FEL17920		78
FEL17921		78
FEL17925		76
FEL17926		76
FEL17930		80-82
FEL17931		80-82
FEL17935		87-89
FEL17937		87-89
FEL17945		79-83
FEL17950		75
FEL17970		78
FEL17971		78
FEL17975		76
FEL17980		80-82
FEL17981		80-82
FEL17982		80-82
FEL17983		80-82
FEL17995		79
FEL17996		83
FELBS40013	26-814622	91
GLM51235		111
GS30430		147
GS30431		147
GS30432		147
GS30433		147
GS31001		142
GS31065		141
GS31066		141
GS31067		141
GS31102		142
GS31155		141-147
GS31156		141-147
GS31157		141
GS31166		141-147
GS38105	814263A1	193
GS38122	35852	193
GS38310	54-815504456	105-107
GS38320	54-815504256	97-98-103-111-113
GS38320	54-815504272	107
GS38320	54-815504372	97
GS38320	54-815504456	105
GS38322	54-815504372	97-101-103-111-113
GS90002		248
GS90012		248
GS90019		248
GS90090		248
GS90092		248
HGE4870	73813A1	93-95-97-100-109-114-115-123
HGE4929	864929A3	105-107-121
HGE6219-A	816219A5	99-116-124
HGE6351	76351A04	115
HOT20560-MK		115
HOT20591	864591T02	105-118
HOT20735	864308T01	117
HOT20735	865049T01	117
HOT20735	865735A02	107-117
HOT20735		121-122-125
HOT20905	90880A2	99-119-123
HOT20905-MK		99
HOT20908	807476A6	121
HOT20908	93320A13	103-111-112-121

REF.	R.O. /OEM	PAG
HOT20908	93320A5	121
HOT20937	98562A6	99-119-123
HOT20937-MK		99
HOT20950	77234A2	117
HOT20950	77234A7	109-117
HOT20950		123-125
HOT20951	77235A2	117
HOT20951	77235A8	109-117
HOT20951	864591T02	107
HOT20951		123-125
HOT20952	99746A17	101-103-117
HOT20952	99746A3	117
HOT20952	99746A8	117
HOT20952-MK		102
HOT20953	860246A10	117
HOT20953	860246A15	111-117
HOT20953	860246A3	117
HOT20953	860246A9	117
HOT20953	87114A19	117
HOT20956	806235A04	116
HOT20956	806867A8	116
HOT20956	806867A8	116
HOT20956	860235A04	97
HOT20956	860235A04	97-116
HOT20956	99798A18	116
HOT20956	99798A18	116
HOT20956		121-123-124
HOT20956-MK		96
HOT20957	807078A6	117
HOT20957	807078T09	117
HOT20957	807078T10	113-117
HOT20957	89011A8	117
HOT20957-MK		113
HOT20958	65604A12	115-118
HOT20958	65604A4	118
HOT20958		123-125
HOT20962	65603A12	115-118
HOT20962	65603A3	118-123-125
HOT20966	806867A12	118
HOT20966	806867A3	118
HOT20966	860235A03	98-118
HOT20966-MK		98
HOT20970	98504A3	103-111-113-118
HOT20971	60426A1	119
HOT20971	76351A04	95-100-109-115-119
HOT20971	76351A2	119
HOT20971		123
HOT20975	12076A2	97-98-119
HOT20975-MK		96-98
HOT20976	44354A3	118
HOT20976	807914A1	118
HOT20976	807988A03	101-103-113-118
HOT20976	807988A2	118
HOT20976	867988A08	111
HOT20976-MK		102-111-113
HOT20978	76771A2	95-109-115
HOT20985	93322A12	122
HOT20985	93322A12	122
HOT20985	93322A12AV	103-111-112
HOT20985	93322A12AV	103-111-112
HOT26371-MK		94-100-109-115
HOT27214-MK		109-111
HOT28503-MK		102-110-113
JAB17018-0001		175
JOH09-1028B		175
LENS3213	35-809097	141
LENS3227	35-886638	141
LENS3240		141
LUB11404		248
LUB11564U12		249
LUB11578U12		138
MAG15-602	84-813720A8	234
MAG15-602	84-816761Q8	234
MAG15-803	84-816761A15	234
MAG15-803	84-816761A2	234
MAG15-803	84-816761A6	234
MAG15-803	84-816781A15	234
MAG15-809		234
MAR076	12076A2	97-98-119-123
MAR078	807078A6	117
MAR078	807078T09	117
MAR078	807078T10	113-117
MAR078	89011A8	117
MAR078		121-122-125
MAR246	860246A10	117
MAR246	860246A15	111-117
MAR246	860246A3	117
MAR246	860246A9	117
MAR246	87114A19	117
MAR246		121-122-125
MAR309	864309T01	118
MAR309	864309T02	105
MAR309	864309T02	107-118
MAR309		124
MAR3320PAR	807476A6	121
MAR3320PAR	93320A13	103-111-112-121
MAR3320PAR	93320A5	121
MAR591	864591T02	105-107-118-124

REF.	R.O. /OEM	PAG
MAR612	864612T01	105-117-121-122-124
MAR735	864308T01	117
MAR735	865049T01	117
MAR735	865735A02	117
MAR746	99746A17	101-103-117
MAR746	99746A3	117
MAR746	99746A8	117
MAR746		121-122-124
MAR988	44354A3	118
MAR988	807914A1	118
MAR988	807988A03	101-103-113-118
MAR988	807988A08	111
MAR988	807988A2	118
MAR988		124
MP0180-000	10-812509184	135
MP0180-001		134
MP425024	824324	126
MP425024	824324T	126
MP425036	824330	126
MP425036	824330T	126
MP425036	824330T1	126
MP425113	59974	126
MP425113	811575	126
MP425113	811575T	126
MP425149	72608	126
MP425149	72608T	126
MP426422		203
MP426434		203
MP426574		203
MP426766		203
NGKBPR5EFS-13		233-246
NGKBPR6EFS		233-245-246-247
NGKBPR6ES		248
NGKBR6EF		233
NGKBR6ES		233
NGKBR6FIX		233
NGKBR6FS		233-245-246-247
NGKBR6FVX		248
NGKITR4A15		233-246
NGKIZFR7M		233-248
NGKTR5		233
NGKTR55		233
NGKTR55IX		233-248
NGKTR6IX		233-245-246-247
NGKYR5		233
NGKYR5IX		233
OSC7214-MK		109-111
PH140-0004	50-12782	134
PH140-0004	50-56886	134
PH140-0004	50-69865A1	134
PH140-0013	50-806965A4	135
PH140-0013	50-99417A2	135
PH140-0015	50-864340A2	134
PH140-0015	50-99418A2	134
PH140-0017-D	50-863007A1	134
PH140-0017-HT	50-864340A2	134
PH140-0020	50-806963A2	134
PH140-0020	50-806965A4	134
PH140-0020	50-863007A1	134
PH140-0020-D	50-806965A2	134
PH140-0020-D	50-806965A4	134
PH140-0020-D	50-812429A2	134
PH140-0020-D	50-8M0090697	134
PH140-0022	50-47454	135
PH140-0022	50-65785A1	135
PH140-0022	50-72550A2	135
PH140-0022	50-79604A3	135
PH140-0022-CCW	50-808011A05	135
PH140-0022-CCW	50-80811A4	135
PH140-0022-CCW	50-88671A1	135
PH150-0008	50-805991	135
PH200-T015	17649	137
PH200-T015	17649T	137
PH200-T015	891736T	137
PH200-T016	14336A20	137
PH200-T016	14336A8	137
PH200-T016	865380A13	137
PH200-T016	865380A25	137
PH200-T016	88183A12	137
PH200-T016-SK	14336A9	137
PH200-T016-SK	414336A6	137
PH200-T016-SK	88183A12	137
PH200-T064-1B	18525A1	138
PH200-T066	42419A1	138
PH200-T066	862548A1	138
PH200-T066-K	865380A13	138
PH200-WH01		137
PH300-0010	12449	136
PH300-0010	19685	136
PH300-0010	98555	136
PH300-0010	817119	136
PH300-0010	817119A1	136
PH300-0010	817119A4	136
PH300-0011	807652	136
PH300-0011	807652T	136
PH300-0012	807653	136
PH300-0012	807653T	136

REF.	R.O. /OEM	PAG
PH300-0013	56045	136
PH300-0013	59755	136
PH300-0013	69729	136
PH300-0013	78403A2	136
PH300-0016	805884	136
PH300-0016	805447T	136
PH300-0016	805884T	136
PH300-0022	78402	136
PH300-0022	78403A1	136
PH300-0022	78403A2	136
PH300-0022	817119A4	136
PH300-0022	92497A3	136
PH300-0030	834832	137
PH300-0030	834832T2	137
PH300-0030	857006A3	137
PH300-0033	862030T	136
PH300-0033	862030T01	136
PH300-0034	862031	136
PH300-0034	862031T	136
PH300-0034	862031T1	136
PH300-0035	863077T	137
PH300-0035	86307AR01	137
PH365-0003	88-79023T10	139
PH365-0006		135
PH375-0001	13037	139
PH375-0001	8733261	139
PH375-0004	89-18080	139
PH375-0004	89-853654A1	139
PH375-0004	89-99253	139
PH375-0004		134-135
PH375-0005		134
PH375-0008	809463A1	139
PH375-0009		134
PH375-0011	25661	138
PH375-0011	25661T1	138
PH375-0027	87-76416A1	138
PH375-0028	89-68258A4	138
PH375-0028	89-853654A1	138
PH375-0031	65057A1	138
PH375-0031	65057T1	138
PH375-0034	89-818997A1	138
PH375-0034	89-818997T1	138
PH375-0036	89-805188A1	138
PH375-0036	89-818999A1	138
PH375-0036	89-818999A2	138
PH600-0002	8504541	132-133
PH600-0003	883925	132
PH600-0003	8M0113736	132
PH600-0004	884727	132
PH600-0004	8M0113733	132
PH600-0004		133
PH600-0005	8503991	132
PH600-0005	8M0113734	132
PH600-0005		133
PH600-0006	883885	132-133
PHSEL-239	89-96158	138
PHSEL-239	89-96158T	138
RAC1/2F-1/2M		147
RAC1/2x16		148
RAC1/2X18		148
RAC1/2X20		148
RAC1000MA30		144
RAC110A		145
RAC120AS		145
RAC120R-RAC-01		141
RAC1606B		148
RAC2010PM-OR		144
RAC2010SM-OR		144
RAC2010TM-OR		144
RAC2020PM-OR		144
RAC2020SM-OR		144
RAC2020TM-OR		144
RAC2040PM-OR		144
RAC2040SM-OR		144
RAC2040TM-OR		144
RAC230R2		145
RAC245R2		145-146
RAC3/8F-3/8M		147
RAC3/8X10		148
RAC3/8X12		148
RAC3/8X14		148
RAC31871	35-884380T	142
RAC31871	35-8M0020349	142
RAC31871	35-8M0060041	142
RAC31871		246
RAC320R-INOX-01		141
RAC320R-RAC-01		141
RAC320R-RAC-02	35-802893Q4	140-141
RAC460R2		145
RAC490R2		145
RAC500MA30		144
RAC75/1000MA30		144
RAC75/500MAX		144
RAC900MA30		144
RAC913-O10-H10		147
RAC913-O10-H8		147
RAC913-O8-H6		147
RAC913-O8-H8		147

REF.	R.O. /OEM	PAG
RACPFF5510	35-802893Q01	140
RACR11T		145
RACR12P		145
RACR12S		145
RACR12T		145
RACR20P		145
RACR20S		145
RACR20T		145
RACR24P		145
RACR24S		145
RACR24T		145
RACR25P		145
RACR25S		145-146
RACR25T		145-146
RACR26P		145
RACR26S		145
RACR26T		145
RACR60P		145
RACR60S		145
RACR60T		145
RACR90P		145
RACR90S		145
RACR90T		145
RACRK19492UL		148
RACRK20726		148
RACS3213	35-809097	141
RACS3214	35-809099	141
RACS3220UL	35-809101	140-141
RACS3227	35-886638	141
RACS3228UL		141
RACS3240		141
REC016940	879194241	146
REC016940	35-815419	146
REC016940		247-248
REC02644	43433 + 43436 + 10-20518	186-196
REC0307239	25-33504	90-189
REC0554545	25-47632	90
REC10-20518	10-20518	186-196
REC10-28668	10-28636	185
REC10-28668	10-28668	153-161
REC10-28668	10-28688	159
REC10-30206	10-30206	149-155-157
REC10-30720	10-30720	155
REC10-31700	10-31700	186-196
REC10-32470	10-32470	155-157
REC10-34354	10-34354	97
REC10-35386	10-35386	95-109-114-115
REC10-37562	10-37562	100
REC10-37612	10-37612	113-114-115
REC10-43749	10-43749	103-105-107-111-113
REC10-45590	10-45590	189-196
REC10-53728	10-53728	97-98-103-105-107-111
REC10-66686	10-66686	229
REC10-668631	10-668631	97-98
REC10-72094	10-72094	97
REC10-73657	10-73657	99
REC10-76156	10-76156	155-157
REC10-79953Q04	10-79953Q04	153-159-161-249
REC10-806290	10-806290	199-200
REC10-806327	10-806327	163-167-169-171
REC10-816601	10-816601	150-159-161-171
REC10-816928	10-816928	163
REC10-85486	10-85486	198-199-200
REC10-861788	10-861788	135
REC10-865982005	10-865982005	103-111-113
REC10-86801	10-86801	187-192
REC10-90926	10-90926	229
REC10-96411	10-96411	156
REC10-97934	10-97934	194
REC10-97934A1	10-97934A1	186-194
REC10-98794	10-98794	105-107-153-159-161
REC11-13436	11-13436	155-157
REC11-22339	11-22339	153-159-161-165
REC11-34933	11-134391	149-189
REC11-34933	11-34933	149-185-190
REC11-34933	11-859116	149-153-155-157-171-191-198-200
REC11-35921	11-35921	155-157-163
REC11-52707Q1	11-52707Q1	154-156-162-166-168
REC11-52707Q1	11-827614	169
REC11-8267089	11-8267089	155-156-190
REC11-859124	11-859124	155-157
REC11-859135	859135	159
REC11-859135	11-859135	161
REC11-859135		150
REC11-862902	11-862902	95-97
REC11-862903	82671013	197
REC11-862903	11-134371	187
REC11-863332	11-863332	194
REC1140639		146
REC12-18448	12-18448	163
REC12-191833	12-19183-3	171
REC12-191833	12-191833	153-155-157-159-161-163-165-167-169-248

REF.	R.O. /OEM	PAG
REC12-20084	12-20084	95-97-98-179
REC12-27880	12-27880	155-157
REC12-29245	12-29245	155-157
REC12-31211Q03	12-31211A2	163
REC12-31211Q03	12-31211Q03	155-157-167-169
REC12-31266	12-31266	155-157
REC12-32666	12-32666	153-189
REC12-32834	12-32834	194
REC12-35777	12-35777	194
REC12-39116	12-39116	189
REC12-44163	12-44163	198-200
REC12-44164	12-44164	200
REC12-45176	12-35935	159-161-189-191
REC12-45176	12-45176	150-171
REC12-45810	12-45810	153-159-161
REC12-46765	12-46765	197
REC12-72498	12-72498	189
REC12-815472	12-815472	186
REC12-815952	12-815952	199
REC12-835467Q01	13171	169
REC12-835467Q01	12-835467Q01	155-157-163-167
REC12-85058	12-85058	198
REC12-90931	12-90931	229
REC120		146
REC12110		154-176
REC12120	46-96148A8	156-176
REC125017	25-23145	90
REC12632A7	12632A7	194
REC12644A1	12644A1	195
REC12708	12708	165
REC12711	12711	165-196
REC127695-35150	35-19485	146
REC12784	12784	165
REC13-33734	13-33734	194
REC13-35048	13-35048	97-99-103-105-107-109-111-113-114-115-165
REC13-39107	13-39107	99
REC13-423511	13-42351-1	155-167
REC13-423511	13-423511	157-163-169
REC13220	13220	207-210
REC1347-816373A4	1347-6492A1	204
REC1347-816373A4	1347-7362A1	204
REC1347-816373A4	1347-804624R02	204
REC1347-816373A4	1347-816373A4	204
REC1347-816373A4	1347-8292A4	204
REC1347-816373A4	1347-9415T	204
REC1347-816373A4	1347-9662A4	204
REC1347-816373A4	3310-804624R1	204
REC1347-816373A4		208
REC1347-818619R02	1336-3594A1	203
REC1347-818619R02	1347-818619	203
REC1347-818619R02	1347-8186191	203
REC1347-818619R02	1347-818619R02	203
REC1347-818619R02	1351-4263A1	203
REC1347-818619R02	1351-4263A2	203
REC1347-818619R02	1351-4263A3	203
REC1347-818619R02	1351-5202A1	203
REC1347-818619R02	1351-6065A2	203
REC1347-818619R02	1351-7354A1	203
REC1347-818619R02		208
REC1347-9661A3	1347-7361A1	202
REC1347-9661A3	1347-7364A1	202
REC1347-9661A3	1347-8296A4	202
REC1347-9661A3	1347-9661A3	202
REC1347-9661A3		208
REC1348-818621R02	1347-8186211	202
REC1348-818621R02	1347-818621R02	202
REC1348-818621R02	1348-818621	202
REC1348-818621R02	1348-818621R02	202
REC1348-818621R02	1351-8480A2	202
REC1348-818621R02		208
REC13524A1	13524A1	223
REC13524A1	13524A5	223
REC13524A1	13524T1	223-229
REC13524A6	13524A4	223
REC13524A6	13524A6	223
REC13524A6	13524Q06	223-229
REC13524A6	19405A4	223
REC13524A6	90576A4	223
REC1376-818622R02	1347-818622	202
REC1376-818622R02	1347-8186221	202
REC1376-818622R02	1376-5659A1	202
REC1376-818622R02	1376-5744A1	202
REC1376-818622R02	1376-6152A1	202
REC1376-818622R02	1376-818622R02	202
REC1376-818622R02		208
REC1396-4148	1396-4148	210
REC1396-4656	1396-4656	207-209
REC1396-5238	1396-5222	207
REC1396-5238	1396-5238	207
REC1396-5238		225
REC13960		97
REC1397-2060	1397-2060	205-208-209
REC1397-2150	1397-2150	142
REC1397-2610	1397-2610	205
REC1397-3327	1397-3327	205
REC1397-3327	1397-8546	205

REF.	R.O. /OEM	PAG
REC1397-3327	1397-8959	205
REC1397-3327		208-209-210
REC1397-3458	1397-3458	206
REC1397-5831	1397-5831	207-209
REC1397-6367A1	1397-6367A1	206
REC1397-8582	1397-8582	210
REC1397-8760	1397-5830	206
REC1397-8760	1397-7099	206
REC1397-8760	1397-8760	206
REC1397-8760		208
REC1397-8767Q	1397-8545	142
REC1397-8767Q	1397-8767	142
REC1397-8767Q	1397-8767Q	142
REC1398-3089	1346-2770	206
REC1398-3089	1398-3089	206
REC13980	22-806608A1	95-97-98
REC14-18323	14-18323	157-163-167-169
REC14-44166T1	17-44166T1	200
REC14-79447	14-79447	155
REC14034A3	14034A3	198
REC14035A3	14035A3	198
REC14505A2	14505A2	194
REC14587A7	14587A5	157-163
REC1463-9382	38547	231
REC1463-9382	32193A2	231
REC1463-9382	392-806529A1	231
REC1463-9382	898253T24	231
REC15-32563A1	15-32563A1	153-159-161
REC15-35980A1	15-35980A1	153-159-161
REC15-36178A02	15-36178A02	153-159-161
REC15-401	84-813720A5	234
REC15-402	84-813720A5	234
REC15-405	84-813720A13	234
REC15-405	84-816761Q13	227
REC15-42637A1	15-42637A1	157-163
REC15-44491A1	15-44491A1	163
REC15-45691A1	15-45691A1	153-159
REC15-47397A1	15-47397A1	155-157-163
REC15-57007A1	15-57007A1	155
REC15-601	84-813720A11	234
REC15-601	84-816761Q16	227-229
REC15-604	84-813720A7	234
REC15-604	84-816761Q7	234
REC15-606	84-863656A2	228-234
REC15-71013	15-71013	153-159-161
REC15-801	84-813720A10	234
REC15-801	84-813720A8	234
REC15-801	84-813720A9	234
REC15-804	84-813720A2	234
REC15-804	84-813720A3	234
REC15-804	84-813720A4	234
REC15-804	84-816761A15	234
REC15-804	84-816761A17	234
REC15-804	84-816761A2	234
REC15-804	84-816761A4	234
REC15-804	84-816761A6	234
REC15-804	84-816761A8	234
REC15-804	84-816761Q17	227-229
REC15-804	84-8167681A17	234
REC15-804	84-816781A15	234
REC15-804	84-816781A4	234
REC15-804	84-816878A17	234
REC15-804	84-818781A4	234
REC15-808		234
REC15-813	84-863656A1	228-234
REC15-815	84-816608A1	228-234
REC15-86749A1	15-86749A1	167-169-171
REC15-92914A1	15-92914A1	167-169
REC15000K	3349198	175
REC15000K	3916720	175
REC15000K	47-853126	175
REC1547-815930A7	1547-815930A7	151-159
REC1547-861063A10	1547-861063A10	150-151
REC1547-861063A12	1547-861063A12	150-151
REC1547-861063A6	1547-861063A6	150-151
REC1547-861063A8	1547-861063A8	150-151
REC1547-9412A20	1547-9412A20	149
REC1547-9412A21	1547-9412A21	149
REC1547-9412A22	1547-9412A22	149
REC1547-9412A23	1547-9412A23	149
REC15995	15995	99
REC16-49545	16-49545	95-100-103-109-111-113-114-115
REC16-56826	16-56826	97
REC16-59579	16-59579	189-191
REC16-70236	16-70236	95-97
REC16-806300	16-806300	98
REC16-97520	16-97520	109
REC1623-5356A4	1623-5356A4	150-154
REC1623-815822A30	1623-815822A30	151-163
REC1623-815822A30	1623-815822A36	151
REC1623-815822A47	1623-815822A47	150-151
REC1623-815822A53	1623-815822A32	150-151
REC1623-815822A53	1623-815822A43	150-151
REC1623-815822A53	1623-815822A53	150-151
REC1623-815822A53	1623-815823A5	150-151
REC1623-815822A55	1623-815822A45	150-151
REC1623-815822A55	1623-815822A55	150-151

REF.	R.O. /OEM	PAG
REC1623-8951A33	1623-8951A33	149-150
REC1623-8951A37	1623-8951A37	150-156
REC1623-8951A43	1623-8951A43	149-150
REC1656-8866A55	1656-8866A10	149-167
REC1656-8866A55	1656-8866A55	149-167
REC1656-8866A63	1656-8866A15	149
REC1656-8866A63	1656-8866A63	149-167
REC16755Q1	16755Q1	164-191-193-248-249
REC16792A39	16792A39	186
REC17-14872A1	17-14872A1	198-209
REC17-14873A1	17-14873A1	198
REC17-44166	17-44166	200
REC17-44167A1	17-44167A1	200
REC17-47617	17-47617	229
REC17-815953A01	17-815953A01	199
REC17-8M0065070		199-209
REC17-8M0084681	8M0020941	155-157-163
REC17177A1	13447A1	230
REC17177A1	17177A1	230
REC17177A1	68521A3	230
REC17177A1	68521A4	230
REC17177A1	74905A3	230
REC17177A1	816148A1	230
REC17177A1	91823A3	230
REC17494A1	17494A1	130
REC18-32665	18-32665	153-189
REC18-5953	42785	137
REC18-8114		205
REC18-8115		205
REC18-8549		94
REC18643A7	18643A7	194
REC18654A1	32734	195
REC18654A1	18654A1	189-191-195
REC18654A1	32734A3	195
REC18654A1		248-249
REC19-14842	19-14842	198-200
REC19-42682	19-42682	153
REC19-47579	19-47579	153
REC19-59504	19-59504	179
REC19-815951	19-815951	199
REC19-864689	19-864689	105-107
REC195141	33266	230
REC195141	52352	230
REC195141	58231	230
REC195141	62424	230
REC195141	87581	230
REC195141	195141	230
REC195141	87581T	230
REC21-20553	21-20553	95-97-98
REC21310		197
REC21370	17-14873A1	198
REC21380	17-14872A1	198
REC21390		197
REC21470		193
REC21622232	879150A87	228-230
REC21622232	884794A02	230
REC21622232	884794A1	230
REC21811		194
REC21920		200
REC21990		197
REC22-328022	22-328022	97-103-111-113-114-115
REC22-32803	22-32803	98-99
REC22-36382	22-36382	95-97-103-111-113
REC22-384071	22-384071	111
REC22-41622	22-41622	97-103-109-111-113-114
REC22-428611	22-428611	99-103-105-107-111-113-153-190
REC22-67892A05	22-67892	169
REC22-67892A05	22-8M0058389	171
REC22-67892A05	8M0058389	155-157-163-165-167-249
REC22-73379	10-74727	99
REC22-73379	22-73379	103-105-107-111-113-185
REC22-76170	22-76170	99
REC22-861150T02	22-861150A1	189-191-244
REC22-861150T02	22-861150A2	244
REC22-861150T02	22-861150T02	244
REC22-866725	22-866725	97-99-105-107-109-111-113-114-115
REC22-88847A1	22-88847A1	184-190
REC22-98477A2	22-98477A2	129
REC23-29804T	23-29804T	155-157
REC23-30617A2	23-30617A2	155-157
REC23-32632	23-32632	153
REC23-67370	23-67370	163
REC23-805041A2	23-805041A2	188-196
REC23-806036A1	23-806036A1	188-196
REC23-806922	23-806922	128-129
REC23-807073	23-807073	200
REC23-815921A21	23-815921A21	163
REC23-8159501	23-8159501	199
REC23-816583	23-816583	150-163
REC23-824108	23-824108	157-163
REC23-847637	23-847637	187-192
REC23-853853002	23-853853002	92
REC23-853855001	23-853855001	92

REF.	R.O. /OEM	PAG
REC23-861209A1	23-861209A1	164-165-191-196
REC23-89574	23-89574	197
REC23-8M8000506	92916	169
REC23-8M8000506	23-92916	167-171
REC23-90915	23-90915	229
REC23-99291	23-99291T	198
REC23-99299	23-99299	194
REC23-99322	23-99322	186-194
REC24-17997A1	24-17997A1	159-161-165
REC24-30893	24-30893	157-163
REC24-34576	24-34576	157
REC24-56159	24-75411T	92
REC24942	35-802893Q01	140
REC24950	35-60494A4	140
REC24952		140
REC25-16524	25-16524	90
REC25-16524	25-20415	90
REC25-20081	25-20081	90
REC25-21836	25-21836	90-163
REC25-25439	25-25439	90-153-155-157-159-161
REC25-29845	25-29845	165
REC25-30224	25-30224	129
REC25-30224	25-30224Q	90
REC25-30271	25-30271	155-157
REC25-30529	25-30529	90
REC25-30613	25-30613	90-155-157
REC25-31534	25-31534	155-157-163-167-169
REC25-32546	25-32546	90-153-159-161
REC25-33145	25-33145	90-155
REC25-33465	25-33465	90-167-171-179
REC25-33465	25-54029	90
REC25-33465	25-822370	167-169
REC25-35027	25-35027	159-161-165
REC25-35029	25-35029	90
REC25-36318	25-36318	163
REC25-38099	25-38099	90-157
REC25-38101	25-38101	90
REC25-38933	25-38933	90
REC25-457101	25-457101	90-165
REC25-48171	25-48171	90-191
REC25-55801	25-55801	90-153
REC25-60342A2	25-60342A2	197
REC25-62700	25-62700	90
REC25-62705	25-62705	90-165-191
REC25-62706	25-62706	165
REC25-62706	25-62707	90
REC25-67202	25-67202	90
REC25-70937	25-70937	90-153-159-161
REC25-80863	25-20863	90
REC25-823683	25-823683	90
REC25-87400A2	25-87400A2	199-200
REC25-89497	25-89497	90
REC25-90011	25-90011	90-157-163
REC25-94288	25-94288	179
REC25-97387	25-97387	90-165
REC25000	89876A3	140
REC25010		140
REC25020		140
REC25030		140
REC26-12224	26-12224	90-155-157-163
REC26-12709	26-12709	90
REC26-12709	26-127091	165
REC26-14240	26-14240	90-91
REC26-14756	26-14756	91
REC26-16709A2	26-16709A2	164
REC26-16977	26-16977	90-155-157
REC26-16977	26-6977	90
REC26-23517	26-23517	90
REC26-24590	26-24590	90
REC26-24590	26-31249	90
REC26-24590	26-892361	90
REC26-30530	26-30530	90
REC26-30913	26-30913	90
REC26-32511	26-32511	90-153
REC26-32511A1	26-32511A1	152
REC26-32911	26-32911	90
REC26-33144A2	26-33144A2	154-156
REC26-33467	26-33467	90
REC26-34217	26-34217	90
REC26-36556	26-36556	167-169
REC26-36557	26-36557	153
REC26-38970	26-38970	155-156
REC26-419533	26-41953	90
REC26-43035	26-43035	90
REC26-43036	26-43036	90
REC26-43993	26-43993	90
REC26-455771	26-45577 1	90-157
REC26-455771	26-45577-1	163-171-248
REC26-455771	26-455771	155-167-169
REC26-45587	26-45587	90
REC26-48443	26-48443	90
REC26-54925	26-54925	185
REC26-55682	26-55682	90-185
REC26-56397	26-56397	90
REC26-56788	26-56788	90
REC26-62818	26-62818	90

REF.	R.O. /OEM	PAG
REC26-66302	26-66302	90-159-161-163
REC26-67388	26-67388	90-91-92
REC26-69188	26-69188	90
REC26-69189	26-69189	90
REC26-70081	26-70081	90
REC26-72785	26-72785	90-179
REC26-75624	26-75413	91
REC26-75624	26-75624	91-92
REC26-75988	26-75988	90
REC26-76868	26-14077	90-163
REC26-76868	26-76868	90-155-157-167-169
REC26-76868A04	26-76868A04	166-168-170
REC26-79831	26-79831	90
REC26-805344	26-805344	167-169-171
REC26-807006	26-807006	90-165
REC26-811554	26-811554	91
REC26-8164641	26-816464-1	163
REC26-8164641	26-8164641	90-155-157
REC26-816575A2	26-816575A2	163
REC26-816575A3	26-816575A3	162
REC26-821092	26-821092	90
REC26-8219471	26-8219471	91
REC26-823894	26-823894	90-153-159-161
REC26-861694	26-805080	90
REC26-861694	26-861694	171
REC26-864319	26-864319	161-163
REC26-88397	26-88397	159-161
REC26-88397A1	26-88397A1	158-160
REC26-88416	26-88416	185-190
REC26-89238	26-89238	90-155-157
REC26-897153	26-96063	90
REC26-8M0033407	26-8M0033407	171
REC26-8M2005029	26-416071	185-190
REC26-90562	26-90562	90-179
REC26-90925	26-90925	91-92
REC26-94038	26-94038	90
REC26-965031	26-965031	90-153
REC26900		226
REC26901		226
REC26902		226
REC26903		226
REC26904		226
REC27-12732	27-12732	206
REC27-13709	27-13709	93
REC27-142471		78
REC27-14250	27-14250	89
REC27-18272	27-18272	99-123
REC27-33179Q02	27-33179Q02	130
REC27-33395	27-33395	107-109-111-114-125
REC27-33918	27-8M2021920	130
REC27-33956	27-33956	133
REC27-34213	27-34213	219-220
REC27-344861	27-34486-3	229
REC27-34895A2	27-34895A2	89
REC27-34897	27-34897	133
REC27-34898	27-34898	220
REC27-35898T	27-35898T	93
REC27-39915	27-39915	93-123
REC27-39917	27-39917	93-123
REC27-41609	27-41609	206-208
REC27-418122	27-418122	130
REC27-41812Q	27-41812	130
REC27-41812Q	27-41812Q	130
REC27-42457	27-42457	220
REC27-426311	27-42631-1	157
REC27-430331	27-430331	163
REC27-43186A1	27-43186A1	92
REC27-46820	27-46820	113-114-125
REC27-47510Q	27-47510Q	129
REC27-475901	27-47590-1	130
REC27-47644-1	27-47644-1	184
REC27-48042	27-48042	114-124
REC27-480431	27-40431	115
REC27-480431	27-480431	95-100-109-114-123
REC27-48399	27-48399	205-209
REC27-48818Q01	27-48818Q01	130
REC27-49110	27-49110	133
REC27-49953	27-49953	89
REC27-524572	27-524572	206-208-209-210
REC27-52546	27-52546	93-124
REC27-53045Q01	53051	130
REC27-53045Q01	27-53045Q01	130
REC27-53354	27-53354	95-124
REC27-54014Q1	27-54014Q1	193-249
REC27-54506	27-54506	130
REC27-54529	27-54529	89
REC27-54529A1	27-54529A1	89
REC27-558101	27-55810 1	153
REC27-56108	27-56108	89
REC27-56880	27-56880	133
REC27-58764	27-58764	100-206
REC27-60208Q	27-60208	130
REC27-60715	27-60715	206-209
REC27-64692	27-64692	95-97-124-206-208-209
REC27-64818Q4	26-64818Q4	152
REC27-64818Q4	27-64718A1	152

REF.	R.O. /OEM	PAG
REC27-64818Q4	27-64818Q4	189-193
REC27-65577	27-65577	206
REC27-68714A6	27-68714	89-242-243
REC27-68715	27-68715	93-99-124
REC27-70142	27-70142	206-208
REC27-70905	27-70905	93
REC27-72805	27-72805	220
REC27-73666	27-73666	93
REC27-74830	27-74830	130
REC27-74830A3	27-74830A3	92
REC27-75450	27-75450	123
REC27-803192A2	24-803192A2	133
REC27-8052151	27-8052151	179
REC27-805396	27-805396	205
REC27-805760	27-805760	229
REC27-807218	27-807218	95-97-100-123
REC27-807473A1		80-82
REC27-8079821	8079821	206
REC27-8079821	27-70143	124
REC27-8079821	27-701431	124
REC27-8079821	27-807982	124
REC27-8079821	27-8079821	97-98-124-208-209-210
REC27-8146801	27-8146801	129
REC27-815528	27-815528	98-124
REC27-8172771	27-8172771	163
REC27-850456	27-85046	89
REC27-856081	27-856081	155-157
REC27-856704	27-856704	155
REC27-856705	27-856705	99-123
REC27-856705	27-97542	123
REC27-858524	27-858524	155-157
REC27-863724Q	27-41813	124
REC27-863724Q	27-860233	124
REC27-863724Q	27-863724	124
REC27-863724Q	27-863724Q	103-111-113-124
REC27-8637251	860231	124
REC27-8637251	863725	124
REC27-8637251	27-8637251	103-111-113-124
REC27-863726	27-818832	124
REC27-863726	27-860232	124
REC27-863726	27-863726	103-111-113-124
REC27-863726	27-871051	124
REC27-89656-1	27-89656-1	130
REC27-89656-1	27-896561	99
REC27-94914	27-94914	179
REC27-94996Q2	27-94996Q2	158-160-189-193-248-249
REC27-96429	27-96429	97-124
REC27-988231	27-988231	185-190
REC27-995061	27-995061	185
REC27-99757	27-99757	101-103-105-124
REC27-99777Q02	27-997771	123
REC27-99777Q02	27-997772	123
REC27-99777Q02	27-99777Q02	95-97-98-100-109-115-123
REC27-99960	27-99960	123
REC270	27-684547A02	105-107
REC270	27-864547A02	104-107-124
REC270	27-864549A02	124
REC270	27-864550A02	124
REC28-30281	28-30281	155-157
REC28-8M0032833	28-8M0032833	163
REC294005		227
REC30-72961	30-72961	179
REC30-879194A01	30-879194A01	184-185-190
REC30-879194A01	879194A01 & A02	190-249
REC30-88957T	30-88957T	155-157
REC30-88957T	30-88957T1	163
REC30-98475T1	30-98475T1	128
REC300-00879	392-7803A4	231
REC300-00879	392-805570A2	229-231
REC301967	25-36318	90
REC302035	25-48452	90
REC302537	25-33466	90
REC302588	25-26722	90
REC303347	25-26802	90
REC304174	25-32509	90
REC304454	13-69432	199-200
REC305123	25-33756	90
REC308627	25-20826	90-167-169-171
REC309731	25-29439	90
REC31-15842	31-15842	163
REC31-15844	31-15844	163
REC31-30894A1	31-30894A1	163
REC31-30894A5	31-30894A5	161
REC31-30895T	24-30893	155
REC31-30895T	31-30895T	155-157-163
REC31-32573A1	31-32573A1	153-159-161
REC31-32575T1	31-32575T1	153-159-161
REC31-33138A1	31-33138A1	163
REC31-35928T1	31-35928T1	155-157-163
REC31-35988A12	31-35988A12	153-159
REC31-35990A1	31-35990A1	153-159-161
REC31-36387A1	31-36387A1	157-163
REC31-53079A1	31-53079A1	155
REC31-54042T	31-54042T	167-169
REC31-61100A1	31-61100A1	153-159
REC31-66668A1	31-66668A1	169

REF.	R.O. /OEM	PAG
REC31-66668A1	31-99328A1	167-171
REC31-66668A1	66668A1	167
REC31-66818A1	31-66818A1	153
REC31-814653T	31-814653	163
REC31-815480	31-815480	163
REC31-815900	31-815900	165
REC31-828437A2	31-828437A2	157-163
REC31-828439A2	31-828439A2	163
REC31-86748A1	31-86748A1	167-169-171
REC31-86752A1	31-86752A1	167-169-171
REC31-86754T	31-86754T	167-169
REC31-86763A2	31-86763A2	165
REC31-86771	31-86771	165
REC31-87156	31-87156	165
REC31-92366A1	31-92366A1	155
REC310414	25-47254	90
REC310584	25-35276	90
REC310599	26-26226	90
REC313175	25-67202	90
REC313715	10-865321	171
REC32-14358001	32-14358	125
REC32-14358001	32-14358001	101-103-105-107-111-113-125
REC32-14358001	32-14358T	125
REC32-16012	32-16012	241-242
REC32-160211	32-16021 1	240-241-242
REC32-32461	32-32461	185-189-239
REC32-32461	32-32461A1	239-249
REC32-33189	32-33189	239-241-242-243
REC32-33220	32-33220	240
REC32-33220	32-3322070	240
REC32-33220	32-8M0062614	240
REC32-33220		241
REC32-4172533	32-4172533	185-189-239
REC32-4172533	32-8M0062309	239
REC32-4172533		249
REC32-43437	32-43437	190-239-249
REC32-44348001	32-44348	125
REC32-44348001	32-44348001	97-98-101-103-105-107-111-113-125
REC32-44348001	32-44348T	125
REC32-48132	32-48132	240-242-243
REC32-52481	32-52481	239-240-241-242
REC32-54236	32-54236	153
REC32-55816	32-55816	201
REC32-55816	33-55816	197
REC32-58432A2	32-58432A2	197-201
REC32-59841	32-59841	197-201
REC32-59842	32-59842	197-201
REC32-8066351	32-8066351	240-241-242-243
REC32-8066361	32-8066361	240-241-242-243
REC32-806856	32-806856	241-242-243
REC32-807407	32-807407	241
REC32-807458T	32-807458T	125
REC32-807661	32-807661	241-242
REC32-807697	32-807697	240-242-243
REC32-808033	32-808033	241
REC32-8080441	32-808044-1	239
REC32-8600891	32-8600891	240-243
REC32-860205	32-860205	239-242-243
REC32-860220	32-860220	159-161
REC32-86036	32-86036	197-201
REC32-86036	32-86036Q	201
REC32-861127	32-861127	198-199-200-201
REC32-861127	32-95858	201
REC32-861128	32-861128	198-199-200-201
REC32-861128	32-95859	201
REC32-862124	32-862124	241
REC32-862139	32-862139	240
REC32-864588	32-864588	198-200-201
REC32-864588	32-99903	201
REC32-864589	32-864589	198-200-201
REC32-864589	32-99902	201
REC32-864959	32-864959	198-199-201
REC32-864959	32-99903-1	201
REC32-864960	32-864960	198-199-201
REC32-864960	32-99902-1	201
REC32-871171	32-87117	240
REC32-871171	32-87117 1	240
REC32-871171		241-242-243
REC32-87234	32-87234	201
REC32-87235	32-87235	201
REC32-88795	32-88795	239
REC32-887952	32-887952	239-242
REC32-89653	32-89653	239
REC32-897181	32-897181	239-242-243
REC32-897301	32-897301	240-242-243
REC32-897491	32-89749-1	240-242-243
REC32-8M0071007	32-47640	239
REC32-8M0071007	32-8M0071007	239
REC32-8M0071007	32-96879	239
REC32-8M0071007		241
REC32-90949T	32-90949T	97-99-103-111-113-125
REC32-96246A4	32-96246A4	241-242
REC32-99904	32-99904	201
REC32-99904	32-99904Q	198-199-200
REC32175		101-103-105
REC321921	25-35480	90

REF.	R.O. /OEM	PAG
REC324351	324351	155-157
REC326649	25-45711	90
REC326849	25-39695	90
REC3302-804689	3302-804689	205-208-209-210
REC3302-804844002	3302-804844002	207-208-209-225
REC3302-804845	3302-804845	207
REC3302-804845	3302-9437	207
REC3302-804845		208-209
REC3302-9031	1397-5837	205
REC3302-9031	3302-9031	205
REC3302-9031		208-209-210
REC3302-9407	3302-9407	205-209
REC3304-9354A2	1347-804623R02	202
REC3304-9354A2	1347-804623R1	202
REC3304-9354A2	3304-9354A2	202
REC3304-9354A2		208
REC3310-807312A1	1389-9670A2	203
REC3310-807312A1	3310-807312A1	203
REC3310-807312A1	3310-807312R02	203
REC3310-807312A1		208
REC3310-864941A01	3310-864941A01	204-208
REC3310-864942A01	3310-861448A1	204
REC3310-864942A01	3310-864942A01	204
REC3310-864942A01		208
REC3310-864943A01	3310-861245A1	204
REC3310-864943A01	3310-864943A01	204
REC3310-864943A01		208
REC3310-866142A04	3310-866142A04	204-208
REC3310-866143A03	3310-866143A03	204-208
REC331188	25-65936	90
REC331880	17-35973	155-157
REC333572	25-26543	90
REC333572	25-64068	90
REC33662	6325	224
REC33662	33662	224
REC33662	898253003	224
REC33662	898253005	224
REC33662	33662Q	224
REC33662	8M6001218	224
REC33662	FI6900031	224
REC33662		225
REC33700	33700	223
REC33706	33706	224
REC33708	33708	221
REC33765		113
REC33765T	33765	221
REC33765T	33765T	221
REC34235T	34235	223
REC34235T	34235T	223
REC34235T		225
REC3423A1	34235A1	224
REC3423A1	34235Q1	224
REC3423A1		225
REC34765A2	34765A2	195
REC35-06003	35-866340Q03	143-245-246-247-248
REC35-06004	35-883702Q	143-245-246
REC35-06007	60565	143
REC35-06007	35-802886Q	143
REC35-19486	35-19486	143
REC35-19487	35-19487	147
REC35-49088A2	35-49088A2	142
REC35-49088A2	35-49088Q2	142
REC35-49088A2		219
REC35-53336	3302-9033	142
REC35-53336	35-53336	142
REC35-53336	35-53336Q	142
REC35-802893Q	35-802893Q01	140-247-248
REC35-802893Q01	35-802893Q01	140-245-246
REC35-805312	35-805312	147
REC35-805809	35-805809	147
REC35-805809	35-805809T	147
REC35-807256	35-807256T	143
REC35-808275	35-808275	143
REC35-816168	35-816168	147
REC35-866171A01	35-866171A01	142-246-248
REC35-879172104	35-879172104	144
REC35-892665	35-892665	142-246-247-248
REC35-8M0046752	35-11004A1	142
REC35-8M0046752	35-803897Q1	142
REC35-8M0046752	35-8M0046752	142
REC35-8M0046752		219-220
REC35-8M0122423	35-884380T	142
REC35-8M0122423	35-8M0020349	142
REC35-8M0122423	35-8M0060041	142
REC350038	12-92721	157-163
REC3517857	35-803470	146
REC3517857	35-80470Q	146
REC3581078		146
REC35915	35915	155
REC3593573	47-816814T	175
REC35983	35983	153-159-161
REC36223A2	36223	195
REC36223A2	36223A1	195
REC36223A2	36223A2	195
REC3841697	47-801332602	175
REC3850396	805217A1	212
REC3850396	864856A1	212

REF.	R.O. /OEM	PAG
REC3850396		215-216-217
REC3850397	805218	213
REC3850397	805218T	213
REC3850397		215
REC3850559	35-16595Q	146
REC3850559	35-16595T1	146
REC3850559	35-52731	146
REC3850812	75832	165
REC3850812	75832T1	153-159
REC3852045	25-62704	90
REC3852106	57-32850	235
REC3852106	57-69143Q	235
REC3852106		235-236-237-245
REC3852455	27-73866	115
REC3852455	27-73866	125
REC3852865	25-805331	90-171
REC3852866	25-31986	90
REC3852928	25-26855	90
REC3853341	36-97335	82-91
REC3853801	392-9089	223
REC3853801	392-9089Q	223
REC3853801	392-9089T	223
REC3853801	392-9767	223
REC3853801	FI6900186	223
REC3853801	FI6900190	223
REC3853801		225
REC3853847	56153	92
REC3854001	811639	212
REC3854001	811639T	212-227-232
REC3854002	817378	231
REC3854002	817378T	231
REC3854002	898253T27	227-231
REC3854003	802464	232
REC3854003	804412	232
REC3854003	811637	232
REC3854003	850487	232
REC3854003	81637002	232
REC3854003	811637001	227-232
REC3854003	811637T	232
REC3854260	3854260	227
REC3854260	811635T3	222
REC3854261	811636	223
REC3854261	8116361	223
REC3854261	898253011	223
REC3854261	8M6001254	223-227
REC3854261		222
REC3854311	804424	223
REC3854311	850485	223-227
REC3854311	3854311	227
REC3854311	8504851	223
REC3854311	898253012	223
REC3854311	8M0062084	223
REC3854311		222
REC3854331	850484	222
REC3854331	850484T	222
REC3854331	850484T2	222
REC3854548	804418	222
REC3854548	808483	222
REC3854548	3854548	227
REC3854548	804483T	222
REC3854548	808483T3	222
REC3854549	808484	223
REC3854549	8084841	223
REC3854549	898253010	223
REC3854549	8M6001253	223-227
REC3854549		222
REC3855194	805224A1	214-245-216-217
REC3858261	805025A2	218
REC3858261	805656A2	218
REC3858261	805656A5	218
REC3858261	805656A6	218
REC3858261	861155A5	218
REC3858261	861155A6	218
REC3858462	57-45856	235
REC3858462	57-49213A1	235
REC3858462	57-93658Q	235
REC3858462		235-236-246
REC3858941	852956A1	211-215
REC3858984	GM10482803	232
REC3859078	392-889925	231
REC3861267	392-881732	231
REC3861985	392-863704T	231
REC3861985	392-8M0054588	228
REC3861985	8M0054588	231
REC3863130	898141	213-228
REC387247	31-30956T	155-157-163
REC387817	31-42647A1	157-163
REC39-74381A1	39-74381A1	92
REC39-75423	39-75423	92
REC391-5090	391-5090	223
REC391-5090	391-898253004	223
REC391-5090	8M6001250	223
REC391-5090		225
REC391-5090Q1	391-5090A1	224
REC391-5090Q1	391-5090Q1	224
REC391-5090Q1		225
REC392-6316	392-6316	230
REC392-6324Q1	392-6324A1	224

REF.	R.O. /OEM	PAG
REC392-6324Q1	392-6324Q1	224
REC392-6324Q1	392-6324T1	224
REC392-6324Q1		225
REC392-6325Q1	392-6325A1	224
REC392-6325Q1	392-6325Q1	224
REC392-6325Q1	392-6325T1	224
REC392-6325Q1		225
REC392-6330	392-6330	230
REC392-9086T	392-9086	221
REC392-9086T	392-9086T	221
REC392-9766	392-9766	221
REC392-9766	392-9766Q1	221
REC392-9766	392-9766T	221
REC392-9766	FI6900185	221
REC393-4988	393-3230	221
REC393-4988	393-4988	221
REC393-4988	393-4988T	221
REC393-4988	393-4988T2	221
REC393-9459Q1	393-3230	222
REC393-9459Q1	393-4988T	222
REC393-9459Q1	393-4988T2	222
REC393-9459Q1	393-9459Q1	222
REC393831	393831	153-159-161-165
REC40005334	88751A02	230
REC40005334	888751A03	228-230
REC40005334	888751A1	230
REC41400		214
REC41641A8	41641A8	167-169
REC41674T	41674T	190
REC41802	41802	103-105-107-111-113-185-190
REC425062	807289A1	126
REC42724A3	42724A3	153
REC42785	42785	137
REC43-18411A2	43-18411A2	153-159
REC43-18411A2	43-18411A4	152-158
REC43-45814A5	43-45814A5	153-159
REC43-55778A3	43-55778A3	153-159
REC43-75325A3	43-75325A3	153-159
REC43-818807	43-818807	229
REC43-828073A1	43-828073A1	157-163
REC43-853640A2	43-853640A2	161
REC43-853641A2	43-853641A2	161
REC43-853642A2	43-853642A2	161
REC43-853643A2	43-853643A2	161
REC43-878087A2	43-878087A2	162-163
REC43-878617A2	43-853592A2	163
REC43436	43436	186-196
REC43713	43713	185-190
REC44-8146061	44-8146061	157
REC44-8146061	814606 1	163
REC44-824110	44-824110	155-157-163
REC44-850308	44-850308	163
REC45-41939F1	45-41939F1	155
REC45-42634	45-42634	157
REC45-55796	45-55796	153
REC45-557961	45-55796-1	159
REC45-557961	45-557961	161
REC45-816919	45-816919	163
REC45-853648	45-853648	163
REC45518A3	45518A3	189-196
REC45518T1	45518T1	188-196
REC45589A3	45589A3	189-196
REC45706A14	45706A14	197
REC46-44292Q03	46-44292Q03	157-176
REC46-48748T1	2495186	176
REC46-48748T1	2763441	176
REC46-48748T1	46-48748A1	176
REC46-48748T1	46-48748T1	176
REC46-64141A11	46-64141A11	154-176
REC46-72774A32	46-59112A2	133
REC46-72774A32	46-63450A2	133
REC46-72774A32	46-72774A11	133
REC46-72774A32	46-72774A32	133
REC46-72774A32	46-73823A7	133
REC46-72774A32	46-807151A12	133
REC46-807151A14	46-807151A14	179
REC46-807151A14	807151A14	178
REC46-807151A9	46-807151A9	133
REC46-862914T10	46-862914T10	133
REC46-94913A5	46-94913A5	179
REC46-96148A8	46-60367A1	177
REC46-96148A8	46-96148A5	177
REC46-96148A8	46-96148A8	177
REC46-96148T1	46-96148T1	154-156
REC46020T02	46020T02	153-159
REC46335	46335	95-97-98-99-100-103-109-111-113
REC46335	11-46335	114-115
REC47-43026Q02	47-43026Q02	163-175-249
REC47-43026Q06	47-43026Q06	177-248
REC47-59362A4	47-59362A4	178
REC47-59362A4		133
REC47-59362Q01	47-59362Q01	175-179-132-133-245-246-247
REC47-59362Q08	47-59362Q08	178
REC47-59362T5	47-59362T5	178
REC47-59362T6	47-59362T6	178

REF.	R.O. /OEM	PAG
REC47-809866T	47-809866T	175
REC47-809866T	47-831311350	175
REC47-862232A2	47-862232A2	133-175-245-246-247-248
REC47-89984Q5	47-89984Q5	154-156-177-248-249
REC47-89984T4	47-89984T4	154-156-175-249
REC47441A1	47441A1	129
REC48752T	48752T	154-156
REC48952	48952	213
REC500442		227
REC52-853594T	52-853594T	155-157-163
REC53-23720	53-23720	179
REC53-29641	53-29641	157-163
REC53-805272	53-805272	200
REC53-815949	53-815949	199-248
REC53-88242	53-88242	167-169-171
REC53114A1	53114	125
REC53114A1	53114A1	95-100-125
REC53400		101-103-110-113
REC54-38863	54-38863	185-190-195
REC54-815504320	54-815504320	185-190-195-248
REC54-815504412	54-815504412	189
REC54-86049	54-86049	189-191-195
REC55005	91-850730Q01	174
REC55131A5	55131A5	128
REC553126	25-31305	90
REC55989Q9		184-249
REC57-13457Q	57-13457Q	235-236-237-246
REC57-34359	57-34359	235
REC57-34359	57-37619Q	235
REC57-34359	57-37619T	235
REC57-34359		235-236-246
REC57-36356	57-36356	235
REC57-48122Q	57-48122Q	235-236-237
REC57-49043A1	57-49043A1	235
REC57-49043A1	57-64032Q1	235
REC57-49043A1		235-245
REC57-52692	57-52692	235
REC57-64416	57-49211	235
REC57-64416	57-64416	235
REC57-65607Q	57-65607T	235-245
REC57-78200Q1	57-78200Q1	235-236
REC57-807755Q04	57-807755Q04	237-238
REC57-807755Q05	57-807755Q05	237-238
REC57-816295Q	57-816295Q	235-236-245
REC57-817113	57-817113	237-238
REC57-861049Q	57-861049Q	237-238
REC57-861757Q	57-861757Q	237-238
REC57-861758Q	57-861758Q	237-238
REC57-861759Q	57-861759Q	237
REC57-865615Q01	57-865615Q01	237-238
REC57-865615Q02	57-865615Q02	237-238
REC57-865615Q03	57-865615Q03	237-238-245-246
REC57-865615Q04	57-865615Q04	237-245-246
REC57-865615Q05	57-865615005	237
REC57-865615Q06	57-865615Q06	237-238
REC57-865615Q07	57-865615Q07	237-238
REC57-865615Q08	57-865615Q08	237-238-245-246
REC57-865615Q09	57-865615Q09	237-238-245-246
REC57-865615Q10	57-865615010	237
REC57-91035Q1	57-91035Q1	235-236
REC57-96834Q		236-237
REC58033	58033	223
REC58033	898253007	223
REC58217	58217	222
REC58217	898253008	222
REC58217	58217Q	222
REC58217	8M6001251	222
REC59078	59078	131
REC59078Q3	59078Q3	131-245
REC59501A1	59501A1	179
REC59503	59503	178
REC59826A3	59826A3	194
REC59830A7	59830A7	153-159-161
REC59830A7	814819A3	165
REC60207	60207	109-115
REC60252A2	60252A2	95-97-100-109-115-123
REC60930	60930	125
REC60932A4	60932A1	195
REC60932A4	60932A4	189-195
REC60932A4		248-249
REC62092T	54552	219
REC62092T	62092	219
REC62092T	62092T	219
REC62092T		220-221
REC621041	621041	153-189-196
REC64851	58034	224
REC64851	81-64851	224
REC64851		225
REC65533A1	65533A1	185
REC65864	65864	222
REC65864	78016	222
REC65864		225
REC65L-13915-00	808504	142
REC65L-13915-00	8085041	142
REC65L-13915-00	808504T1	142
REC65L-13915-00		247

REF.	R.O. /OEM	PAG
REC66081A2	66081A2	153-159-161
REC681001	681001	157-163
REC69354A2	69354A2	92-194
REC70125A02	70125	210
REC70125A02	70125A02	210
REC70125A02	70125A1	210
REC70720		148
REC70817B	26-8M0050563	91
REC70817B	26-97664	91
REC70817B	26-976641	91
REC70981A3	70981A3	97-99-103-109-111-113-125
REC71464A01	71464	210
REC71464A01	72625	210
REC71464A01	71464A01	210
REC71831	64850	223
REC71831	87-71831	223
REC71831		225
REC73873A1	73873A1	186
REC74639Q02	74639Q02	185-190-195-249
REC75832T	75832T	153-159
REC76325A2	76325A2	97-100-119-123
REC76771A2	76771A2	95-109-119-123
REC76850A2	76850A2	194
REC76865	76865	155-157-163
REC77123	77123	187
REC77442A1	77442A1	197
REC774811	774811	155-157
REC78458A1	78458	195
REC78458A1	78458A1	191-195-246
REC78984A08	78984A08	127
REC78984A08	78984A1	127
REC801766	801766	224-225
REC801767	801767	224-225
REC801768	801768	224-225
REC802630T01	802630	214
REC802630T01	802630001	214
REC802630T01	802630T	214
REC802630T01	802630T01	214
REC802630T01	8M0069803	214
REC802630T01		216-217
REC802632T	802632	211
REC802632T	802632T	211
REC802632T		216
REC803148	803148	213-215-216
REC803149	803149	214-215-216
REC804626R02	1347-6493A1	202
REC804626R02	1347-7363A1	202
REC804626R02	1347-7366A	202
REC804626R02	1347-804626R1	202
REC804626R02	1347-8288A1	202
REC804626R02	1347-8291A3	202
REC804626R02	804626R02	202
REC804626R02		208
REC805016A1	805016A1	211
REC805185A3	805185A3	230
REC805185A3	805185A37	229
REC805185A36	805185A36	229-230
REC805222A1	805222A1	230
REC805223T	805223	212
REC805223T	805223T	212
REC805223T		215-216-217
REC805226A1	805226A1	213-215-216-217
REC805227A1	805227A1	215-216-217
REC805298A1	805298A1	211
REC805298A1	85785-2	211
REC805298A1	85785T	211
REC805320A03	805320A03	187-192-249
REC805536A2	805536A2	153-159-161
REC805629A1	805629A1	97
REC805629A1	805629A1	123
REC805629A1		123
REC805759Q01	43557	221
REC805759Q01	16457A4	221
REC805759Q01	43557A1	221
REC805759Q01	805759A1	221
REC805759Q01	805759A2	221
REC805759Q01	805759A5	221
REC805759Q01	805759Q01	221-229
REC805759Q01	805759T1	221
REC805759Q01	805759T2	221
REC805759Q01	90746A1	221
REC806034A1	866200A01	187-192
REC806191T	806191T	199-200
REC806490T	36525	213
REC806490T	806490	213
REC806490T	811091	213
REC806490T	806490T	213
REC806490T	97-257	213
REC806490T	97257A1	213
REC806612T	806612T	213-215-216
REC806808A2		215
REC807166A1	807166A1	103-105-107-111-113-125
REC807166A3	14348A1	125
REC807166A3	807166A3	126
REC807252Q3	807252Q3	131
REC807252Q4	807252Q4	131

REF.	R.O. /OEM	PAG
REC807252Q4	807252T4	131
REC807252Q5	807252Q5	131
REC807262R02	3310-806969A1	203
REC807262R02	3310-806969R01	203
REC807262R02	3310-8M0047212	203
REC807262R02	807262R02	203
REC807262R02		208
REC807929A1	807929A1	163
REC807952A1	807952A1	215
REC807952A1		215-216-217
REC807964A1	807964A1	230
REC808500	808500	142-218
REC809064	809064	207-208-209
REC809065	809065	207
REC809065	823728	207
REC809065	835076	207
REC809065		208
REC809066	809066	210
REC811534	811534	205-208-209-210
REC811536T	811536	205
REC811536T	811536T	205
REC811536T		208-209-210
REC814604T1	814604A1	163
REC814605	814605	163
REC814819A2	814819A2	153-159
REC814819A7	814819A7	161
REC815407A2	13753A2	222
REC815407A2	815407A2	222
REC815407A2	815407Q02	222-229
REC815471T1	815471T1	193-249
REC815919A1	815919A1	163
REC815935A7	815935A7	199
REC815954A7	815954A7	199
REC816431A1	816431A1	189-195-248-249
REC816597A1	816597A1	163
REC816607	816607	189
REC816685	816685	189-196
REC8168112	8168112	153-159-161
REC817275Q05	817275Q05	178-249
REC8172761	8172761	163
REC817377	817377	230
REC817377	817377T	230
REC818349T1	818349T1	155-157-163
REC818763A10	818763A10	155-157-163
REC821509	821509	139
REC821509	821509T01	139
REC821526001	861526001	163
REC823426A1	823426A1	207-208-209-210
REC823427A1	1397-2067	206
REC823427A1	1397-2634	206
REC823427A1	1397-3459	206
REC823427A1	1397-7542	206
REC823427A1	1397-7547	206
REC823427A1	1397-8872	206
REC823427A1	1397-8873	206
REC823427A1	823427A1	206
REC823427A1		208-209
REC823727	823727	205-208-209
REC824326002		77
REC8245191	8245191	156-163
REC827682T	827682	218
REC827682T	827682T	218
REC828692A1	828692A1	159
REC828692A1	828692A1	161
REC828830A2	828830A2	163
REC829207	57-48120Q1	235-236-245-256
REC834975	392-6326	223
REC834975	392-6326T	223
REC834975	FI6900044	223
REC834975		225
REC835702	392-6318	221
REC835702	392-6318T	221
REC835702	FI6900184	221
REC84-817376T01	84-817376T01	227
REC849899	849899	214-217
REC85060	85060	198-199-200
REC8507522	8507522	196
REC8507522	8507522 + 10-31700	186
REC853635	853635	161
REC853678T	853678	213
REC853678T	853678T	213
REC853678T		215-216-217
REC853998A1	853998	212
REC853998A1	851956A1	212
REC853998A1	853998A1	212
REC853998A1	853998T	212
REC853998A1		215-216
REC854445	854445	212-217
REC855686	35-802893Q01	140
REC85784A1	85784A1	211
REC85785A2	85785A2	211
REC86-865202T	86-865202T	139
REC860349A1	860349A1	215-216-217
REC861126A1	861126A1	215-216-217
REC861155A3	861155A2	217
REC861155A3	861155A3	217
REC861155A6	805025A2	217

REF.	R.O. /OEM	PAG
REC861155A6	805656A2	217
REC861155A6	805656A5	217
REC861155A6	805656A6	217
REC861155A6	861155A5	217
REC861155A6	861155A6	217
REC861156A03	861156A03	219
REC861156A04	861156A04	219
REC861156A1	861156A1	218
REC861188A1	861188A1	128
REC861249A1	861249	212
REC861249A1	861249A1	212
REC861249A1		215-216
REC861259	861259	211
REC861523A9	861523A9	194
REC861578	861578	186
REC861579	861579	133-179
REC861579	807731T	133
REC861677T	818383T	220
REC861677T	861677T	220
REC861677T		221
REC862048A1	97399	219
REC862048A1	812454A1	219
REC862048A1	812454A3	219
REC862048A1	862048A1	219
REC862048A1	97399A2	219
REC862048A1		221
REC862077A1	41141A2	219
REC862077A1	862077A1	219
REC862077A1		220
REC862132T	862132T	165
REC862209	862209	191
REC862210A01	22-862210A01	101
REC862210A01	22-862210A01	103
REC862210A01	22-862210A01	105
REC862210A01	22-862210A01	111
REC862210A01	22-862210A01	113
REC86234A4	47585	219
REC86234A4	71327	219
REC86234A4	77594	219
REC86234A4	86234	219
REC86234A4	8623405	219
REC86234A4	86234A3	219
REC86234A4	86234A4	219
REC86234A4		219-220-221
REC862351T	862351T	133
REC86246T	71646	219
REC86246T	78485	219
REC86246T	86246	219
REC86246T	86246A1	219
REC86246T	86246T	219
REC86246T		220-221
REC86247T	46860	219
REC86247T	63196	219
REC86247T	78820	219
REC86247T	86247	219
REC86247T	86247A2	219
REC86247T	86247T	219
REC86247T		221
REC862998	862998	214-215-216-217
REC86310	16755Q1	165
REC864244A2	864244A2	165
REC864281A1	864281A01	161
REC864281A1	865491A01	161
REC864281A2	864281A2	159-160
REC864281A2	86481A2	161
REC864282T	864282T	161
REC864297T01	864297	213
REC864297T01	864297001	213
REC864297T01	864297T01	213
REC864493	864493	131-245-246-247
REC864572	864572	142
REC864572	35-864572	142
REC864572		247
REC865329A02	865329A02	186-194-186-193
REC865436A03		193-249
REC865437A02	865437A02	186-193
REC865437A02	865437A02	186-193
REC865496A02	865496A01	165
REC865496A02	865496A02	161
REC865503T	865503T	161
REC866169T01	866169A01	217
REC866169T01	866169T01	217
REC866170A01	866170A01	217
REC86779A1	86779A1	165
REC86840A05	86840A05	191-195
REC86840A05	86840A3	195
REC86840A05	8M0062406	195
REC86840A05		248-249
REC87-805605A1	87-805605A1	214
REC87-808009A2	87-808009A2	186
REC87-808009A2	87-8M0052935	186
REC87-814281A5	87-814281A5	186
REC87-864252	87-864252	214
REC87-864252A01	87-864252A01	214
REC87-892150Q02	87-892150Q02	229
REC87290A23	87290A26	127
REC87290A4	87290A4	128-129
REC87399A2	87399A2	198-200

REF.	R.O. /OEM	PAG
REC87399A3	87399A3	199
REC87580		164-193
REC879150150	849934	212
REC879150150	879150150	212-217
REC879194401	46-879194401	132
REC879194401	8M0094406	132
REC879194401	8M6005225	132
REC88035	88035	198
REC881693002	881693002	211-217
REC882376	882376	143
REC88243A3	88243A3	167-169-171
REC882571	882571	137
REC882571	8M0084523	137
REC882687	882687	147
REC882751A04	882751A04	139
REC882751A1	828151	139
REC882751A1	828151A1	139
REC882751A1	882751A1	139
REC882751A1	882751A2	139
REC883166A2	883166A2	138
REC885174	885174	215-216
REC885176	885176	211-215-216
REC89-818864T	89-818864	138
REC89-818864T	89-818864T	138
REC89-96054T	89-91975	138
REC89-96054T	89-96054	138
REC89-96054T	89-96054T	138
REC89260		195
REC892615002	892615	213
REC892615002	892615001	213
REC892615002	892615002	213
REC892617	892617	213
REC892681	892681	215-217
REC895207	895207	147
REC89690T	89690T	244
REC898253013	884790	222
REC898253013	898253013	222
REC898253013	8M6001222	222-228
REC89825302	898253029	222
REC89825302	391-5088	222
REC89825302	391-7057	222
REC89825302	391-7057T	222
REC89825302	8M6001224	222
REC89825302	FI6901224	222
REC89825302		225
REC898253T22	884792	222
REC898253T22	898253T22	222-228
REC898253T23	888731	222
REC898253T23	898253T23	222-228
REC8M0032834	28-8M0032834	155
REC8M0032834	8M0032834	157
REC8M0042641	12-8M0042641	155
REC8M0042641	8M0042641	157
REC8M0051200	8M0051200	211-217
REC8M0054726	881731	212
REC8M0054726	8M0054726	212
REC8M0054726		217
REC8M0058164	97401	220
REC8M0058164	8M0058164	220
REC8M0058164		220-221
REC8M0061068	47442A1	129
REC8M0061381	860256A4	128
REC8M0061381	861006A1	128
REC8M0061381	8M0061381	128
REC8M0062102	8M0062102	190-239
REC8M0068784	34623	214
REC8M0068784	90806	214
REC8M0068784	815425	214
REC8M0068784	87-815425T	214
REC8M0068784	8M0068784	214
REC8M0073435	842725A3	220
REC8M0073435	861676A1	220
REC8M0073435	861676T09	220
REC8M0073435	8M0073435	220
REC8M0073435		220
REC8M0077616	805544T	213
REC8M0077616	8M0077616	213
REC8M0077616		216-217
REC8M0080805	8M0080805	184-185-190-198-199-200
REC8M0087834	885165	212
REC8M0087834	8M0087834	212
REC8M0089715	807252T1	131
REC8M0089715	8M0089715	131
REC8M0089715		246-247
REC8M0091470	807252T2	131
REC8M0091470	8M0091470	131
REC8M0091470		245-246-247
REC8M2011027	79448	169
REC8M2011027	8M2011027	155-157-163-167
REC8M2015937	8M2015937	159-161
REC8M2015938	8M2015938	159-161
REC8M6000623	8818793	213
REC8M6000623	881879010	213
REC8M6000623	8M6000623	213
REC8M6001217	391-5092	224
REC8M6001217	391-5093	224
REC8M6001217	391-898253001	224

REF.	R.O. /OEM	PAG
REC8M6001217	8M6001217	224
REC8M6001217	FI6900040	224
REC8M6001217		225
REC8M6001219	392-6325	223
REC8M6001219	392-898253005	223
REC8M6001219	8M6001219	223
REC8M6001219	FI6900031	223
REC8M6001219		225
REC8M6001249	392-6324	223
REC8M6001249	392-898223002	223
REC8M6001249	8M6001249	223
REC8M6001249	FI69000083	223
REC8M6001249	FI6900023	223
REC8M6001249	FI6900032	223
REC8M6001249	FI6900189	223
REC8M6001249		225
REC8M6001252	898253009	222
REC8M6001252	8M6001252	222
REC9-33300	806807A1	212
REC9-33301	885176	211-215-216
REC9-33302	861260	212
REC9-33302	861260T	212
REC9-33302		215-216-217
REC9-33303	805225A1	212-215-216-217
REC9-33304	849896	211
REC9-33304	802632T	211
REC9-33304		216-217
REC9-33306	881693	211
REC9-33306	881693002	211
REC9-33306		217
REC9-34081		203
REC9-35176		205
REC90095		172
REC90301-ZW1-003	11-827614	155-157-163-167
REC90490	91-17257T	174
REC90490	91-8053741	174
REC90508-ZW1-003	14-816629Q	157-163-167-169
REC90508-ZW1-003	816629Q	155
REC90736A24	90736A24	127
REC908855	26-20070	90
REC909140	25-58390	90
REC91-00001		172
REC91-00002		172
REC91-12037	91-12037	173
REC91-17256	91-17256	174
REC91-31107T	91-31107T	173
REC91-31229	91-31229	173
REC91-34569A1	91-34569A1	172
REC91-36569T	91-36569T	172
REC91-37241	91-37241	172
REC91-43506T	91-43506T	174
REC91-43579	91-43579	173
REC91-45497A1	91-45497A1	172
REC91-56048001	91-56048001	174
REC91-56775T	91-56775T	173
REC91-60523	91-60523	174
REC91-60526T	91-60526T	174
REC91-61067A04	91-61067A04	174
REC91-61069T	91-61069T	174
REC91-61077T	91-61077T	173
REC91-78310	91-78310	174
REC91-805475A1	91-805475A1	173
REC91-818162	91-818162	173
REC91-859046Q4	91-859046Q4	172
REC91-888863	91-888863	227
REC92995-08600	12-36001	154-157-179
REC93320A15	93320A10	110-121
REC93320A15	93320A15	121
REC934231	934231	155-157
REC934241	934241	155-157
REC93568	35-93568	142
REC94576	94576	179
REC94916	94916	179
REC94998A4	94998A4	153
REC966900	57-77274	235
REC966903	57-74271Q	235-236
REC966931	57-13458Q	235-236
REC96705A1	96705A1	95-116-121-123-124
REC97258A1	34625	213
REC97258A1	97258	213
REC97258A1	97258A1	213
REC97258A1	FI6900152	213
REC97258A1	FI6900198	213
REC97432A2	97432A2	92-194
REC982209	391-5075	221
REC982209	391-5075Q1	221
REC982209	F16900148	221
REC982217	1347-818620	202
REC982217	1347-8186201	202
REC982217	1347-818620R02	202
REC982217	1351-4032A1	202
REC982217	1351-5203A1	202
REC982217	1351-7355A1	202
REC982217		208
REC98230A1	98230A1	187-192
REC98504A3	98504A3	103-111-113-118-124
REC985218		222
REC98703A26	98703A26	200

REF.	R.O. /OEM	PAG
REC98703A3	98703A3	198
REC98704A26	98704A26	200
REC98704A3	98704A3	198
REC99155T2	99155T2	99-131-246-247-248
REC99356A2	99356A2	244
REC99370A2	99370A2	125
RECEFP-KT		218
RECGS00530		146
RECGS01030		146
RECGS01830		146
RECK0879		99
RECK309		104-107
RECK591		105-107
RECK6325		96
RECK8503		102-110-113
RECKITALPHAI		248
RECKITBRAVO		248
RECKITGENEII		248
RECMC00001		176
RECMC00002		176
RECMC00004	47-43026Q06	177
RECRK21069		148
RECHOL17-6		204
RECHOL717-7		204
RM10-25299	10-824941	95-97-100-109
RM10-28635	10-28635	187-192
RM10-807204	10-807204	187-192
RM11-49910	11-49910	186
RM11-92004	11-92004	165
RM12-41721	12-41721	187-192
RM12-98548	98548	192
RM12-98548	12-98548	187
RM14801A1	14801A1	107-111-120
RM14865A1	14865A1	103-105-122
RM15247A1	15247A1	231
RM15247A1	15247T02	231
RM15248A1	15248A1	232
RM15248A1	15248T02	232
RM15899A1	15899A1	232
RM15899A1	15899T02	232
RM1656-8866A17	8866A64	167
RM19543A10	865436A02	186-193
RM22-43828	22-43828T	190
RM22-49718	22-49718	197
RM22-861163	22-861163	189-191-244
RM23-847638	23-847638	192
RM23-87560091	23-87560091	165
RM23-87560094	23-87560094	165
RM23-87560097	23-87560097	165
RM23-98356	23-98356	185-190
RM23-983571	23-983571	185-190
RM23-99352	23-99352	187-192
RM26-879194364		91
RM31-86763A04	31-86763A04	165
RM32-805375	32-805375	239-244
RM32-806209-1	32-806209-1	241
RM32-860144	32-860144	241-242
RM32-860331	32-860331	241
RM32-861057	32-861057	240
RM32-861058	32-861058	240
RM35-802893Q	35-802893Q01	140
RM35-863829	35-863829	143
RM35-866340Q02	35-866340Q03	143
RM35-866594Q01	35-866594K01	140
RM35-866594Q01	35-866594Q01	140
RM35-866594Q01		245
RM35-883702Q	35-883702Q	143
RM35-8M2001030	35-8M2001030	143
RM41646A9	41646A9	191
RM42260A6	42260A6	185
RM42815A6	42815A6	189
RM43-14063A1	43-14063A1	167-169
RM43-66773A3	43-66773A3	153
RM43-887903A1	43-887903A1	165
RM43-887906A1	43-887906A1	165
RM43-887909A1	43-887909A1	165
RM43881A14	8M0062568	185
RM43881A17	43881A17	190
RM44-41630T	44-41630T	167-169
RM44-41630T	44-850308	167
RM44-865322T	44-865322T	171
RM44181A1	44181A1	92
RM44182A1	44182A1	92
RM45-41629A2	41629A2	167
RM45-41629A2	45-41629A2	169
RM45-41629A2	805370A1	171
RM45-812773T	45-812773	165
RM46-807151A8	46-72774A69	132
RM46-807151A8	46-807151A8	132
RM52-865344A01	52-865344A01	165
RM53-87843	53-87843	188-191-244
RM54-12078	54-12078	187-192
RM57-862054Q		235-245
RM57410	57410	171
RM805182A1	805182A1	171
RM805322	805322	171
RM805361T2	805361T2	232
RM805361T3	805361T3	231

REF.	R.O. /OEM	PAG
RM805361T6	805361T6	232
RM806031A2	806031A2	189
RM806034A2	806034A2	187
RM806193A48	19742A1	244
RM806193A48	19742A3	244
RM806193A48	806193A20	244
RM806193A48	806193A38	244
RM806193A48	806193A48	244
RM807130A4	44266T	122
RM807130A4	44266T1	122
RM807130A4	807130A4	103-105-107-111-113-122
RM807130A4	8M0115149	122
RM807371T1	807371T1	244
RM815932	815932	159-161
RM816219A4	816219A4	99-116
RM817275A1	817275A1	163
RM821125A1	821125A1	232
RM821125A1	821125T02	232
RM863444T1	863444T1	129
RM863457A2	863457A2	128
RM863631T1	863631T1	129
RM864363A1	864363A1	186
RM864364A1	864364A1	186
RM865328A01	865328A01	187
RM865425A03	865425A03	165
RM865470	865470	190
RM866136A01	866136A01	165-187-192
RM86739	86739	171
RM86739	14-86739	167-169
RM86754T	86754T	171
RM88-79023A91	88-79023A91	139
RM8M0052936	87-808009A1	186
RM8M0052936	87-808009A3	186
RM8M0052936	87-8M0052936	186
RM8M0062440	8M0062440	192
RM91-17273	91-17273	173
RM91-17275A1	91-17275A1	173
RM91-17302	91-17302	173
RM91-31229A7	91-31229A7	172
RM92-8M0086224U3		245-246-247
RM92-8M0086227U3		245-246-247-248
RM94989A6	94989A6	185
RM97351	97351	165
RM99356A1	99356A1	244
RM99438A1	99438A1	244
SED3092000	805602A1	120
SED3092600	807988A03	113-120
SED3092600	807988A3	103
SED3092600		111
SED3092610	12076A2	97-98-120
SED3092900	805265A1	120
SED3093300	805602A2	120
SED3093301	80176320	120
SED3095400	864309T02	105-107-120
SED3095500	864591T02	105-107-120
SHE10615K		133
SHE15000K		132-175
SHE15979	808145T	132-178
SHE26000K		133-175
SHEG151	805835	132
SHEG155	806152	132
SHEG2603X		133
SHEP1016	854179001	133
SOL1511-142-23	48-832834A45	251
SOL1511-143-21	48-832832A45	251
SOL1511-145-19	48-832830A45	251
SOL1511-148-17	48-832828A45	251
SOL1511-150-15	48-78116A4	251
SOL1511-153-19	48-13700A46	251
SOL1511-153-21	48-13702A46	251
SOL1511-153-23	48-13704A46	251
SOL1511-155-17	48-18278A46	251
SOL1511-158-15	48-19838A46	251
SOL1511-160-13	48-78114A45	251
SOL1511-160-13	48-826072A46	251
SOL1512-153-19	48-13701A46	251
SOL1512-153-21	48-13703A46	251
SOL1512-155-17	48-90159A46	251
SOL1512-158-15	48-19841A46	251
SOL1513-140-21	48-832832A45	251
SOL1513-140-21	48-834854A45	251
SOL1513-140-23	48-832834A45	251
SOL1513-143-19	48-832830A45	251
SOL1513-143-19	48-834852A45	251
SOL1513-145-17	48-831850A45	251
SOL1513-145-17	48-832828A45	251
SOL1513-148-15	48-78116A4	251
SOL1514-140-21	48-834855A45	251
SOL1514-143-19	48-834853A45	251
SOL1514-145-17	48-834851A45	251
SOL1531-140-19	48-16316A46	251
SOL1531-140-19	48-832830A45	251
SOL1531-140-21	48-16318A46	251
SOL1531-140-21	48-832832A45	251
SOL1531-140-23	48-16320A46	251
SOL1531-140-23	48-832834A45	251
SOL1531-140-25	48-16322A46	251

REF.	R.O. /OEM	PAG
SOL1531-140-25	48-78126A45	251
SOL1531-143-17	48-16314A46	251
SOL1531-143-17	48-832828A45	251
SOL1531-145-15	48-16312A46	251
SOL1531-145-15	48-78116A4	251
SOL1531-156-13	48-78114A45	251
SOL1532-140-19	48-16317A46	251
SOL1532-140-21	48-16319A46	251
SOL1532-140-23	48-16321A46	251
SOL1532-143-17	48-16315A46	251
SOL1551-140-24	48-16322A46	251
SOL1551-140-24	48-16550A46	251
SOL1551-143-22	48-16320A46	251
SOL1551-143-22	48-16548A46	251
SOL1551-145-21	48-16546A46	251
SOL1551-148-16	48-16314A46	251
SOL1551-148-18	48-16316A46	251
SOL1551-148-19	48-16544A46	251
SOL1551-148-20	48-16318A46	251
SOL1552-140-24	48-16549A46	251
SOL1552-143-22	48-16321A46	251
SOL1552-143-22	48-16547A46	251
SOL1552-145-21	48-16545A46	251
SOL1552-148-16	48-16315A46	251
SOL1552-148-18	48-16317A46	251
SOL1552-148-19	48-16543A46	251
SOL1552-148-20	48-16319A46	251
SOL1571-145-25	48-13706A46	251
SOL1571-148-23	48-13704A46	251
SOL1571-148-23	48-13705A46	251
SOL1571-150-21	48-13702A46	251
SOL1571-153-19	48-13700A46	251
SOL1571-155-17	48-18278A46	251
SOL1572-145-25	48-13707A46	251
SOL1572-150-21	48-13703A46	251
SOL1572-153-19	48-13701A46	251
SOL1572-155-17	48-90159A46	251
SOL1611-178-21	48-18620A40	251
SOL1611-178-21	48-18620A6	251
SOL1611-183-19	48-18618A40	251
SOL1611-183-19	48-18618A6	251
SOL1611-188-17	48-18616A40	251
SOL1611-188-17	48-18616A6	251
SOL1611-193-15	48-18614A40	251
SOL1611-193-15	48-18614A6	251
SOL1612-178-21	48-18621A40	251
SOL1612-178-21	48-18621A6	251
SOL1612-183-19	48-18619A40	251
SOL1612-183-19	48-18619A6	251
SOL1612-188-17	48-18617A40	251
SOL1612-188-17	48-18617A6	251
SOL1612-193-15	48-18615A40	251
SOL1612-193-15	48-18615A6	251
SOL1641-173-25	48-18620A6	251
SOL1641-175-23	48-18618A40	251
SOL1641-175-23	48-18618A6	251
SOL1641-175-23	48-18620A40	251
SOL1641-178-21	48-18616A40	251
SOL1641-178-21	48-18616A6	251
SOL1641-183-19	48-18614A40	251
SOL1641-183-19	48-18614A6	251
SOL1641-188-17	48-18612A40	251
SOL1641-188-17	48-18612A6	251
SOL1641-193-15	48-18610A40	251
SOL1641-193-15	48-18610A6	251
SOL1642-173-25	48-18621A40	251
SOL1642-173-25	48-18621A6	251
SOL1642-175-23	48-18619A40	251
SOL1642-175-23	48-18619A6	251
SOL1642-178-21	48-18617A40	251
SOL1642-178-21	48-18617A6	251
SOL1642-183-19	48-18615A40	251
SOL1642-183-19	48-18615A6	251
SOL1642-188-17	48-18613A40	251
SOL1642-188-17	48-18613A6	251
SOL1642-193-15	48-18611A40	251
SOL1642-193-15	48-18611A6	251
SOL1651-138-28		252
SOL1651-140-24		252
SOL1651-140-25		252
SOL1651-140-26		252
SOL1651-140-27		252
SOL1651-143-22		252
SOL1651-143-23		252
SOL1651-144-20		252
SOL1651-144-21		252
SOL1654-150-28		252
SOL1654-155-24		252
SOL1654-155-25		252
SOL1654-155-26		252
SOL1654-155-27		252
SOL1654-158-22		252
SOL1654-158-23		252
SOL1654-160-20		252
SOL1654-160-21		252
SOL9511-143-21		252
SOL9511-145-19		252
SOL9511-148-17		252

REF.	R.O. /OEM	PAG
SOL9511-150-15		252
SOL9511-153-13		252
SOL9512-143-21		252
SOL9512-145-19		252
SOL9512-148-17		252
SOL9512-150-15		252
SOL9513-140-21		252
SOL9513-143-19		252
SOL9513-145-17		252
SOL9513-148-15		252
SOL9531-140-19		252
SOL9531-140-21		252
SOL9531-140-23		252
SOL9531-143-17		252
SOL9531-145-15		252
SOL9532-140-19		252
SOL9532-140-21		252
SOL9532-140-23		252
SOL9532-143-17		252
SOL9532-145-15		252
SOL9571-145-25		252
SOL9571-148-23		252
SOL9571-150-21		252
SOL9571-153-19		252
SOL9571-155-17		252

REF.	R.O. /OEM	PAG
SOL9571-158-15		252
SOL9572-145-25		252
SOL9572-148-23		252
SOL9572-150-21		252
SOL9572-153-19		252
SOL9572-155-17		252
SOL9572-158-15		252
SOLRBX-102		252
TEN00800	1301339	180
TEN00801	34127	180
TEN00802	94286	180
TEN00803	47820	180
TEN00804	46399	180
TEN00806	43994	180
TEN00806BIS	821521	180
TEN00807	55989	180
TEN00814	821629	180
TEN00815	821630	180
TEN00817	806189	180
TEN00818	806190	180
TEN00819	806105	180
TEN00820	76214-5	181
TEN00823	823912	181
TEN00824	823913	181
TEN00826	76214	181

REF.	R.O. /OEM	PAG
TEN00827	17264	181
TEN00828	806188	181
TEN00835	76214-4	181
TEN00836	865182	181
TEN00839	853762	181
TENKITALPHAONE/1	888756Q02	154-156-181-249
TENKITALPHAONE/2	888756Q01	181
TENKITALPHAONE/2	888756Q03	181
TENKITALPHAONE/2		158-160-162-249
TENKITBRAVOI	888758Q01	166-181-249
TENKITBRAVOII-III	888761Q01	168-181-249
TENKITBRAVOIII-04	888761Q02	170-181-249
TRANSONALPHA2G	6-6111002LP	185
TRANSONALPHAI	6-6010000CP	185
TRANSONBRAVO	6-6211002NZ	192
TRANSONBRAVO	6-6311002NZ	192

ÍNDICE / TABLE OF CONTENTS / INDICE

R.O. / OEM --> REF

R.O. /OEM	REF	PAG
6325	REC33662	224
12449	PH300-0010	136
12708	REC12708	165
12711	REC12711	165-196
12784	REC12784	165
13037	PH375-0001	139
13171	REC12-835467Q01	169
13220	REC13220	207-210
15995	REC15995	99
17264	TEN00827	181
17649	PH200-T015	137
19685	PH300-0010	136
25661	PH375-0011	138
32734	CEF500512K	195
32734	REC18654A1	195
33266	REC195141	230
33662	REC33662	224
33700	REC33700	223
33706	REC33706	224
33708	REC33708	221
33765	REC33765T	221
34127	TEN00801	180
34235	REC34235T	223
34623	REC8M0068784	214
34625	REC97258A1	213
35852	GS38122	193
35915	REC35915	155
35983	REC35983	153-159-161
36223	CEF500522K	195
36223	REC36223A2	195
36525	REC806490T	213
38547	REC1463-9382	231
39920	BAMC-20-55538	119
41802	REC41802	103-105-107-111-113-185-190
42785	REC18-5953	137
42785	REC42785	137
43436	REC43436	186-196
43557	REC805759Q01	221
43713	REC43713	185-190
43994	TEN00806	180
46335	REC46335	95-97-98-99-100-103-109-111-113
46399	TEN00804	180
46860	REC86247T	219
47585	REC86234A4	219
47587	BAMC29-47587	127
47735	BAMC1-47735	117
47736	BAMC1-47736	117
47820	TEN00803	180
48952	REC48952	213
52352	REC195141	230
53051	REC27-53045Q01	130
53114	CEF500524	125
53114	REC53114A1	125
54552	REC62092T	219
55989	TEN00807	180
56045	PH300-0013	136

R.O. /OEM	REF	PAG
56153	REC3853847	92
57410	RM57410	171
58033	REC58033	223
58034	REC64851	224
58217	REC58217	222
58231	REC195141	230
59078	REC59078	131
59498	BAMC29-59498	129
59503	REC59503	178
59755	PH300-0013	136
59974	MP425113	126
60207	REC60207	109-115
60565	REC35-06007	143
60930	REC60930	125
62092	REC62092T	219
62424	REC195141	230
62898	BAMC29-62898	129
63196	REC86247T	219
64850	REC71831	223
65864	REC65864	222
69729	PH300-0013	136
70125	REC70125A02	210
71327	REC86234A4	219
71464	REC71464A01	210
71646	REC86246T	219
72608	MP425149	126
72625	REC71464A01	210
75416	FEDV-3929	92
75832	REC3850812	165
76214	TEN00826	181
76865	REC76865	155-157-163
77123	REC77123	187
77594	REC86234A4	219
78016	REC65864	222
78402	PH300-0022	136
78458	CEF500520K	195
78458	REC78458A1	195
78485	REC86246T	219
78820	REC86247T	219
79448	REC8M2011027	169
85060	REC85060	198-199-200
85538	CMX-1	182
85538	CMX-1A	182
86234	REC86234A4	219
86246	REC86246T	219
86247	REC86247T	219
86739	RM86739	171
87581	REC195141	230
88035	REC88035	198
90806	REC8M0068784	214
92916	REC23-8M8000506	169
94286	TEN00802	180
94576	REC94576	179
94916	REC94916	179
97258	REC97258A1	213
97351	RM97351	165
97399	REC862048A1	219

R.O. /OEM	REF	PAG
97401	REC8M0058164	220
98548	RM12-98548	192
98555	PH300-0010	136
195141	REC195141	230
324351	REC324351	155-157
393831	REC393831	153-159-161-165
621041	REC621041	153-189-196
681001	REC681001	157-163
774811	REC774811	155-157
801766	REC801766	224-225
801767	REC801767	224-225
801768	REC801768	224-225
802464	REC3854003	232
802630	REC802630T01	214
802632	REC802632T	211
803148	REC803148	213-215-216
803149	REC803149	214-215-216
804412	REC3854003	232
804418	REC3854548	222
804424	REC3854311	223
805218	REC3850397	213
805223	REC805223T	212
805322	RM805322	171
805835	SHEG151	132
805884	PH300-0016	136
806105	TEN00819	180
806152	SHEG155	132
806188	TEN00828	181
806189	TEN00817	180
806190	TEN00818	180
806490	REC806490T	213
807652	PH300-0011	136
807653	PH300-0012	136
808483	REC3854548	222
808484	REC3854549	223
808500	REC808500	142-218
808504	REC65L-13915-00	142
809064	REC809064	207-208-209
809065	REC809065	207
809066	REC809066	210
811091	REC806490T	213
811534	REC811534	205-208-209-210
811536	REC811536T	205
811575	MP425113	126
811636	REC3854261	223
811637	REC3854003	232
811639	REC3854001	212
814605	REC814605	163
815425	REC8M0068784	214
815932	RM815932	159-161
816607	REC816607	80-82-189
816685	REC816685	189-196
817119	PH300-0010	136
817377	REC817377	230
817378	REC3854002	231
821509	REC821509	139
821521	TEN00806BIS	180

R.O. /OEM	REF	PAG
821629	TEN00814	180
821630	TEN00815	180
823341	CMX-1	182
823341	CMX-1A	182
823727	REC823727	205-208-209
823728	REC809065	207
823912	TEN00823	181
823913	TEN00824	181
824324	MP425024	126
824330	MP425036	126
827682	REC827682T	218
828151	REC882751A1	139
834832	PH300-0030	137
835076	REC809065	207
849896	REC9-33304	211
849899	REC849899	214-217
849934	REC879150150	212
850484	REC3854331	222
850485	REC3854311	223-227
850487	REC3854003	232
853635	REC853635	161
853678	REC853678T	213
853762	TEN00839	181
853998	REC853998A1	212
854445	REC854445	212-217
859135	REC11-859135	159
860231	REC27-8637251	124
861249	REC861249A1	212
861259	REC861259	211
861260	REC9-33302	212
861578	REC861578	186
861579	REC861579	133-179
862031	PH300-0034	136
862209	REC862209	191
862998	REC862998	214-215-216-217
863725	REC27-8637251	124
864297	REC864297T01	213
864493	REC864493	131-245-246-247
864572	REC864572	142
865182	TEN00836	181
865470	RM865470	190
881693	REC9-33306	211
881731	REC8M0054726	212
882376	REC882376	143
882571	REC882571	137
882687	REC882687	147
883885	PH600-0006	132-133
883925	PH600-0003	132
884727	PH600-0004	132
884790	REC898253013	222
884792	REC898253T22	222
885165	REC8M0087834	212
885174	REC885174	215-216
885176	REC885176	211-215-216
885176	REC9-33301	211-215-216
888731	REC898253T23	222
889333	BAMC29-63588	128
892615	REC892615002	213
892617	REC892617	213
892681	REC892681	215-217
895207	REC895207	147
898141	REC3863130	213-228
934231	REC934231	155-157
934241	REC934241	155-157
1301339	TEN00800	180
2495186	REC46-48748T1	176
2763441	REC46-48748T1	176
3349198	REC15000K	175
3854260	REC3854260	227
3854311	REC3854311	227
3854548	REC3854548	227
3916720	REC15000K	175
8079821	REC27-8079821	206
8084841	REC3854549	223
8085041	REC65L-13915-00	142
8116361	REC3854261	223
8168112	REC8168112	153-159-161
8172761	REC8172761	163
8245191	REC8245191	156-163
8503991	PH600-0005	132
8504541	PH600-0002	132-133
8504851	REC3854311	223
8507522	REC8507522	196
8623405	REC86234A4	219
8733261	PH375-0001	139
8818793	REC8M6000623	213
80176320	SED3093301	120
81637002	REC3854003	232
82671013	REC11-862903	197
802630001	REC802630T01	214
811637001	REC3854003	227-232
854179001	SHEP1016	133
861526001	REC821526001	163
864297001	REC864297T01	213
879150150	REC879150150	212-217
879194241	REC016940	146
881693002	REC881693002	211-217
881693002	REC9-33306	211

R.O. /OEM	REF	PAG
881879010	REC8M6000623	213
892615001	REC892615002	213
892615002	REC892615002	213
898253003	REC33662	224
898253005	REC33662	224
898253007	REC58033	223
898253008	REC58217	222
898253009	REC8M6001252	222
898253010	REC3854549	223
898253011	REC3854261	223
898253012	REC3854311	223
898253013	REC898253013	222
898253029	REC89825302	222
10-20518	REC10-20518	186-196
10-28635	RM10-28635	187-192
10-28636	REC10-28668	185
10-28668	REC10-28668	153-161
10-28688	REC10-28668	159
10-30206	REC10-30206	149-155-157
10-30720	REC10-30720	155
10-31700	REC10-31700	186-196
10-32470	REC10-32470	155-157
10-34354	REC10-34354	97
10-35386	REC10-35386	95-109-114-115
10-37562	REC10-37562	100
10-37612	REC10-37612	113-114-115
10-43749	REC10-43749	103-105-107-111-113
10-45590	REC10-45590	189-196
10-53728	REC10-53728	97-98-103-105-107-111
10-66686	REC10-66686	229
10-668631	REC10-668631	97-98
10-72094	REC10-72094	97
10-73657	REC10-73657	99
10-74727	REC22-73379	99
10-76156	REC10-76156	155-157
10-79953Q04	REC10-79953Q04	153-159-161-249
10-806290	REC10-806290	199-200
10-806327	REC10-806327	163-167-169-171
10-807204	RM10-807204	187-192
10-812509184	MP0180-000	135
10-816601	REC10-816601	150-159-161-171
10-816928	REC10-816928	163
10-824941	RM10-25299	95-97-100-109
10-85486	REC10-85486	198-199-200
10-861788	REC10-861788	135
10-865321	REC313715	171
10-865982005	REC10-865982005	103-111-113
10-86801	REC10-86801	187-192
10-90926	REC10-90926	229
10-96411	REC10-96411	156
10-97934	REC10-97934	194
10-97934A1	REC10-97934A1	186-194
10-98794	REC10-98794	105-107-153-159-161
11-13436	REC11-13436	155-157
11-134371	REC11-862903	187
11-134391	REC11-34933	149-189
11-22339	REC11-22339	153-159-161-165
11-34933	REC11-34933	149-185-190
11-35921	REC11-35921	155-157-163
11-46335	REC46335	114-115
11-49910	RM11-49910	186
11-52707Q1	REC11-52707Q1	154-156-162-166-168
11-8267089	REC11-8267089	155-156-190
11-827614	REC11-52707Q1	169
11-827614	REC90301-ZW1-003	155-157-163-167
11-859116	REC11-34933	149-153-155-157-171-191-198-200
11-859124	REC11-859124	155-157
11-859135	REC11-859135	161
11-862902	REC11-862902	95-97
11-863332	REC11-863332	194
11-92004	RM11-92004	165
12-18448	REC12-18448	163
12-19183-3	REC12-191833	171
12-191833	REC12-191833	153-155-157-159-161-163-165-167-169-248
12-20084	REC12-20084	95-97-98-179
12-27880	REC12-27880	155-157
12-29245	REC12-29245	155-157
12-31211A2	REC12-31211Q03	163
12-31211Q03	REC12-31211Q03	155-157-167-169
12-31266	REC12-31266	155-157
12-32666	REC12-32666	153-189
12-32834	REC12-32834	194
12-35777	REC12-35777	194
12-35935	REC12-45176	159-161-189-191
12-36001	REC92995-08600	154-157-179
12-39116	REC12-39116	189
12-41721	RM12-41721	187-192
12-44163	REC12-44163	198-200
12-44164	REC12-44164	200
12-45176	REC12-45176	150-171
12-45810	REC12-45810	153-159-161
12-46765	REC12-46765	197
12-72498	REC12-72498	189

R.O. /OEM	REF	PAG
12-815472	REC12-815472	186
12-815952	REC12-815952	199
12-835467Q01	REC12-835467Q01	155-157-163-167
12-85058	REC12-85058	198
12-8M0042641	REC8M0042641	155
12-90931	REC12-90931	229
12-92721	REC350038	157-163
12-98548	RM12-98548	187
12076A2	HOT20975	97-98-119
12076A2	MAR076	97-98-119-123
12076A2	SED3092610	97-98-120
12632A7	REC12632A7	194
12644A1	REC12644A1	195
13-33734	REC13-33734	194
13-35048	REC13-35048	97-99-103-105-107-109-111-113-114-115-165
13-39107	REC13-39107	99
13-42351-1	REC13-423511	155-167
13-423511	REC13-423511	157-163-169
13-69432	REC304454	199-200
1336-3594A1	REC1347-818619R02	203
13447A1	REC17177A1	230
1346-2770	REC1398-3089	206
1347-6492A1	REC1347-816373A4	204
1347-6493A1	REC804626R02	202
1347-7361A1	REC1347-9661A3	202
1347-7362A1	REC1347-816373A4	204
1347-7363A1	REC804626R02	202
1347-7364A1	REC1347-9661A3	202
1347-7366A	REC804626R02	202
1347-804623R02	REC3304-9354A2	202
1347-804623R1	REC3304-9354A2	202
1347-804624R02	REC1347-816373A4	204
1347-804626R1	REC804626R02	202
1347-816373A4	REC1347-816373A4	204
1347-818619	REC1347-818619R02	203
1347-8186191	REC1347-818619R02	203
1347-818619R02	REC1347-818619R02	203
1347-818620	REC982217	202
1347-8186201	REC982217	202
1347-818620R02	REC982217	202
1347-8186211	REC1348-818621R02	202
1347-818621R02	REC1348-818621R02	202
1347-818622	REC1376-818622R02	202
1347-8186221	REC1376-818622R02	202
1347-8288A1	REC804626R02	202
1347-8291A3	REC804626R02	202
1347-8292A4	REC1347-816373A4	204
1347-8296A4	REC1347-9661A3	202
1347-9415T	REC1347-816373A4	204
1347-9661A3	REC1347-9661A3	202
1347-9662A4	REC1347-816373A4	204
1348-818621	REC1348-818621R02	202
1348-818621R02	REC1348-818621R02	202
1351-4032A1	REC982217	202
1351-4263A1	REC1347-818619R02	203
1351-4263A2	REC1347-818619R02	203
1351-4263A3	REC1347-818619R02	203
1351-5202A1	REC1347-818619R02	203
1351-5203A1	REC982217	202
1351-6065A2	REC1347-818619R02	203
1351-7354A1	REC1347-818619R02	203
1351-7355A1	REC982217	202
1351-8480A2	REC1348-818621R02	202
13524A1	REC13524A1	223
13524A4	REC13524A6	223
13524A5	REC13524A1	223
13524A6	REC13524A6	223
13524Q06	REC13524A6	223-229
13524T1	REC13524A1	223-229
13753A2	REC815407A2	222
1376-5659A1	REC1376-818622R02	202
1376-5744A1	REC1376-818622R02	202
1376-6152A1	REC1376-818622R02	202
1376-818622R02	REC1376-818622R02	202
1389-9670A2	REC3310-807312A1	203
1396-4148	REC1396-4148	210
1396-4656	REC1396-4656	207-209
1396-5222	REC1396-5238	207
1396-5238	REC1396-5238	207
1397-2060	REC1397-2060	205-208-209
1397-2067	REC823427A1	206
1397-2150	REC1397-2150	142
1397-2610	REC1397-2610	205
1397-2634	REC823427A1	206
1397-3327	REC1397-3327	205
1397-3458	REC1397-3458	206
1397-3459	REC823427A1	206
1397-5830	REC1397-8760	206
1397-5831	REC1397-5831	207-209
1397-5837	REC3302-9031	205
1397-6367A1	REC1397-6367A1	206
1397-7099	REC1397-8760	206
1397-7542	REC823427A1	206
1397-7547	REC823427A1	206
1397-8545	REC1397-8767Q	142
1397-8546	REC1397-3327	205

R.O. /OEM	REF	PAG
1397-8582	REC1397-8582	210
1397-8760	REC1397-8760	206
1397-8767	REC1397-8767Q	142
1397-8767Q	REC1397-8767Q	142
1397-8872	REC823427A1	206
1397-8873	REC823427A1	206
1397-8959	REC1397-3327	205
1398-3089	REC1398-3089	206
14-18323	REC14-18323	157-163-167-169
14-79447	REC14-79447	155
14-816629Q	REC90508-ZW1-003	157-163-167-169
14-86739	RM86739	167-169
14034A3	REC14034A3	198
14035A3	REC14035A3	198
14336A20	PH200-T016	137
14336A8	PH200-T016	137
14336A9	PH200-T016-SK	137
14348A1	REC807166A3	125
14478T	BAMC-20-14478	122
14478T01	BAMC-20-14478	101-103-111-113-122
14505A2	REC14505A2	194
14587A5	REC14587A7	157-163
14801A1	RM14801A1	107-111-120
14865A1	RM14865A1	103-105-122
15-32563A1	REC15-32563A1	153-159-161
15-35980A1	REC15-35980A1	153-159-161
15-36178A02	REC15-36178A02	153-159-161
15-42637A1	REC15-42637A1	157-163
15-44491A1	REC15-44491A1	163
15-45691A1	REC15-45691A1	153-159
15-47397A1	REC15-47397A1	155-157-163
15-57007A1	REC15-57007A1	155
15-71013	REC15-71013	153-159-161
15-86749A1	REC15-86749A1	167-169-171
15-92914A1	REC15-92914A1	167-169
15247A1	RM15247A1	231
15247T02	RM15247A1	231
15248A1	RM15248A1	232
15248T02	RM15248A1	232
1547-815930A7	REC1547-815930A7	151-159
1547-861063A10	REC1547-861063A10	150-151
1547-861063A12	REC1547-861063A12	150-151
1547-861063A6	REC1547-861063A6	150-151
1547-861063A8	REC1547-861063A8	150-151
1547-9412A20	REC1547-9412A20	149
1547-9412A21	REC1547-9412A21	149
1547-9412A22	REC1547-9412A22	149
1547-9412A23	REC1547-9412A23	149
15899A1	RM15899A1	232
15899T02	RM15899A1	232
16-49545	REC16-49545	95-100-103-109-111-113-114-115
16-56826	REC16-56826	97
16-59579	REC16-59579	189-191
16-70236	REC16-70236	95-97
16-806300	REC16-806300	98
16-97520	REC16-97520	109
1623-5356A4	REC1623-5356A4	150-154
1623-815822A30	REC1623-815822A30	151-163
1623-815822A32	REC1623-815822A53	150-151
1623-815822A36	REC1623-815822A30	151
1623-815822A43	REC1623-815822A53	150-151
1623-815822A45	REC1623-815822A55	150-151
1623-815822A47	REC1623-815822A47	150-151
1623-815822A53	REC1623-815822A53	150-151
1623-815822A55	REC1623-815822A55	150-151
1623-815823A5	REC1623-815822A53	150-151
1623-8951A33	REC1623-8951A33	149-150
1623-8951A37	REC1623-8951A37	150-156
1623-8951A43	REC1623-8951A43	149-150
16457A4	REC805759Q01	221
1656-8866A10	REC1656-8866A55	149-167
1656-8866A15	REC1656-8866A63	149
1656-8866A55	REC1656-8866A55	149-167
1656-8866A63	REC1656-8866A63	149-167
16755Q1	REC16755Q1	164-191-193-248-249
16755Q1	REC86310	165
16792A39	REC16792A39	186
17-14872A1	REC17-14872A1	198-209
17-14872A1	REC21380	198
17-14873A1	REC17-14873A1	198
17-14873A1	REC21370	198
17-35973	REC331880	155-157
17-44166	REC17-44166	200
17-44166T1	REC14-44166T1	200
17-44167A1	REC17-44167A1	200
17-47617	REC17-47617	229
17-815953A01	REC17-815953A01	199
17177A1	REC17177A1	230
17494A1	REC17494A1	130
17649T	PH200-T015	137
18-32665	REC18-32665	153-189
18525A1	PH200-T064-1B	138
18643A7	REC18643A7	194
18654A1	CEF500512K	195
18654A1	REC18654A1	189-191-195
19-14842	REC19-14842	198-200

R.O. /OEM	REF	PAG
19-42682	REC19-42682	153
19-47579	REC19-47579	153
19-59504	REC19-59504	179
19-815951	REC19-815951	199
19-864689	REC19-864689	105-107
19405A4	REC13524A6	223
19742A1	RM806193A48	244
19742A3	RM806193A48	244
21-20553	REC21-20553	95-97-98
22-328022	REC22-328022	97-103-111-113-114-115
22-32803	REC22-32803	98-99
22-36382	REC22-36382	95-97-103-111-113
22-384071	REC22-384071	111
22-41622	REC22-41622	97-103-109-111-113-114
22-428611	REC22-428611	99-103-105-107-111-113-153-190
22-43828T	RM22-43828	190
22-49718	RM22-49718	197
22-67892	REC22-67892A05	169
22-73379	REC22-73379	103-105-107-111-113-185
22-76170	REC22-76170	99
22-806608A1	REC13980	95-97-98
22-861150A1	REC22-861150T02	189-191-244
22-861150A2	REC22-861150T02	244
22-861150T02	REC22-861150T02	244
22-861163	RM22-861163	189-191-244
22-862210A01	REC862210A01	101
22-862210A01	REC862210A01	103
22-862210A01	REC862210A01	105
22-862210A01	REC862210A01	111
22-862210A01	REC862210A01	113
22-866725	REC22-866725	97-99-105-107-109-111-113-114-115
22-88847A1	REC22-88847A1	184-190
22-8M0058389	REC22-67892A05	171
22-98477A2	REC22-98477A2	129
23-29804T	REC23-29804T	155-157
23-30617A2	REC23-30617A2	155-157
23-32632	REC23-32632	153
23-67370	REC23-67370	163
23-805041A2	REC23-805041A2	188-196
23-806036A1	REC23-806036A1	188-196
23-806922	REC23-806922	128-129
23-807073	REC23-807073	200
23-815921A21	REC23-815921A21	163
23-8159501	REC23-8159501	199
23-816583	REC23-816583	150-163
23-824108	REC23-824108	157-163
23-847637	REC23-847637	187-192
23-847638	RM23-847638	192
23-853849	FED7205M	92
23-853853002	REC23-853853002	92
23-853855001	REC23-853855001	92
23-861209A1	REC23-861209A1	164-165-191-196
23-87560091	RM23-87560091	165
23-87560094	RM23-87560094	165
23-87560097	RM23-87560097	165
23-89574	REC23-89574	197
23-90915	REC23-90915	229
23-92916	REC23-8M8000506	167-171
23-98356	RM23-98356	185-190
23-983571	RM23-983571	185-190
23-99291T	REC23-99291	198
23-99299	REC23-99299	194
23-99322	REC23-99322	186-194
23-99352	RM23-99352	187-192
24-17997A1	REC24-17997A1	159-161-165
24-30893	REC24-30893	157-163
24-30893	REC31-30895T	155
24-34576	REC24-34576	157
24-75411T	REC24-56159	92
24-803192A2	REC27-803192A2	133
25-16524	REC25-16524	90
25-20081	REC25-20081	90
25-20415	REC25-16524	90
25-20826	REC308627	90-167-169-171
25-20863	REC25-80863	90
25-21836	REC25-21836	90-163
25-23145	REC125017	90
25-25439	REC25-25439	90-153-155-157-159-161
25-26543	REC333572	90
25-26722	REC302588	90
25-26802	REC303347	90
25-26855	REC3852928	90
25-29439	REC309731	90
25-29845	REC25-29845	165
25-30224	REC25-30224	129
25-30224Q	REC25-30224	90
25-30271	REC25-30271	155-157
25-30529	REC25-30529	90
25-30613	REC25-30613	90-155-157
25-31305	REC553126	90
25-31534	REC25-31534	155-157-163-167-169
25-31986	REC3852866	90

R.O. /OEM	REF	PAG
25-32509	REC304174	90
25-32546	REC25-32546	90-153-159-161
25-33145	REC25-33145	90-155
25-33465	REC25-33465	90-167-171-179
25-33466	REC302537	90
25-33504	REC0307239	90-189
25-33756	REC305123	90
25-35027	REC25-35027	159-161-165
25-35029	REC25-35029	90
25-35276	REC310584	90
25-35480	REC321921	90
25-36318	REC25-36318	163
25-36318	REC301967	90
25-38099	REC25-38099	90-157
25-38101	REC25-38101	90
25-38933	REC25-38933	90
25-39695	REC326849	90
25-457101	REC25-457101	90-165
25-45711	REC326649	90
25-47254	REC310414	90
25-47632	REC0554545	90
25-48171	REC25-48171	90-191
25-48452	REC302035	90
25-54029	REC25-33465	90
25-55801	REC25-55801	90-153
25-58390	REC909140	90
25-60342A2	REC25-60342A2	197
25-62700	REC25-62700	90
25-62704	REC3852045	90
25-62705	REC25-62705	90-165-191
25-62706	REC25-62706	165
25-62707	REC25-62706	90
25-64068	REC333572	90
25-65936	REC331188	90
25-67202	REC25-67202	90
25-67202	REC313175	90
25-70937	REC25-70937	90-153-159-161
25-805331	REC3852865	90-171
25-822370	REC25-33465	167-169
25-823683	REC25-823683	90
25-87400A2	REC25-87400A2	199-200
25-89497	REC25-89497	90
25-90011	REC25-90011	90-157-163
25-94288	REC25-94288	179
25-97387	REC25-97387	90-165
25661T1	PH375-0011	138
26-12224	REC26-12224	90-155-157-163
26-12709	REC26-12709	90
26-127091	REC26-12709	165
26-14077	REC26-76868	90-163
26-14240	REC26-14240	90-91
26-14756	REC26-14756	91
26-16709A2	REC26-16709A2	164
26-16977	REC26-16977	90-155-157
26-20070	REC908855	90
26-23517	REC26-23517	90
26-24590	REC26-24590	90
26-26226	REC310599	90
26-30530	REC26-30530	90
26-30913	REC26-30913	90
26-31249	REC26-24590	90
26-32511	REC26-32511	90-153
26-32511A1	REC26-32511A1	152
26-32911	REC26-32911	90
26-33144A2	REC26-33144A2	154-156
26-33467	REC26-33467	90
26-34217	REC26-34217	90
26-36556	REC26-36556	167-169
26-36557	REC26-36557	153
26-38970	REC26-38970	155-156
26-416071	REC26-8M2005029	185-190
26-41953	REC26-419533	90
26-43035	REC26-43035	90
26-43036	REC26-43036	90
26-43993	REC26-43993	90
26-45577 1	REC26-455771	90-157
26-45577-1	REC26-455771	163-171-248
26-455771	REC26-455771	155-167-169
26-45587	REC26-45587	90
26-48443	REC26-48443	90
26-54925	REC26-54925	185
26-55682	REC26-55682	90-185
26-56397	REC26-56397	90
26-56788	REC26-56788	90
26-62818	REC26-62818	90
26-64818Q4	REC27-64818Q4	152
26-66302	REC26-66302	90-159-161-163
26-67388	REC26-67388	90-91-92
26-69188	REC26-69188	90
26-69189	REC26-69189	90
26-6977	REC26-16977	90
26-70081	REC26-70081	90
26-72785	REC26-72785	90-179
26-75413	REC26-75624	91
26-75624	REC26-75624	91-92
26-75980	FEL17740	86-88-91
26-75988	REC26-75988	90

R.O. /OEM	REF	PAG
26-76868	REC26-76868	90-155-157-167-169
26-76868A04	REC26-76868A04	166-168-170
26-79831	REC26-79831	90
26-805080	REC26-861694	90
26-805344	REC26-805344	167-169-171
26-807006	REC26-807006	90-165
26-811554	REC26-811554	91
26-814622	FELBS40013	91
26-816464-1	REC26-8164641	163
26-8164641	REC26-8164641	90-155-157
26-816575A2	REC26-816575A2	163
26-816575A3	REC26-816575A3	162
26-821092	REC26-821092	90
26-8219471	REC26-8219471	91
26-823894	REC26-823894	90-153-159-161
26-861694	REC26-861694	171
26-864319	REC26-864319	161-163
26-88397	REC26-88397	159-161
26-88397A1	REC26-88397A1	158-160
26-88416	REC26-88416	185-190
26-892361	REC26-24590	90
26-89238	REC26-89238	90-155-157
26-8M0033407	REC26-8M0033407	171
26-8M0050563	REC70817B	91
26-90562	REC26-90562	90-179
26-90925	REC26-90925	91-92
26-94038	REC26-94038	90
26-96063	REC26-897153	90
26-965031	REC26-965031	90-153
26-97664	REC70817B	91
26-976641	REC70817B	91
27-12732	REC27-12732	206
27-13709	REC27-13709	93
27-14250	REC27-14250	89
27-18272	REC27-18272	99-123
27-33179Q02	REC27-33179Q02	130
27-33395	FEL17420	80-82-107-109-111-125
27-33395	REC27-33395	107-109-111-114-125
27-33956	REC27-33956	133
27-34213	REC27-34213	219-220
27-34486-3	REC27-344861	229
27-34895A2	REC27-34895A2	89
27-34897	REC27-34897	133
27-34898	REC27-34898	220
27-35898T	REC27-35898T	93
27-39915	REC27-39915	93-123
27-39917	REC27-39917	93-123
27-39923	BAMC47-27-39923	93-123
27-40431	REC27-480431	115
27-41609	REC27-41609	206-208
27-41812	REC27-41812Q	130
27-418122	REC27-418122	130
27-41812Q	REC27-41812Q	130
27-41813	REC27-863724Q	124
27-42457	REC27-42457	220
27-42631-1	REC27-426311	157
27-430331	REC27-430331	163
27-43186A1	REC27-43186A1	92
27-46401	FEL17319	76-100-124
27-46820	FEL17440	86-113-125
27-46820	REC27-46820	113-114-125
27-47510Q	REC27-47510Q	129
27-47590-1	REC27-475901	130
27-47644-1	REC27-47644-1	184
27-48042	REC27-48042	114-124
27-480431	REC27-480431	95-100-109-114-123
27-48399	REC27-48399	205-209
27-48818Q01	REC27-48818Q01	130
27-49110	REC27-49110	133
27-49953	REC27-49953	89
27-524572	REC27-524572	206-208-209-210
27-52546	FEL17300	75-93-124
27-52546	REC27-52546	93-124
27-53045Q01	REC27-53045Q01	130
27-53354	FEL17301	75-95-124
27-53354	REC27-53354	95-124
27-54014Q1	REC27-54014Q1	193-249
27-54506	REC27-54506	130
27-54529	REC27-54529	89
27-54529A1	REC27-54529A1	89
27-55810 1	REC27-558101	153
27-56108	REC27-56108	89
27-56880	REC27-56880	133
27-58764	REC27-58764	100-206
27-60208	REC27-60208Q	130
27-60715	REC27-60715	206-209
27-64692	REC27-64692	95-97-124-206-208-209
27-64718A1	REC27-64818Q4	152
27-64818Q4	REC27-64818Q4	189-193
27-65577	REC27-65577	206
27-684547A02	REC270	105-107
27-68714	REC27-68714A6	89-242-243
27-68715	REC27-68715	93-99-124
27-70142	REC27-70142	206-208

R.O. /OEM	REF	PAG
27-70143	REC27-8079821	124
27-701431	REC27-8079821	124
27-70905	REC27-70905	93
27-72805	REC27-72805	220
27-73666	REC27-73666	93
27-73866	FEL17460	83-79-125
27-73866	REC3852455	115
27-73866	REC3852455	125
27-74830	REC27-74830	130
27-74830A3	REC27-74830A3	92
27-75450	REC27-75450	123
27-8052151	REC27-8052151	179
27-805396	REC27-805396	205
27-805760	REC27-805760	229
27-807218	REC27-807218	95-97-100-123
27-807982	REC27-8079821	124
27-8079821	REC27-8079821	97-98-124-208-209-210
27-8146801	REC27-8146801	129
27-815528	FEL17304	75-98-124
27-815528	REC27-815528	98-124
27-8172771	REC27-8172771	163
27-818832	REC27-863726	124
27-85046	REC27-850456	89
27-856081	REC27-856081	155-157
27-856704	REC27-856704	155
27-856705	REC27-856705	99-123
27-858524	REC27-858524	155-157
27-860232	REC27-863726	124
27-860233	REC27-863724Q	124
27-863724	REC27-863724Q	124
27-863724Q	REC27-863724Q	103-111-113-124
27-8637251	REC27-8637251	103-111-113-124
27-863726	REC27-863726	103-111-113-124
27-864547A02	REC270	104-107-124
27-864549A02	REC270	124
27-864550A02	REC270	124
27-871051	REC27-863726	124
27-89656-1	REC27-89656-1	130
27-896561	REC27-89656-1	99
27-8M2021920	REC27-33918	130
27-94914	REC27-94914	179
27-94996Q2	REC27-94996Q2	158-160-189-193-248-249
27-96429	REC27-96429	97-124
27-97542	REC27-856705	123
27-988231	REC27-988231	185-190
27-995061	REC27-995061	185
27-99757	FEL17410	78-101-103-105-124
27-99757	REC27-99757	101-103-105-124
27-997771	REC27-99777Q02	123
27-997772	REC27-99777Q02	123
27-99777Q02	REC27-99777Q02	95-97-98-100-109-115-123
27-99960	REC27-99960	123
28-30281	REC28-30281	155-157
28-8M0032833	REC28-8M0032833	163
28-8M0032834	REC8M0032834	155
30-72961	REC30-72961	179
30-879194A01	REC30-879194A01	184-185-190
30-88957T	REC30-88957T	155-157
30-88957T1	REC30-88957T	163
30-98475T1	REC30-98475T1	128
31-15842	REC31-15842	163
31-15844	REC31-15844	163
31-30894A1	REC31-30894A1	163
31-30894A5	REC31-30894A5	161
31-30895T	REC31-30895T	155-157-163
31-30956T	REC387247	155-157-163
31-32573A1	REC31-32573A1	153-159-161
31-32575T1	REC31-32575T1	153-159-161
31-33138A1	REC31-33138A1	163
31-35928T1	REC31-35928T1	155-157-163
31-35988A12	REC31-35988A12	153-159
31-35990A1	REC31-35990A1	153-159-161
31-36387A1	REC31-36387A1	157-163
31-42647A1	REC387817	157-163
31-53079A1	REC31-53079A1	155
31-54042T	REC31-54042T	167-169
31-61100A1	REC31-61100A1	153-159
31-66668A1	REC31-66668A1	169
31-66818A1	REC31-66818A1	153
31-814653	REC31-814653T	163
31-815480	REC31-815480	163
31-815900	REC31-815900	165
31-828437A2	REC31-828437A2	157-163
31-828439A2	REC31-828439A2	163
31-86748A1	REC31-86748A1	167-169-171
31-86752A1	REC31-86752A1	167-169-171
31-86754T	REC31-86754T	167-169
31-86763A04	RM31-86763A04	165
31-86763A2	REC31-86763A2	165
31-86771	REC31-86771	165
31-87156	REC31-87156	165
31-92366A1	REC31-92366A1	155
31-99328A1	REC31-66668A1	167-171
31640A4	CM31640	182
31640A4	CM31640A	182-155-157

R.O. /OEM	REF	PAG
31640Q4	CM31640	155-157
32-14358	CEF500508K	125
32-14358	REC32-14358001	125
32-14358001	CEF500508K	125
32-14358001	REC32-14358001	101-103-105-107-111-113-125
32-14358T	CEF500508K	125
32-14358T	REC32-14358001	125
32-16012	REC32-16012	241-242
32-16021 1	REC32-160211	240-241-242
32-32461	REC32-32461	185-189-239
32-32461A1	REC32-32461	239-249
32-33189	REC32-33189	239-241-242-243
32-33220	REC32-33220	240
32-3322070	REC32-33220	240
32-4172533	REC32-4172533	185-189-239
32-43437	REC32-43437	190-239-249
32-44348	CEF500507K	125
32-44348	REC32-44348001	125
32-44348001	CEF500507K	125
32-44348001	REC32-44348001	97-98-101-103-105-107-111-113-125
32-44348T	CEF500507K	125
32-44348T	REC32-44348001	125
32-47640	REC32-8M0071007	239
32-48132	REC32-48132	240-242-243
32-52481	REC32-52481	239-240-241-242
32-54236	REC32-54236	153
32-55816	REC32-55816	201
32-58432A2	REC32-58432A2	197-201
32-59841	REC32-59841	197-201
32-59842	REC32-59842	197-201
32-805375	RM32-805375	239-244
32-806209-1	RM32-806209-1	241
32-8066351	REC32-8066351	240-241-242-243
32-8066361	REC32-8066361	240-241-242-243
32-806856	REC32-806856	241-242-243
32-807407	REC32-807407	241
32-807458T	CEF500532K	125
32-807458T	REC32-807458T	125
32-807661	REC32-807661	241-242
32-807697	REC32-807697	240-242-243
32-808033	REC32-808033	241
32-808044-1	REC32-8080441	239
32-8600891	REC32-8600891	240-243
32-860144	RM32-860144	241-242
32-860205	REC32-860205	239-242-243
32-860220	REC32-860220	159-161
32-860331	RM32-860331	241
32-86036	REC32-86036	197-201
32-86036Q	REC32-86036	201
32-861057	RM32-861057	240
32-861058	RM32-861058	240
32-861127	REC32-861127	198-199-200-201
32-861128	REC32-861128	198-199-200-201
32-862124	REC32-862124	241
32-862139	REC32-862139	240
32-864588	REC32-864588	198-200-201
32-864589	REC32-864589	198-200-201
32-864959	REC32-864959	198-199-201
32-864960	REC32-864960	198-199-201
32-87117	REC32-871171	240
32-87117 1	REC32-871171	240
32-87234	REC32-87234	201
32-87235	REC32-87235	201
32-88795	REC32-88795	239
32-887952	REC32-887952	239-242
32-89653	REC32-89653	239
32-897181	REC32-897181	239-242-243
32-897301	REC32-897301	240-242-243
32-89749-1	REC32-897491	240-242-243
32-8M0062309	REC32-4172533	239
32-8M0062614	REC32-33220	240
32-8M0071007	REC32-8M0071007	239
32-90949T	CEF500511K	125
32-90949T	REC32-90949T	97-99-103-111-113-125
32-95858	REC32-861127	201
32-95859	REC32-861128	201
32-96246A4	REC32-96246A4	241-242
32-96879	REC32-8M0071007	239
32-99902	REC32-864589	201
32-99902-1	REC32-864960	201
32-99903	REC32-864588	201
32-99903-1	REC32-864959	201
32-99904	REC32-99904	201
32-99904Q	REC32-99904	198-199-200
32193A2	REC1463-9382	231
32734A3	CEF500512K	195
32734A3	REC18654A1	195
33-55816	REC32-55816	197
3302-804689	REC3302-804689	205-208-209-210
3302-804844002	REC3302-804844002	207-208-209-225
3302-804845	REC3302-804845	207
3302-9031	REC3302-9031	205
3302-9033	REC35-53336	142
3302-9407	REC3302-9407	205-209
3302-9437	REC3302-804845	207

R.O. /OEM	REF	PAG
3304-9354A2	REC3304-9354A2	202
3310-804624R1	REC1347-816373A4	204
3310-806969A1	REC807262R02	203
3310-806969R01	REC807262R02	203
3310-807312A1	REC3310-807312A1	203
3310-807312R02	REC3310-807312A1	203
3310-861245A1	REC3310-864943A01	204
3310-861448A1	REC3310-864942A01	204
3310-864941A01	REC3310-864941A01	204-208
3310-864942A01	REC3310-864942A01	204
3310-864943A01	REC3310-864943A01	204
3310-866142A04	REC3310-866142A04	204-208
3310-866143A03	REC3310-866143A03	204-208
3310-8M0047212	REC807262R02	203
33662Q	REC33662	224
33765T	REC33765T	221
34127T2	CM34127	182-249
34127T2	CM34127A	182
34235A1	REC3423A1	224
34235Q1	REC3423A1	224
34235T	REC34235T	223
34762A1	CM34762	182
34762A1	CM34762A	182
34765A2	REC34765A2	195
35-11004A1	REC35-8M0046752	142
35-16595Q	REC3850559	146
35-16595T1	REC3850559	146
35-19485	REC127695-35150	146
35-19486	REC35-19486	143
35-19487	REC35-19487	147
35-49088A2	REC35-49088A2	142
35-49088Q2	REC35-49088A2	142
35-52731	REC3850559	146
35-53336	REC35-53336	142
35-53336Q	REC35-53336	142
35-60494A4	REC24950	140
35-802886Q	REC35-06007	143
35-802893Q01	RACPFF5510	140
35-802893Q01	REC24942	140
35-802893Q01	REC35-802893Q	140-247-248
35-802893Q01	REC35-802893Q01	140-245-246
35-802893Q01	REC855686	140
35-802893Q01	RM35-802893Q	140
35-802893Q4	RAC320R-RAC-02	140-141
35-803470	REC3517857	146
35-803897Q1	REC35-8M0046752	142
35-80470Q	REC3517857	146
35-805312	REC35-805312	147
35-805809	REC35-805809	147
35-805809T	REC35-805809	147
35-807256T	REC35-807256	143
35-808275	REC35-808275	143
35-809097	LENS3213	141
35-809097	RACS3213	141
35-809099	RACS3214	141
35-809101	RACS3220UL	140-141
35-815419	REC016940	146
35-816168	REC35-816168	147
35-863829	RM35-863829	143
35-864572	REC864572	142
35-866171A01	REC35-866171A01	142-246-248
35-866340Q03	REC35-06003	143-245-246-247-248
35-866340Q03	RM35-866340Q02	143
35-866594K01	RM35-866594Q01	140
35-866594Q01	RM35-866594Q01	140
35-879172104	REC35-879172104	144
35-883702Q	REC35-06004	143-245-246
35-883702Q	RM35-883702Q	143
35-884380T	RAC31871	142
35-884380T	REC35-8M0122423	142
35-886638	LENS3227	141
35-886638	RACS3227	141
35-892665	REC35-892665	142-246-247-248
35-8M0020349	RAC31871	142
35-8M0020349	REC35-8M0122423	142
35-8M0046752	REC35-8M0046752	142
35-8M0060041	RAC31871	142
35-8M0060041	REC35-8M0122423	142
35-8M2001030	RM35-8M2001030	143
35-93568	REC93568	142
36-97335	REC3853341	82-91
36223A1	CEF500522K	195
36223A1	REC36223A2	195
36223A2	CEF500522K	195
36223A2	REC36223A2	195
39-74381A1	REC39-74381A1	92
39-75423	REC39-75423	92
391-5075	REC982209	221
391-5075Q1	REC982209	221
391-5088	REC89825302	222
391-5090	REC391-5090	223
391-5090A1	REC391-5090Q1	224
391-5090Q1	REC391-5090Q1	224
391-5092	REC8M6001217	224
391-5093	REC8M6001217	224
391-7057	REC89825302	222
391-7057T	REC89825302	222

R.O. /OEM	REF	PAG
391-898253001	REC8M6001217	224
391-898253004	REC391-5090	223
392-6316	REC392-6316	230
392-6318	REC835702	221
392-6318T	REC835702	221
392-6324	REC8M6001249	223
392-6324A1	REC392-6324Q1	224
392-6324Q1	REC392-6324Q1	224
392-6324T1	REC392-6324Q1	224
392-6325	REC8M6001219	223
392-6325A1	REC392-6325Q1	224
392-6325Q1	REC392-6325Q1	224
392-6325T1	REC392-6325Q1	224
392-6326	REC834975	223
392-6326T	REC834975	223
392-6330	REC392-6330	230
392-7803A4	REC300-00879	231
392-805570A2	REC300-00879	229-231
392-806529A1	REC1463-9382	231
392-863704T	REC3861985	231
392-881732	REC3861267	231
392-889925	REC3859078	231
392-898223002	REC8M6001249	223
392-898253005	REC8M6001219	223
392-8M0054588	REC3861985	228
392-9086	REC392-9086T	221
392-9086T	REC392-9086T	221
392-9089	REC3853801	223
392-9089Q	REC3853801	223
392-9089T	REC3853801	223
392-9766	REC392-9766	221
392-9766Q1	REC392-9766	221
392-9766T	REC392-9766	221
392-9767	REC3853801	223
393-3230	REC393-4988	221
393-3230	REC393-9459Q1	222
393-4988	REC393-4988	221
393-4988T	REC393-4988	221
393-4988T	REC393-9459Q1	222
393-4988T2	REC393-4988	221
393-4988T2	REC393-9459Q1	222
393-9459Q1	REC393-9459Q1	222
41141A2	REC862077A1	219
414336A6	PH200-T016-SK	137
41629A2	RM45-41629A2	167
41641A8	REC41641A8	167-169
41646A9	RM41646A9	191
41674T	REC41674T	190
42260A6	RM42260A6	185
42419A1	PH200-T066	138
42724A3	REC42724A3	153
42815A6	RM42815A6	189
43-14063A1	RM43-14063A1	167-169
43-18411A2	REC43-18411A2	153-159
43-18411A4	REC43-18411A2	152-158
43-45814A5	REC43-45814A5	153-159
43-55778A3	REC43-55778A3	153-159
43-66773A3	RM43-66773A3	153
43-75325A3	REC43-75325A3	153-159
43-818807	REC43-818807	229
43-828073A1	REC43-828073A1	157-163
43-853592A2	REC43-878617A2	163
43-853640A2	REC43-853640A2	161
43-853641A2	REC43-853641A2	161
43-853642A2	REC43-853642A2	161
43-853643A2	REC43-853643A2	161
43-878087A2	REC43-878087A2	162-163
43-887903A1	RM43-887903A1	165
43-887906A1	RM43-887906A1	165
43-887909A1	RM43-887909A1	165
43433 + 43436 + 10-20518	REC02644	186-196
43557A1	REC805759Q01	221
43881A17	RM43881A17	190
43994A2	CM43994	183
43994A2	CM821631	183
43994A2	CM821631A	183
44-41630T	RM44-41630T	167-169
44-8146061	REC44-8146061	157
44-824110	REC44-824110	155-157-163
44-850308	REC44-850308	163
44-850308	RM44-41630T	167
44-865322T	RM44-865322T	171
44181A1	RM44181A1	92
44182A1	FEDV-1984	92
44182A1	RM44182A1	92
44266T	RM807130A4	122
44266T1	RM807130A4	122
44354A3	HOT20976	118
44354A3	MAR988	118
45-41629A2	RM45-41629A2	169
45-41939F1	REC45-41939F1	155
45-42634	REC45-42634	157
45-55796	REC45-55796	153
45-55796-1	REC45-557961	159
45-557961	REC45-557961	161
45-812773	RM45-812773T	165
45-816919	REC45-816919	163

R.O. /OEM	REF	PAG
45-853648	REC45-853648	163
45518A3	REC45518A3	189-196
45518T1	REC45518T1	188-196
45589A3	REC45589A3	189-196
45706A14	REC45706A14	197
46-44292Q03	REC46-44292Q03	157-176
46-48748A1	REC46-48748T1	176
46-48748T1	REC46-48748T1	176
46-59112A2	REC46-72774A32	133
46-60367A1	REC46-96148A8	177
46-63450A2	REC46-72774A32	133
46-64141A11	REC46-64141A11	154-176
46-72774A11	REC46-72774A32	133
46-72774A32	REC46-72774A32	133
46-72774A69	RM46-807151A8	132
46-73823A7	REC46-72774A32	133
46-807151A12	REC46-72774A32	133
46-807151A14	REC46-807151A14	179
46-807151A8	RM46-807151A8	132
46-807151A9	REC46-807151A9	133
46-862914T10	REC46-862914T10	133
46-879194401	REC879194401	132
46-94913A5	REC46-94913A5	179
46-96148A5	REC46-96148A8	177
46-96148A8	REC12120	156-176
46-96148A8	REC46-96148A8	177
46-96148T1	REC46-96148T1	154-156
46020T02	REC46020T02	153-159
46399A1	CM46399	182
46399A1	CM46399A	182
47-43026Q02	REC47-43026Q02	163-175-249
47-43026Q06	REC47-43026Q06	177-248
47-43026Q06	RECMC00004	177
47-59362A4	REC47-59362A4	178
47-59362Q01	REC47-59362Q01	175-179-132-133-245-246-247
47-59362Q08	REC47-59362Q08	178
47-59362T5	REC47-59362T5	178
47-59362T6	REC47-59362T6	178
47-801332602	REC3841697	175
47-809866T	REC47-809866T	175
47-816814T	REC3593573	175
47-831311350	REC47-809866T	175
47-853126	REC15000K	175
47-862232A2	REC47-862232A2	133-175-245-246-247-248
47-89984Q5	REC47-89984Q5	154-156-177-248-249
47-89984T4	CEF500313G	175
47-89984T4	REC47-89984T4	154-156-175-249
47441A1	REC47441A1	129
47442A1	REC8M0061068	129
47587A2	BAMC29-47587	127
47638A1	BA1-47638	93-123
47735A1	BAMC1-47735	117
47735A17	BAMC1-47735	114-117
47736A17	BAMC1-47736	114-117
47737A1	BAMC1-47737	114-117
47737A10	BAMC1-47737	117
47738A1	BAMC1-47738	114-117
47738A10	BAMC1-47738	117
47877A4	BAMC20-76668	119
48-13700A46	SOL1511-153-19	251
48-13700A46	SOL1571-153-19	251
48-13701A46	SOL1512-153-19	251
48-13701A46	SOL1572-153-19	251
48-13702A46	SOL1511-153-21	251
48-13702A46	SOL1571-150-21	251
48-13703A46	SOL1512-153-21	251
48-13703A46	SOL1572-150-21	251
48-13704A46	SOL1511-153-23	251
48-13704A46	SOL1571-148-23	251
48-13705A46	SOL1571-148-23	251
48-13706A46	SOL1571-145-25	251
48-13707A46	SOL1572-145-25	251
48-16312A46	SOL1531-145-15	251
48-16314A46	SOL1531-143-17	251
48-16314A46	SOL1551-148-16	251
48-16315A46	SOL1532-143-17	251
48-16315A46	SOL1552-148-16	251
48-16316A46	SOL1531-140-19	251
48-16316A46	SOL1551-148-18	251
48-16317A46	SOL1532-140-19	251
48-16317A46	SOL1552-148-18	251
48-16318A46	SOL1531-140-21	251
48-16318A46	SOL1551-148-20	251
48-16319A46	SOL1532-140-21	251
48-16319A46	SOL1552-148-20	251
48-16320A46	SOL1531-140-23	251
48-16320A46	SOL1551-143-22	251
48-16321A46	SOL1532-140-23	251
48-16321A46	SOL1552-143-22	251
48-16322A46	SOL1531-140-25	251
48-16322A46	SOL1551-140-24	251
48-16543A46	SOL1552-148-19	251
48-16544A46	SOL1551-148-19	251
48-16545A46	SOL1552-145-21	251
48-16546A46	SOL1551-145-21	251
48-16547A46	SOL1552-143-22	251

R.O. /OEM	REF	PAG
48-16548A46	SOL1551-143-22	251
48-16549A46	SOL1552-140-24	251
48-16550A46	SOL1551-140-24	251
48-18278A46	SOL1511-155-17	251
48-18278A46	SOL1571-155-17	251
48-18610A40	SOL1641-193-15	251
48-18610A6	SOL1641-193-15	251
48-18611A40	SOL1642-193-15	251
48-18611A6	SOL1642-193-15	251
48-18612A40	SOL1641-188-17	251
48-18612A6	SOL1641-188-17	251
48-18613A40	SOL1642-188-17	251
48-18613A6	SOL1642-188-17	251
48-18614A40	SOL1611-193-15	251
48-18614A40	SOL1641-183-19	251
48-18614A6	SOL1611-193-15	251
48-18614A6	SOL1641-183-19	251
48-18615A40	SOL1612-193-15	251
48-18615A40	SOL1642-183-19	251
48-18615A6	SOL1612-193-15	251
48-18615A6	SOL1642-183-19	251
48-18616A40	SOL1611-188-17	251
48-18616A40	SOL1641-178-21	251
48-18616A6	SOL1611-188-17	251
48-18616A6	SOL1641-178-21	251
48-18617A40	SOL1612-188-17	251
48-18617A40	SOL1642-178-21	251
48-18617A6	SOL1612-188-17	251
48-18617A6	SOL1642-178-21	251
48-18618A40	SOL1611-183-19	251
48-18618A40	SOL1641-175-23	251
48-18618A6	SOL1611-183-19	251
48-18618A6	SOL1641-175-23	251
48-18619A40	SOL1612-183-19	251
48-18619A40	SOL1642-175-23	251
48-18619A6	SOL1612-183-19	251
48-18619A6	SOL1642-175-23	251
48-18620A40	SOL1611-178-21	251
48-18620A40	SOL1641-175-23	251
48-18620A6	SOL1611-178-21	251
48-18620A6	SOL1641-173-25	251
48-18621A40	SOL1612-178-21	251
48-18621A40	SOL1642-173-25	251
48-18621A6	SOL1612-178-21	251
48-18621A6	SOL1642-173-25	251
48-19838A46	SOL1511-158-15	251
48-19841A46	SOL1512-158-15	251
48-78114A45	SOL1511-160-13	251
48-78114A45	SOL1531-156-13	251
48-78116A4	SOL1511-150-15	251
48-78116A4	SOL1513-148-15	251
48-78116A4	SOL1531-145-15	251
48-78126A45	SOL1531-140-25	251
48-826072A46	SOL1511-160-13	251
48-831850A45	SOL1513-145-17	251
48-832828A45	SOL1511-148-17	251
48-832828A45	SOL1513-145-17	251
48-832828A45	SOL1531-143-17	251
48-832830A45	SOL1511-145-19	251
48-832830A45	SOL1513-143-19	251
48-832830A45	SOL1531-140-19	251
48-832832A45	SOL1511-143-21	251
48-832832A45	SOL1513-140-21	251
48-832832A45	SOL1531-140-21	251
48-832834A45	SOL1511-142-23	251
48-832834A45	SOL1513-140-23	251
48-832834A45	SOL1531-140-23	251
48-834851A45	SOL1514-145-17	251
48-834852A45	SOL1513-143-19	251
48-834853A45	SOL1514-143-19	251
48-834854A45	SOL1513-140-21	251
48-834855A45	SOL1514-140-21	251
48-90159A46	SOL1512-155-17	251
48-90159A46	SOL1572-155-17	251
48101A1	BAMC20-72963	118
48752T	REC48752T	154-156
50-12782	PH140-0004	134
50-47454	PH140-0022	135
50-56886	PH140-0004	134
50-65785A1	PH140-0022	135
50-69865A1	PH140-0004	134
50-72550A2	PH140-0022	135
50-79604A3	PH140-0022	135
50-805991	PH150-0008	135
50-806963A2	PH140-0020	134
50-806965A2	PH140-0020-D	134
50-806965A4	PH140-0013	135
50-806965A4	PH140-0020	134
50-806965A4	PH140-0020-D	134
50-807907	PH140-0017-HD	134
50-808011A05	PH140-0022-CCW	135
50-80811A4	PH140-0022-CCW	135
50-812429A2	PH140-0020-D	134
50-863007A1	PH140-0017-D	134
50-863007A1	PH140-0020	134
50-864340A2	PH140-0015	134
50-864340A2	PH140-0017-HD	134
50-864340A2	PH140-0017-HT	134

R.O. /OEM	REF	PAG
50-88671A1	PH140-0022-CCW	135
50-8M0090697	PH140-0020-D	134
50-99417A2	PH140-0013	135
50-99418A2	PH140-0015	134
52-853594T	REC52-853594T	155-157-163
52-865344A01	RM52-865344A01	165
53-23720	REC53-23720	179
53-29641	REC53-29641	157-163
53-805272	REC53-805272	200
53-815949	REC53-815949	199-248
53-87843	RM53-87843	188-191-244
53-88242	REC53-88242	167-169-171
53114A1	CEF500524	125
53114A1	REC53114A1	95-100-125
54-12078	RM54-12078	187-192
54-38863	REC54-38863	185-190-195
54-815504256	GS38320	97-98-103-111-113
54-815504272	GS38320	107
54-815504320	REC54-815504320	185-190-195-248
54-815504372	GS38320	97
54-815504372	GS38322	97-101-103-111-113
54-815504412	REC54-815504412	189
54-815504456	GS38310	105-107
54-815504456	GS38320	105
54-86049	REC54-86049	189-191-195
55131A5	REC55131A5	128
55538A2	BAMC-20-55538	93-119-123
55989A9	CM55989	182
55989A9	CM55989A	182-184
55989Q9	CM55989	184
57-13457Q	REC57-13457Q	235-236-237-246
57-13458Q	REC966931	235-236
57-32850	REC3852106	235
57-34359	REC57-34359	235
57-36356	REC57-36356	235
57-37619Q	REC57-34359	235
57-37619T	REC57-34359	235
57-45856	REC3858462	235
57-48120Q1	REC829207	235-236-245-256
57-48122Q	REC57-48122Q	235-236-237
57-49043A1	REC57-49043A1	235
57-49211	REC57-64416	235
57-49213A1	REC3858462	235
57-52692	REC57-52692	235
57-64032Q1	REC57-49043A1	235
57-64416	REC57-64416	235
57-65607T	REC57-65607Q	235-245
57-69143Q	REC3852106	235
57-74271Q	REC966903	235-236
57-77274	REC966900	235
57-78200Q1	REC57-78200Q1	235-236
57-807755Q04	REC57-807755Q04	237-238
57-807755Q05	REC57-807755Q05	237-238
57-816295Q	REC57-816295Q	235-236-245
57-817113	REC57-817113	237-238
57-861049Q	REC57-861049Q	237-238
57-861757Q	REC57-861757Q	237-238
57-861758Q	REC57-861758Q	237-238
57-861759Q	REC57-861759Q	237
57-865615005	REC57-865615Q05	237
57-865615010	REC57-865615Q10	237
57-865615Q01	REC57-865615Q01	237-238
57-865615Q02	REC57-865615Q02	237-238
57-865615Q03	REC57-865615Q03	237-238-245-246
57-865615Q04	REC57-865615Q04	237-245-246
57-865615Q06	REC57-865615Q06	237-238
57-865615Q07	REC57-865615Q07	237-238
57-865615Q08	REC57-865615Q08	237-238-245-246
57-865615Q09	REC57-865615Q09	237-238-245-246
57-91035Q1	REC57-91035Q1	235-236
57-93658Q	REC3858462	235
58217Q	REC58217	222
58759A1	BAMC-1-58759	116
58759A10	BAMC-1-58759	116
58759A13	BAMC-1-58759	116
58759A14	BAMC-1-58759	100-116-121-123-124
59078Q3	REC59078Q3	131-245
59498A1	BAMC29-59498	129
59501A1	REC59501A1	179
59826A3	REC59826A3	194
59830A7	REC59830A7	153-159-161
6-6010000CP	TRANSONALPHAI	185
6-6111002LP	TRANSONALPHA2G	185
6-6211002NZ	TRANSONBRAVO	192
6-6311002NZ	TRANSONBRAVO	192
60252A2	REC60252A2	95-97-100-109-115-123
60372A1	BAMC29-60372	129
60372A2	BAMC29-60372	129
60426A1	HOT20971	119
60932A1	CEF500516K	195
60932A1	REC60932A4	195
60932A4	CEF500516K	195
60932A4	REC60932A4	189-195
61811A3	BAMC20-61811A4	121
61811A4	BAMC20-61811A4	121

R.O. /OEM	REF	PAG
61851A3	BAMC20-61851A3	100-109-115-121
62092T	REC62092T	219
62898A1	BAMC29-62898	129
63122A10	BAMC-1-63122	93-116
63122A13	BAMC-1-63122	93-116
63122A14	BAMC-1-63122	93-116
63588A1	BAMC29-63588	128
65057A1	PH375-0031	138
65057T1	PH375-0031	138
65533A1	REC65533A1	185
65603A12	HOT20962	115-118
65603A3	HOT20962	118-123-125
65604A12	HOT20958	115-118
65604A4	HOT20958	118
66081A2	REC66081A2	153-159-161
66668A1	REC31-66668A1	167
68521A3	REC17177A1	230
68521A4	REC17177A1	230
69354A2	REC69354A2	92-194
70125A02	REC70125A02	210
70125A1	REC70125A02	210
70981A3	CEF500523	125
70981A3	REC70981A3	97-99-103-109-111-113-125
71464A01	REC71464A01	210
72608T	MP425149	126
72963A1	BAMC20-72963	118
72963A9	BAMC20-72963	114-118
72964A1	BAMC20-76668	119
73813A1	HGE4870	93-95-97-100-109-114-115-123
73873A1	REC73873A1	186
74639Q02	CEF500513K	195
74639Q02	REC74639Q02	185-190-195-249
74905A3	REC17177A1	230
75832T	REC75832T	153-159
75832T1	REC3850812	153-159
76214-4	CM762144	182
76214-4	CM762144A	182
76214-4	TEN00835	181
76214-5	TEN00820	181
76214A2	CM762144	169
76214A2	CM762144A	169
76214A2	CM762145	182
76214A2	CM762145A	182
76214Q5	CM762144	171
76214Q5	CM762144A	171
76214Q5	CM762145	163-167-182
76214Q5	CM762145A	163-182
76214Q5	CM76214Q5	182-249
76325A2	REC76325A2	97-100-119-123
76351A04	HGE6351	115
76351A04	HOT20971	95-100-109-115-119
76351A2	HOT20971	119
76514Q5	CM762145A	167
76668A1	BAMC20-76668	119
76668A3	BAMC20-76668	114-119
76771A2	HOT20978	95-109-115
76771A2	REC76771A2	95-109-119-123
76788A1	BAMC20-72963	118
76850A2	REC76850A2	194
77234A2	HOT20950	117
77234A7	HOT20950	109-117
77235A2	HOT20951	117
77235A8	HOT20951	109-117
77442A1	REC77442A1	197
78403A1	PH300-0022	136
78403A2	PH300-0013	136
78403A2	PH300-0022	136
78458A1	CEF500520K	195
78458A1	REC78458A1	191-195-246
78984A08	REC78984A08	127
78984A1	REC78984A08	127
78985A1	BAMC29-78985	128-129
802630T	REC802630T01	214
802630T01	REC802630T01	214
802632T	REC802632T	211
802632T	REC9-33304	211
804483T	REC3854548	222
804626R02	REC804626R02	202
805016A1	REC805016A1	211
805025A2	REC3858261	218
805025A2	REC861155A6	217
805182A1	RM805182A1	171
805185A3	REC805185A3	230
805185A36	REC805185A36	229-230
805185A37	REC805185A3	229
805217A1	REC3850396	212
805218T	REC3850397	213
805222A1	REC805222A1	230
805223T	REC805223T	212
805224A1	REC3855194	214-245-216-217
805225A1	REC9-33303	212-215-216-217
805226A1	REC805226A1	213-215-216-217
805227A1	REC805227A1	215-216-217
805265A1	SED3092900	120
805298A1	REC805298A1	211

R.O. /OEM	REF	PAG
805320A03	REC805320A03	187-192-249
805361T2	RM805361T2	232
805361T3	RM805361T3	231
805361T6	RM805361T6	232
805370A1	RM45-41629A2	171
805447T	PH300-0016	136
805536A2	REC805536A2	153-159-161
805544T	REC8M0077616	213
805602A1	SED3092000	120
805602A2	SED3093300	120
805629A1	REC805629A1	97
805629A1	REC805629A1	123
805656A2	REC3858261	218
805656A2	REC861155A6	217
805656A5	REC3858261	218
805656A5	REC861155A6	217
805656A6	REC3858261	218
805656A6	REC861155A6	217
805759A1	REC805759Q01	221
805759A2	REC805759Q01	221
805759A5	REC805759Q01	221
805759Q01	REC805759Q01	221-229
805759T1	REC805759Q01	221
805759T2	REC805759Q01	221
805884T	PH300-0016	136
806031A2	RM806031A2	189
806034A2	RM806034A2	187
806105Q1	CM806105	156-162
806105Q1	CM806105A	156-162
806188A1	CM806105	182
806188A1	CM806105A	182
806188A1	CM806188	166-168-170-182-249
806188A1	CM806188A	166-168-170-182-280
806189Q1	CM806189	182-199-249
806189Q1	CM806189A	182-199
806190A1	CM806190	200
806190A1	CM806190A	200
806190Q1	CM806190	182
806190Q1	CM806190A	182
806191T	REC806191T	199-200
806193A20	RM806193A48	244
806193A38	RM806193A48	244
806193A48	RM806193A48	244
806235A04	HOT20956	116
806490T	REC806490T	213
806612T	REC806612T	213-215-216
806807A1	REC9-33300	212
806867A12	BAMC-1-860235	118
806867A12	HOT20966	118
806867A3	BAMC-1-860235	118
806867A3	HOT20966	118
806867A8	HOT20956	116
806867A8	HOT20956	116
807078A6	HOT20957	117
807078A6	MAR078	117
807078T09	HOT20957	117
807078T09	MAR078	117
807078T10	HOT20957	113-117
807078T10	MAR078	113-117
807130A4	RM807130A4	103-105-107-111-113-122
807151A14	REC46-807151A14	178
807166A1	REC807166A1	103-105-107-111-113-125
807166A3	REC807166A3	126
807252Q3	REC807252Q3	131
807252Q4	REC807252Q4	131
807252Q5	REC807252Q5	131
807252T1	REC8M0089715	131
807252T2	REC8M0091470	131
807252T4	REC807252Q4	131
807262R02	REC807262R02	203
807289A1	REC425062	126
807371T1	RM807371T1	244
807476A6	HOT20908	121
807476A6	MAR3320PAR	121
807652T	PH300-0011	136
807653T	PH300-0012	136
807731T	REC861579	133
807914A1	HOT20976	118
807914A1	MAR988	118
807929A1	REC807929A1	163
807952A1	REC807952A1	215
807964A1	REC807964A1	230
807988A03	HOT20976	101-103-113-118
807988A03	MAR988	101-103-113-118
807988A03	SED3092600	113-120
807988A08	MAR988	111
807988A2	HOT20976	118
807988A2	MAR988	118
807988A3	SED3092600	103
808145T	SHE15979	132-178
808483T3	REC3854548	222
808504T1	REC65L-13915-00	142
809463A1	PH375-0008	139
81-64851	REC64851	224
811536T	REC811536T	205

R.O. /OEM	REF	PAG
811575T	MP425113	126
811635T3	REC3854260	222
811637T	REC3854003	232
811639T	REC3854001	212-227-232
812454A1	REC862048A1	219
812454A3	REC862048A1	219
814263A1	GS38105	193
814604A1	REC814604T1	163
814606 1	REC44-8146061	163
814819A2	REC814819A2	153-159
814819A3	REC59830A7	165
814819A7	REC814819A7	161
815407A2	REC815407A2	222
815407Q02	REC815407A2	222-229
815471T1	REC815471T1	193-249
815919A1	REC815919A1	163
815935A7	REC815935A7	199
815954A7	REC815954A7	199
816148A1	REC17177A1	230
816219A4	RM816219A4	99-116
816219A5	HGE6219-A	99-116-124
816431A1	CEF500515K	195
816431A1	REC816431A1	189-195-248-249
816597A1	REC816597A1	163
816629Q	REC90508-ZW1-003	155
817119A1	PH300-0010	136
817119A4	PH300-0010	136
817119A4	PH300-0022	136
817275A1	RM817275A1	163
817275Q05	REC817275Q05	178-249
817377T	REC817377	230
817378T	REC3854002	231
818349T1	REC818349T1	155-157-163
818383T	REC861677T	220
818763A10	REC818763A10	155-157-163
821125A1	RM821125A1	232
821125T02	RM821125A1	232
821509T01	REC821509	139
821629Q1	CM821629	159-161-182-249
821629Q1	CM821629A	159-161-182
821630A1	CM821630	165-182-249
821630A1	CM821630A	165-182
821630Q1	CM821630	165-182-249
821630Q1	CM821630A	165-182
821631A1	CM43994	183
821631Q	CM821631	190
821631Q	CM821631A	190
821631Q1	CM821631	185
821631Q1	CM821631A	185
822777Q1	CM46399	182
822777Q1	CM46399A	182
823426A1	REC823426A1	207-208-209-210
823427A1	REC823427A1	206
824324T	MP425024	126
824330T	MP425036	126
824330T1	MP425036	126
827682T	REC827682T	218
828151A1	REC882751A1	139
828692A1	REC828692A1	159
828692A1	REC828692A1	161
828830A2	REC828830A2	163
834832T2	PH300-0030	137
84-813720A10	REC15-801	234
84-813720A11	REC15-601	234
84-813720A13	REC15-405	234
84-813720A2	REC15-804	234
84-813720A3	REC15-804	234
84-813720A4	REC15-804	234
84-813720A5	REC15-401	234
84-813720A5	REC15-402	234
84-813720A7	REC15-604	234
84-813720A8	MAG15-602	234
84-813720A8	REC15-801	234
84-813720A9	REC15-801	234
84-816608A1	REC15-815	228-234
84-816761A15	MAG15-803	234
84-816761A15	REC15-804	234
84-816761A17	REC15-804	234
84-816761A2	MAG15-803	234
84-816761A2	REC15-804	234
84-816761A4	REC15-804	234
84-816761A6	MAG15-803	234
84-816761A6	REC15-804	234
84-816761A8	REC15-804	234
84-816761Q13	REC15-405	227
84-816761Q16	REC15-601	227-229
84-816761Q17	REC15-804	227-229
84-816761Q7	REC15-604	234
84-816761Q8	MAG15-602	234
84-8167681A17	REC15-804	234
84-816781A15	MAG15-803	234
84-816781A15	REC15-804	234
84-816781A4	REC15-804	234
84-816878A17	REC15-804	234
84-817376T01	REC84-817376T01	227
84-818781A4	REC15-804	234
84-863656A1	REC15-813	228-234
84-863656A2	REC15-606	228-234

R.O. /OEM	REF	PAG
842725A3	REC8M0073435	220
850484T	REC3854331	222
850484T2	REC3854331	222
8507522 +		
10-31700	REC8507522	186
851956A1	REC853998A1	212
852956A1	REC3858941	211-215
853678T	REC853678T	213
853998A1	REC853998A1	212
853998T	REC853998A1	212
857006A3	PH300-0030	137
85784A1	REC85784A1	211
85785-2	REC805298A1	211
85785A2	REC85785A2	211
85785T	REC805298A1	211
86-865202T	REC86-865202T	139
860235A03	BAMC-1-860235	98-118
860235A03	HOT20966	98-118
860235A04	HOT20956	97
860235A04	HOT20956	97-116
860246A10	HOT20953	117
860246A10	MAR246	117
860246A15	HOT20953	111-117
860246A15	MAR246	111-117
860246A3	HOT20953	117
860246A3	MAR246	117
860246A9	HOT20953	117
860246A9	MAR246	117
860256A4	REC8M0061381	128
860349A1	REC860349A1	215-216-217
861006A1	REC8M0061381	128
861126A1	REC861126A1	215-216-217
861155A2	REC861155A3	217
861155A3	REC861155A3	217
861155A5	REC3858261	218
861155A5	REC861155A6	217
861155A6	REC3858261	218
861155A6	REC861155A6	217
861156A03	REC861156A03	219
861156A04	REC861156A04	219
861156A1	REC861156A1	218
861188A1	REC861188A1	128
861249A1	REC861249A1	212
861260T	REC9-33302	212
861493A07	BAMC29-47587	127
861493A07	BAMC29-60372	129
861493A3	BAMC29-47587	127
861523A9	REC861523A9	194
861676A1	REC8M0073435	220
861676T09	REC8M0073435	220
861677T	REC861677T	220
862030T	PH300-0033	136
862030T01	PH300-0033	136
862031T	PH300-0034	136
862031T1	PH300-0034	136
862048A1	REC862048A1	219
862077A1	REC862077A1	219
862132T	REC862132T	165
86234A3	REC86234A4	219
86234A4	REC86234A4	219
862351T	REC862351T	133
86246A1	REC86246T	219
86246T	REC86246T	219
86247A2	REC86247T	219
86247T	REC86247T	219
862548A1	PH200-T066	138
863077T	PH300-0035	137
86307AR01	PH300-0035	137
863444T1	RM863444T1	129
863457A2	RM863457A2	128
863631T1	RM863631T1	129
864244A2	REC864244A2	165
864281A01	REC864281A1	161
864281A2	REC864281A2	159-160
864282T	REC864282T	161
864297T01	REC864297T01	213
864308T01	HOT20735	117
864308T01	MAR735	117
864309T01	MAR309	118
864309T02	MAR309	105
864309T02	MAR309	107-118
864309T02	SED3095400	105-107-120
864363A1	RM864363A1	186
864364A1	RM864364A1	186
864591T02	HOT20591	105-118
864591T02	HOT20951	107
864591T02	MAR591	105-107-118-124
864591T02	SED3095500	105-107-120
864612T01	MAR612	105-117-121-122-124
86481A2	REC864281A2	161
864856A1	REC3850396	212
864908A1	BAMC-20-864908A1	104-107-122
864929A3	HGE4929	105-107-121
865049T01	HOT20735	117
865049T01	MAR735	117
865328A01	RM865328A01	187
865329A02	REC865329A02	186-194-186-193

R.O. /OEM	REF	PAG
865380A13	PH200-T016	137
865380A13	PH200-T066-K	138
865380A25	PH200-T016	137
865425A03	RM865425A03	165
865436A02	RM19543A10	186-193
865437A02	REC865437A02	186-193
865437A02	REC865437A02	186-193
865491A01	REC864281A1	161
865496A01	REC865496A02	165
865496A02	REC865496A02	161
865503T	REC865503T	161
865735A02	HOT20735	107-117
865735A02	MAR735	117
866136A01	RM866136A01	165-187-192
866169A01	REC866169T01	217
866169T01	REC866169T01	217
866170A01	REC866170A01	217
866200A01	REC806034A1	187-192
86754T	RM86754T	171
86779A1	REC86779A1	165
867988A08	HOT20976	111
86840A05	CEF500509K	195
86840A05	REC86840A05	191-195
86840A3	CEF500509K	195
86840A3	REC86840A05	195
87-71831	REC71831	223
87-76416A1	PH375-0027	138
87-805605A1	REC87-805605A1	214
87-808009A1	RM8M0052936	186
87-808009A2	REC87-808009A2	186
87-808009A3	RM8M0052936	186
87-814281A5	REC87-814281A5	186
87-815425T	REC8M0068784	214
87-864252	REC87-864252	214
87-864252A01	REC87-864252A01	214
87-892150Q02	REC87-892150Q02	229
87-8M0052935	REC87-808009A2	186
87-8M0052936	RM8M0052936	186
87114A19	HOT20953	117
87114A19	MAR246	117
87290A26	REC87290A23	127
87290A4	REC87290A4	128-129
87399A2	REC87399A2	198-200
87399A3	REC87399A3	199
87581T	REC195141	230
879150A87	REC21622232	228-230
879194A01 & A02	REC30-879194A01	190-249
88-11178A01	BS2142	139
88-79023A91	RM88-79023A91	139
88-79023T10	PH365-0003	139
88-93582	BS2143	139
88183A12	PH200-T016	137
88183A12	PH200-T016-SK	137
88243A3	REC88243A3	167-169-171
882751A04	REC882751A04	139
882751A1	REC882751A1	139
882751A2	REC882751A1	139
883166A2	REC883166A2	138
884794A02	REC21622232	230
884794A1	REC21622232	230
8866A64	RM1656-8866A17	167
88751A02	REC40005334	230
888751A03	REC40005334	228-230
888751A1	REC40005334	230
8887562Q02	TENKITALPHAONE/1	154-156-181-249
888756Q01	CMALPHAKITA	183
888756Q01	CMALPHAKITM	183
888756Q01	TENKITALPHAONE/2	181
888756Q02	CMALPHAGEN1KITA	154-156-183-248-249
888756Q02	CMALPHAGEN1KITM	154-156-183-249
888756Q03	CMALPHAKITA	183
888756Q03	CMALPHAKITM	183
888756Q03	TENKITALPHAONE/2	181
888758Q01	CMBRAVO1KITA	166-183-249
888758Q01	CMBRAVO1KITM	166-183-249
888758Q01	TENKITBRAVOI	166-181-249
888761Q01	CMBRAVO2Y3KITA	168-183-249
888761Q01	CMBRAVO2Y3KITM	168-183-249
888761Q01	TENKITBRAVOII-III	168-181-249
888761Q02	CMBRAVO3KITA	170-183-248-249
888761Q02	CMBRAVO3KITM	170-183-249
888761Q02	TENKITBRAVOIII-04	170-181-249
89-18080	PH375-0004	139
89-68258A4	PH375-0028	138
89-805188A1	PH375-0036	138
89-818864	REC89-818864T	138
89-818864T	REC89-818864T	138
89-818997A1	PH375-0034	138
89-818997T1	PH375-0034	138
89-818999A1	PH375-0036	138
89-818999A2	PH375-0036	138
89-853654A1	PH375-0004	139
89-853654A1	PH375-0028	138
89-91975	REC89-96054T	138
89-96054	REC89-96054T	138
89-96054T	REC89-96054T	138
89-96158	PHSEL-239	138

R.O. /OEM	REF	PAG
89-96158T	PHSEL-239	138
89-99253	PH375-0004	139
89011A8	HOT20957	117
89011A8	MAR078	117
891736T	PH200-T015	137
89690T	REC89690T	244
898253T22	REC898253T22	222-228
898253T23	REC898253T23	222-228
898253T24	REC1463-9382	231
898253T27	REC3854002	227-231
89876A3	REC25000	140
8M0020941	REC17-8M0084681	155-157-163
8M0032834	REC8M0032834	157
8M0042641	REC8M0042641	157
8M0051200	REC8M0051200	211-217
8M0054588	REC3861985	231
8M0054726	REC8M0054726	212
8M0058164	REC8M0058164	220
8M0058389	REC22-67892A05	155-157-163-165-167-249
8M0061381	REC8M0061381	128
8M0062084	REC3854311	223
8M0062102	REC8M0062102	190-239
8M0062406	CEF500509K	195
8M0062406	REC86840A05	195
8M0062440	RM8M0062440	192
8M0062568	RM43881A14	185
8M0068784	REC8M0068784	214
8M0069803	REC802630T01	214
8M0073435	REC8M0073435	220
8M0077616	REC8M0077616	213
8M0080805	REC8M0080805	184-185-190-198-199-200
8M0084523	REC882571	137
8M0087834	REC8M0087834	212
8M0089715	REC8M0089715	131
8M0091470	REC8M0091470	131
8M0094406	REC879194401	132
8M0113733	PH600-0004	132
8M0113734	PH600-0005	132
8M0113736	PH600-0003	132
8M0115149	RM807130A4	122
8M2011027	REC8M2011027	155-157-163-167
8M2015937	REC8M2015937	159-161
8M2015938	REC8M2015938	159-161
8M6000623	REC8M6000623	213
8M6001217	REC8M6001217	224
8M6001218	REC33662	224
8M6001219	REC8M6001219	223
8M6001222	REC898253013	222-228
8M6001224	REC89825302	222
8M6001249	REC8M6001249	223
8M6001250	REC391-5090	223
8M6001251	REC58217	222
8M6001252	REC8M6001252	222
8M6001253	REC3854549	223-227
8M6001254	REC3854261	223-227
8M6005225	REC879194401	132
90576A4	REC13524A6	223
90736A24	REC90736A24	127
90746A1	REC805759Q01	221
90880A2	HOT20905	99-119-123
91-12037	REC91-12037	173
91-17256	REC91-17256	174
91-17257T	REC90490	174
91-17273	RM91-17273	173
91-17275A1	RM91-17275A1	173
91-17302	RM91-17302	173
91-31107T	REC91-31107T	173
91-31229	REC91-31229	173
91-31229A7	RM91-31229A7	172
91-34569A1	REC91-34569A1	172
91-36569T	REC91-36569T	172
91-37241	REC91-37241	172
91-43506T	REC91-43506T	174
91-43579	REC91-43579	173
91-45497A1	REC91-45497A1	172
91-56048001	REC91-56048001	174
91-56775T	REC91-56775T	173
91-60523	REC91-60523	174
91-60526T	REC91-60526T	174
91-61067A04	REC91-61067A04	174
91-61069T	REC91-61069T	174
91-61077T	REC91-61077T	173
91-78310	REC91-78310	174
91-8053741	REC90490	174
91-805475A1	REC91-805475A1	173
91-818162	REC91-818162	173
91-850730Q01	REC55005	174
91-859046Q4	REC91-859046Q4	172
91-888863	REC91-888863	227
91823A3	REC17177A1	230
92497A3	PH300-0022	136
93320A10	REC93320A15	110-121
93320A13	HOT20908	103-111-112-121
93320A13	MAR3320PAR	103-111-112-121
93320A15	REC93320A15	121
93320A5	HOT20908	121

R.O. /OEM	REF	PAG
93320A5	MAR3320PAR	121
93322A12	HOT20985	122
93322A12	HOT20985	122
93322A12AV	HOT20985	103-111-112
93322A12AV	HOT20985	103-111-112
94989A6	RM94989A6	185
94998A4	REC94998A4	153
95862A5	BAMC-1-95862	97-116-123-124
96705A1	REC96705A1	95-116-121-123-124
97-257	REC806490T	213
97257A1	REC806490T	213
97258A1	REC97258A1	213
97399A2	REC862048A1	219
97432A2	REC97432A2	92-194
98230A1	REC98230A1	187-192
98504A3	HOT20970	103-111-113-118
98504A3	REC98504A3	103-111-113-118-124
98562A6	HOT20937	99-119-123
98703A26	REC98703A26	200
98703A3	REC98703A3	198
98704A26	REC98704A26	200
98704A3	REC98704A3	198
99155T2	REC99155T2	99-131-246-247-248
99356A1	RM99356A1	244
99356A2	REC99356A2	244
99370A2	REC99370A2	125
99438A1	RM99438A1	244
99746A17	HOT20952	101-103-117
99746A17	MAR746	101-103-117
99746A3	HOT20952	117
99746A3	MAR746	117
99746A8	HOT20952	117
99746A8	MAR746	117
99798A18	HOT20956	116
99798A18	HOT20956	116
F16900148	REC982209	221
FI69000083	REC8M6001249	223
FI6900023	REC8M6001249	223
FI6900031	REC33662	224
FI6900031	REC8M6001219	223
FI6900032	REC8M6001249	223
FI6900040	REC8M6001217	224
FI6900044	REC834975	223
FI6900152	REC97258A1	213
FI6900184	REC835702	221
FI6900185	REC392-9766	221
FI6900186	REC3853801	223
FI6900189	REC8M6001249	223
FI6900190	REC3853801	223
FI6900198	REC97258A1	213
FI6901224	REC89825302	222
GM10482803	REC3858984	232